City: GOLDEN

ROCKY FLATS PLANT (USDOE)

Site Information:

Site Name: ROCKY FLATS PLANT (USDOE)
Address: GOLDEN, CO

EPA ID: CO7890010526
EPA Region: 08

Record of Decision (ROD):

ROD Date: 01/05/1990
Operable Unit: 01
ROD ID: EPA/ROD/R08-90/043

Media: GROUNDWATER

Contaminant: VOCS, PCE, TCE, METALS, CHROMIUM, RADIOACTIVE MATERIALS

Abstract: THE 6,550-ACRE ROCKY FLATS PLANT (DOE) SITE IS A FEDERAL FACILITY, WHICH SERVES AS A NUCLEAR WEAPONS RESEARCH DEVELOPMENT AND PRODUCTION COMPLEX IN JEFFERSON COUNTY, COLORADO. SURROUNDING LAND USE IS PRIMARILY RURAL RESIDENTIAL, ALTHOUGH THERE ARE SOME INDUSTRIAL PROPERTIES NEARBY. THE SITE OVERLIES AN ALLUVIAL/COLLUVIAL AQUIFER, AND A SMALL WETLANDS AREA IS PRESENT WITHIN THE FACILITY BOUNDARIES. SINCE 1951, ONSITE OPERATIONS HAVE INCLUDED THE MANUFACTURE OF NUCLEAR WEAPONS COMPONENTS FROM PLUTONIUM, URANIUM, BERYLLIUM, AND STAINLESS STEEL. THERE ARE TWELVE SITES, DESIGNATED AS SOLID WASTE MANAGEMENT UNITS, WHICH COMPRISE THE 881 HILLSIDE AREA. IN 1987, EPA IDENTIFIED VOC-CONTAMINATED GROUND WATER IN THE 881 HILLSIDE AREA LOCATED IN THE SOUTHEAST CORNER OF THE SITE NEAR A SURFACE STREAM. POSSIBLE SOURCES FOR THIS CONTAMINATION INCLUDED CHEMICAL AND OIL WASTE PITS, FUEL OIL TANKS, AND AN ASSOCIATED DRUM STORAGE AREA, ONSITE SOLVENT/OIL SPILLS AND LEAKS, AND SANITARY

SEWER OVERFLOW DISCHARGE. THIS RECORD OF DECISION (ROD) ADDRESSES MANAGEMENT OF MIGRATION AND CLEANUP OF GROUND WATER IN THE 881 HILLSIDE AREA, AND IS AN INTERIM REMEDY. FINAL REMEDIATION OF THIS SITE WILL BE ADDRESSED IN A SUBSEQUENT ROD. THE PRIMARY CONTAMINANTS OF CONCERN AFFECTING THE GROUND WATER ARE VOCS INCLUDING PCE AND TCE; METALS INCLUDING CHROMIUM; AND RADIOACTIVE MATERIALS.

Remedy: THE SELECTED REMEDIAL ACTION FOR THIS SITE INCLUDES INTERCEPTING CONTAMINATED GROUND WATER IN THE ALLUVIAL/COLLUVIAL AQUIFER USING A FRENCH DRAIN SYSTEM; TREATING THE CONTAMINATED WATER IN AN ONSITE TREATMENT PLANT USING FILTRATION FOLLOWED BY UV PEROXIDE TO REMOVE ORGANICS, AND ION EXCHANGE TO REMOVE INORGANICS; STORING THE TREATED WATER TEMPORARILY ONSITE DURING EFFLUENT QUALITY TESTING PRIOR TO DISCHARGING THE TREATED WATER TO AN ONSITE INTERCEPTOR DITCH; AND GROUND WATER MONITORING. THE ESTIMATED PRESENT WORTH COST FOR THIS REMEDIAL ACTION IS $4,588,200, WHICH INCLUDES AN ANNUAL O&M COST OF $258,100 FOR 30 YEARS.

PERFORMANCE STANDARDS OR GOALS; GROUND WATER CLEANUP STANDARDS WILL BE THE MORE STRINGENT OF FEDERAL MCLS OR MCLGS, OR STATE WATER QUALITY STANDARDS. CHEMICAL-SPECIFIC GOALS INCLUDE PCE 5 UG/L (STATE), TCE 5 UG/L (STATE), TRIVALENT CHROMIUM 0.05 MG/L (STATE), AND CHROMIUM 0.05 MG/L (STATE).

Text: Full-text ROD document follows on next page.

EPA ROD/R08-90/043
1990

EPA Superfund
Record of Decision:

Rocky Flats Plant (USDOE)
Operable Unit 1
Golden, Co
1/5/1990

INTERIM MEASURES/INTERIM REMEDIAL ACTION PLAN AND DECISION DOCUMENT

881 HILLSIDE AREA OPERABLE UNIT NO. 1

U.S. DEPARTMENT OF ENERGY
Rocky Flats Plant
Golden, Colorado

JANUARY, 1990

Volume I - Text

FINAL

TABLE OF CONTENTS
VOLUME I

SECTION	TITLE	PAGE
1.0	INTRODUCTION	1-1
1.1	Background	1-1
1.2	IM/IRA Plan Organization	1-2
2.0	SITE CHARACTERIZATION	2-1
2.1	Site Description and Background	2-1
2.1.1	Location and Facility Type	2-1
2.1.2	881 Hillside Area Description	2-3
2.1.3	Surrounding Land Use and Population Density	2-5
2.1.4	Site Topography and Geology	2-6
2.1.4.1	Topography	2-6
2.1.4.2	881 Hillside Area Geology	2-7
2.1.5	Sensitive Environments, Surface Water and Ground Water	2-9
2.1.5.1	Sensitive Environments	2-9
2.1.5.2	Surface Water	2-9
2.1.5.3	Ground Water	2-11
2.1.6	Contaminants - Description and Sources	2-13
2.1.6.1	Ground Water Contamination	2-13
2.1.6.2	Soil Contamination	2-29
2.1.6.3	Surface Water Contamination	2-29
2.1.6.4	Sediment Contamination	2-30
2.2	Analytical Data	2-30
2.3	Site Conditions that Justify an IM/IRA	2-30
3.0	IDENTIFICATION OF INTERIM MEASURE/INTERIM REMEDIAL ACTION OBJECTIVES	3-1
3.1	Determination of Remedial Action Scope	3-1
3.2	Interim Remedial Action Schedule	3-1
3.3	Compliance with Applicable or Relevant and Appropriate Requirements	3-2
3.3.1	Ambient or Chemical-Specific Requirements	3-3
3.3.1.1	Safe Drinking Water Act Maximum Contaminant Levels (MCLs) and MCL Goals	3-10
3.3.1.2	Ambient Water Quality Criteria	3-18
3.3.1.3	Colorado Surface Water Quality Standards	3-18
3.3.1.4	RCRA Maximum Concentration Limits	3-19
3.3.2	Locational Requirements	3-20
3.3.3	Performance, Design, or Other Specific Requirements	3-20

TABLE OF CONTENTS
(Continued)

SECTION NO.	TITLE	PAGE
4.0	IDENTIFICATION AND SCREENING OF POTENTIAL IM/IRA OPTIONS	4-1
4.1	Summary of the FS Technology and Remedial Alternative Screening Process	4-1
4.2	IM/IRA Plan Screening Process	4-4
4.2.1	Effectiveness	4-4
4.2.2	Implementability	4-4
4.2.3	Cost	4-5
4.3	Ground Water Treatment Technologies Evaluation	4-5
4.3.1	Activated Carbon Adsorption	4-8
4.3.1.1	Description	4-8
4.3.1.2	Effectiveness	4-8
4.3.1.3	Implementability	4-11
4.3.1.4	Costs	4-11
4.3.2	Ultraviolet (UV) Peroxide Oxidation	4-13
4.3.2.1	Description	4-13
4.3.2.2	Effectiveness	4-13
4.3.2.3	Implementability	4-16
4.3.2.4	Costs	4-17
4.3.3	Air Stripping with Off-Gas Treatment	4-17
4.3.3.1	Description	4-17
4.3.3.2	Effectiveness	4-20
4.3.3.3	Implementability	4-21
4.3.3.4	Costs	4-22
4.3.4	Ion Exchange Treatment	4-24
4.3.4.1	Description	4-24
4.3.4.2	Effectiveness	4-24
4.3.4.3	Implementability	4-27
4.3.4.4	Costs	4-28
4.3.5	Electrodialysis	4-30
4.3.5.1	Description	4-30
4.3.5.2	Effectiveness	4-32
4.3.5.3	Implementability	4-32
4.3.5.4	Costs	4-33
4.3.6	Reverse Osmosis	4-35
4.3.6.1	Description	4-35
4.3.6.2	Effectiveness	4-37
4.3.6.3	Implementability	4-38
4.3.6.4	Costs	4-39
4.4	Comparative Analysis of the Ground Water Treatment Technologies	4-39
4.4.1	Organic Contaminant Treatment Technologies	4-39
4.4.2	Inorganic contaminant Treatment Alternatives	4-41
4.4.3	Preferred Ground Water Treatment System	4-42
4.5	Detailed Evaluation of Remedial Action Alternatives	4-44
4.5.1	Alternative 1: Collect Ground Water From Footing Drain Source Well, and French Drain, and Discharge to the South Interceptor Trench Downgradient of the 881 Hillside Area	4-44
4.5.1.1	Description	4-44
4.5.1.2	Effectiveness	4-46
4.5.1.3	Implementability	4-49

TABLE OF CONTENTS
(Continued

SECTION NO.	TITLE	PAGE
4.5.2	Alternative 2: Total Encapsulation	4-52
4.5.2.1	Description	4-52
4.5.2.2	Effectiveness	4-55
4.5.2.3	Implementability	4.56
4.5.3	Alternative 3: Collect Ground Water From Source Well and Footing Drain, and Discharge to the South Interceptor Trench Downgradient of the 81 Hillside Area	4-58
4.5.3.1	Description	4-58
4.5.3.2	Effectiveness	4-60
4.5.3.3	Implementability	4-60
4.6	Estimated Costs for Alternatives	4-61
5.0	COMPARATIVE ANALYSIS	5-1
5.1	Introduction	5-1
5.2	Comparison of Alternatives	5-1
6.0	PROPOSED IM/IRA	6-1
6.1	Summary	6-1
6.2	Additional Documents	6-7
7.0	REFERENCES	7-1

TABLE OF CONTENTS
(Continued

LIST OF FIGURES

FIGURE NO.	TITLE	PAGE
2-1	Location of Rocky Flats Plant	2-2
2-2	881 Hillside Area Site Map	2-4
2-3	Surface Water Drainage Patterns at Rocky Flats Plant	2-10
2-4	Well Locations at 881 Hillside Area	2-27
4-1	Carbon Adsorption Treatment Unit	4-9
4-2	UV/Peroxide System	4-14
4-3	Air Stripping	4-19
4-4	Ion Exchange	4-25
4-5	Eletrodialysis	4-31
4-6	Reverse Osmosis	4-36
4-7	Treatment System Process Flow Program	4-43
4-8	Alternative 1: French Drain Collection with Treatment	4-45
4-9	French Drain Section	4-47
4-10	Alternative 2: Total Encapsulation	4-53
4-11	Total Encapsulation Section	4-54
4-12	Alternative 3: Foundation Drain & Well 9-74 Collection with Treatment	4-59
6-1	Treatment System Process Flow Diagram	6-5

TABLE OF CONTENTS
(Continued

LIST OF TABLES

TABLE NO.	TITLE	PAGE
2-1	Volatile Organic Compound, Dissolved Metal Constituent, Inorganic Constituent and Radionuclide Constituent Concentrations Above Estimated Background for Building 881 Footing Drain Discharge	2-15
2-2	Volatile Organic Compound, Dissolved Metal Constituent, Inorganic Constituent and Radionuclide Constituent Concentrations Above Estimated Background for Alluvial Wells at the 881 Hillside	2-19
2-3	Volatile Organic Compound, Dissolved Metal Constituent, Inorganic Constituent and Radionuclide Constituent Concentrations Above Estimated Background for Alluvial Wells Downgradient of the 881 Hillside	2-23
3-1	Chemical Specific ARARs for Compounds and Elements Detected at the 881 Hillside Area	3-4
3-2	Screening of Chemical-Specific ARARs Pertinent to 881 Hillside Area IM/IRA Options	3-11
3-3	Screening of Probable Action-Specific ARARs for Remedial Actions at the 881 Hillside Area	3-21
4-1	Basis of Design	4-6
4-2	Estimated Costs for Carbon Adsorption System	4-12
4-3	Overall Costs for the UV / Peroxide Ground Water Treatment Unit	4-18
4-4	Overall Costs for the Air Stripper Ground Water Treatment Unit	4-23
4-5	Overall Costs for the Ion Exchange Treatment System	4-29
4-6	Overall Costs for the Electrodialysis Treatment System	4-34
4-7	Overall Costs for the Reverse Osmosis Treatment System	4-40
4-8	Capital Costs Component Work Sheet	4-63
4-9	Cyclic Costs Component Work Sheet (Dollars per Year)	4-64
4-10	Summary of Alternative Costs	4-65
5-1	Summary of Alternatives	5-2

TABLE OF CONTENTS
(Continued

VOLUME II

APPENDIX

SECTION 1 Volatile Organic Compound, Dissolved Metals, Inorganic Compound, and Radiochemistry Analytical Results for Alluvial Wells at the 881 Hillside

Wells/Stations in this group: 09-74, 10-74, 01-87, 04-87, 06-87, 43-87, 44-87, 49-87, 50-87, 51-87, 52-87, 53-87, 54-87.

SECTION 2 Volatile Organic Compound, Dissolved Metals, Inorganic Compound, and Radiochemistry Analytical Results for the Building 881 Footing Drain Discharge

Wells/Stations in this group: SW-45.

SECTION 3 Volatile Organic Compound Dissolved Metals, Inorganic Compound, and Radiochemistry Analytical Results for Alluvial Wells Downgradient of the 881 Hillside

Wells/Stations in this group: 64-86, 65-86, 66-86, 69-86, 02-87, 47-87, 48-87, 55-87.

GLOSSARY OF ACRONYMS

ACRONYM	MEANING
ARAR	Applicable or Relevant and Appropriate Requirements
BAT	Best Available Technology
BDAT	Best Demonstrated Available Technology
BDL	Below Detection Limits
CAA	Clean Air Act
CCl_4	carbon tetrachloride
CCR	Colorado Code of Regulations
CDH	Colorado Department of Health
CEARP	Comprehensive Environmental Assessment and Response Program
CEDE	Committed Effective Dose Equivalent
CERCLA	Comprehensive Environmental Response, Compensation, and Liability Act of 1980
CFR	Code of Federal Regulations
$CHCl_3$	chloroform
CMS/FS	Corrective Measures Study/Feasibility Study
CWA	Clean Water Act
1,1 DCA	1,1 dichloroethane
1,2 DCA	1,2 dichloroethane
1,1 DCE	1,1 dichloroethene
1,2 DCE	1,2 dichloroethene
DEHP	bis (2-ethylhexyl) phthalate
DOE	Department of Energy
DOT	Department of Transportation
EE/CA	Engineering Evaluation/Cost Analysis
EPA	Environmental Protection Agency
ER	Environmental Restoration Program
FEMA	Federal Emergency Management Agency
FIFRA	Federal Insecticide, Fungicide, and Rodenticide Act
FR	Federal Register
FWPCA	Federal Water Pollutant Control Act
GAC	Granular Activated Carbon
GOCO	Government Owned, Contractor Operated
GPM	Gallons Per Minute
GWPS	Ground Water Protection Standards
HDPE	High Density Polyethylene
HEC	Health Effects Criterion
HS&E	Health, Safety and Environment

ACRONYM	MEANING
HSWA	Hazardous and Solid Waste Amendments of 1984
IM/IRA	Interim Measures/Interim Remedial Action
JSA	Job Safety Analysis
KW-HR	Kilowatt-Hour
LDR	Land Disposal Restrictions
MCL	Maximum Contaminant Level
MDA	Minimum Detectable Activity
MCLG	Maximum Contaminant Level Goal
NCP	National Contingency Plan
NEPA	National Environmental Policy Act of 1969
NPDES	National Pollutant Discharge Elimination System
OSA	Operational Safety Analysis
OSHA	Occupational Safety and Health Administration
PCE	tetrachloroethene
PEL	Permissible Exposure Limits
POTW	Publicly Owned Treatment Works
PPM	Parts Per Million
PVC	polyvinyl chloride
PWF	Present Worth Factor
RAAMP	Radioactive Ambient Air Monitoring Program
RCRA	Resource Conservation and Recovery Act of 1976
RfD	Reference Dose
RFI/RI	RCRA Facility Investigation/Remedial Investigation
RFP	Rocky Flats Plant
RI/FS	Remedial Investigation/Feasibility Study
SARA	Superfund Amendments and Reauthorization Act of 1986
SDWA	Safe Drinking Water Act
SWMU	Solid Waste Management Unit
TBC	To Be Considered
1,1,1 TCA	1,1,1 trichloroethane
TCL	Target Compound List
TCE	trichloroethene
TDS	Total Dissolved Solids
TSCA	Toxic Substances Control Act
USC	United States Code
USFWS	United States Fish and Wildlife Service
UV/peroxide	Ultraviolet/peroxide
VOCS	Volatile Organic Compounds

SECTION 1.0

INTRODUCTION

1.1 BACKGROUND

The Department of Energy (DOE) wishes to pursue an Interim Measures/Interim Remedial Action (IM/IRA) at the High Priority Sites (881 Hillside Area) at the Rocky Flats Plant (RFP). Pursuant to the Resource Conservation and Recovery Act of 1976 (RCRA) as amended by the Hazardous and Solid Waste Amendments of 1984 (HSWA), and the Comprehensive Environmental Response, Compensation, and Liability Act of 1980 (CERCLA) as amended by the Superfund Amendments and Reauthorization Act of' 1986 (SARA) this interim action is to be conducted to minimize the release of hazardous substances from this Area that pose a potential long-term threat to the public health and environment. Due to the presence of contaminated ground water and it's proximity to Woman Creek, DOE would like to implement this IM/IRA Plan because of the length of time it typically takes to finalize a RCRA Facility Investigation/Remedial Investigation (RFI/RI), and Corrective Measures Study/Feasibility Study (CMS/FS).

This IM/IRA Plan has been prepared to identify, screen, and evaluate appropriate interim remedial action alternatives, and select the preferred interim remedial action for the Area. This IM/IRA Plan has been prepared to conform with the requirements for an Engineering Evaluation/Cost Analysis (EE/CA) as defined in the proposed National Contingency Plan [40 CFR 300.415(b)(4)].

In March 1987, a remedial investigation under the Environmental Restoration (ER) Program [formerly known as the Comprehensive Environmental Assessment, and Response Program (CEARP)] began at the twelve sites comprising the 881 Hillside Area. The investigation consisted of the preparation of detailed topographic maps, radiometric and organic vapor screening surveys, surface geophysical surveys, a soil gas survey, a boring and

well completion program, soil sampling and ground and surface water sampling. The results of this remedial investigation are presented in the Draft Final Remedial Investigation Report for High Priority Sites (Rockwell International, 1988a). A feasibility study was also conducted for the 881 Hillside Area, the results of which are presented in the Draft Feasibility Study Report for High Priority Sites (Rockwell International, 1988b). Rockwell has also prepared a detailed response to EPA comments on the RI and FS reports (Rockwell International, 1989). The final RFI/RI and CMS/FS reports will address the nature and extent of soils and ground water contamination, and final remediation of 881 Hillside Area. The final RFI/RI and CMS/FS reports will evaluate the effectiveness of the IM/IRA.

1.2 IM/IRA PLAN ORGANIZATION

Volume I or this IM/IRA Plan is divided into six sections addressing the details of the plan. Section 2.0 of this IM/IRA Plan describes the results of previous investigations of the 881 Hillside. Most of the information included in Section 2.0 has been derived from the RI report, although chemical data has been updated to include all data received to date.

Section 3.0 identifies the objectives of the IM/IRA. The objectives will define criteria used to identify and evaluate IM/IRA options.

Section 4.0 identifies technically feasible ground water treatment technologies, screens these technologies based on implementability, effectiveness, and costs, integrates the preferred ground water treatment technology into alternative IM/IRA options that address the objectives, and screens these alternatives based on implementability, effectiveness, and costs. Most of the information included in Section 4.0 has been derived from the FS report, however, this document expands upon the FS report by addressing treatment of inorganic contaminants in the alluvial ground water.

Section 5.0 summarizes the detailed analysis performed in Section 4.0, and Section 6.0 presents the preferred IM/IRA. Volume II of this IM/IRA Plan contains the alluvial ground-water quality data for the 881 Hillside Area.

SECTION 2.0

SITE CHARACTERIZATION

2.1 SITE DESCRIPTION AND BACKGROUND

2.1.1 Location and Facility Type

The Rocky Flats Plant (RFP) is located in northern Jefferson County, Colorado, approximately 16 miles northwest of downtown Denver (Figure 2-1). The Plant site consists of approximately 6,550 acres of federally owned land in Sections 1 through 4, and 9 through 15, of T2S, R70W, 6th principal meridian. Major buildings are located within an area of approximately 400 acres, known as RFP security area. The security area is surrounded by a buffer zone of approximately 6,150 acres.

The RFP is a government-owned, contractor-operated (GOCO) facility. It is part of a nation-wide nuclear weapons research, development, and production complex administered by the Albuquerque Operations Office of the U.S. Department of Energy. The operating contractor for the Rocky Flats Plant is Rockwell International. The facility manufactures components for nuclear weapons and has been in operation since 1951. RFP fabricates components from plutonium, uranium, beryllium, and stainless steel. Production activities include metal fabrication, machining, and assembly. Both radioactive and nonradioactive wastes are generated in the process. Current waste handling practices involve on-site and off-site recycling of hazardous materials and off-site disposal of solid radioactive materials at other DOE facilities.

The RFP is currently an interim status Resource Recovery and Conservation Act (RCRA) hazardous waste treatment/storage facility. In the past, both storage and disposal of hazardous and radioactive wastes occurred at on-site locations.

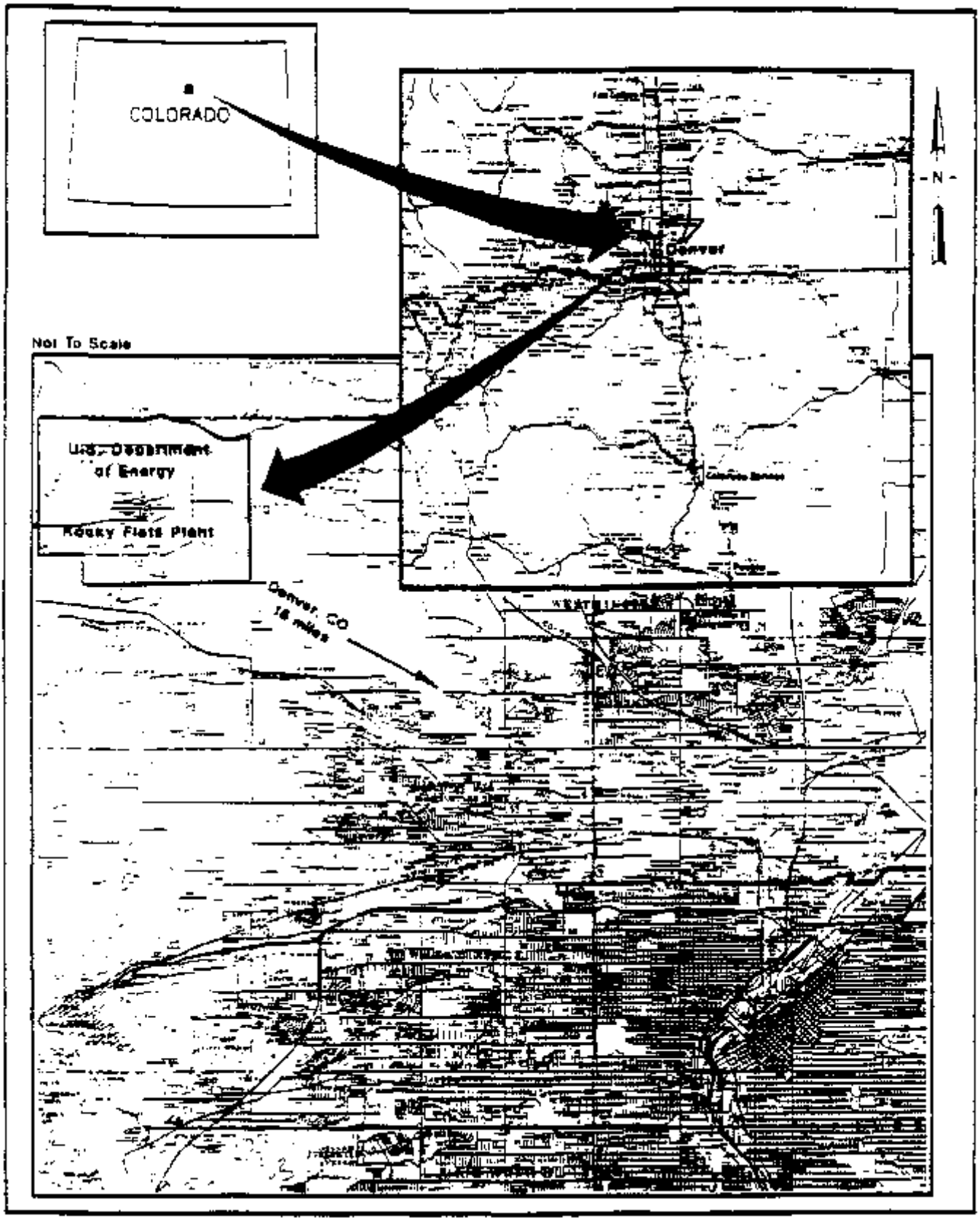

Figure 2-1: LOCATION OF ROCKY FLATS PLANT

Preliminary assessments conducted under Phase 1 of the ER Program identified some of the past on-site storage and disposal locations as potential sources of environmental contamination.

2.1.2 881 Hillside Area Description

There are twelve sites, designated as solid waste management units (SWMUs), which comprise the 881 Hillside Area. These sites were investigated as high priority sites because of elevated concentrations of volatile organic compounds in the ground water and the proximity of the sites to a surface drainage. The 881 Hillside Area is located at the southeast corner of RFP (Figure 2-2). A brief description of each site in the 881 Hillside Area is presented below.

1. **Oil Sludge Pit (SWMU 102)** -- A small pond located south of Building 881 was used for disposal of oil sludges in the late 1950s.

2. **Chemical Burial Site (SWMU 103)** -- A small pit was used for disposal of liquid wastes southeast of Building 881 in the early 1960s.

3. **Liquid Dumping (SWMU 104)** -- An area east of Building 881 was reportedly used for disposal of unknown liquids prior to 1969. This was not substantiated by results of drilling the area in 1987. Therefore, this site may not exist and its location is not shown on the map.

4,5. **No. 6 Fuel Oil Tanks (SWMUs 105.1 & 105.2)** -- Two fuel oil tanks are located south of Building 881; they are out of service and filled with concrete.

6. **Outfall Site (SWMU 106)** -- An overflow line from the sanitary sewer sump south of Building 881 daylights on the slope below the Building.

7. **Hillside Oil Leak (SWMU 107)** -- Oil was discovered flowing from the Building 881 footing drain in early 1973. The source of the oil was never positively identified but the oil was collected in a skimming pond and transported off site. There is an ongoing discharge of water from the footing drain.

8,9. **Multiple Solvent Spills (SWMUs 119.1 & 119.2)** -- Two areas east of Building 881 were used for barrel storage between 1969 and 1972.

10. **Radioactive Site (SWMU 130)** -- Soils contaminated with low levels of radionuclides were placed on the hillside cast of Building 881 and covered with soil between 1969 and 1972.

11. **Sanitary Sewer Line Leak (SWMU 145)** -- The sanitary sewer line leaked on the hillside southwest of Building 881 in early 1981.

12. **Drum Storage Area (SWMU 177)** -- Building 885 is currently used for satellite collection and 90-day accumulation of RCRA-regulated wastes. The building will be closed and soil remediation addressed under RCRA Interim Status (6 CCR 1007-3). Ground-water contamination will be addressed as part of the 881 Hillside Area RI/FS performed under CERCLA.

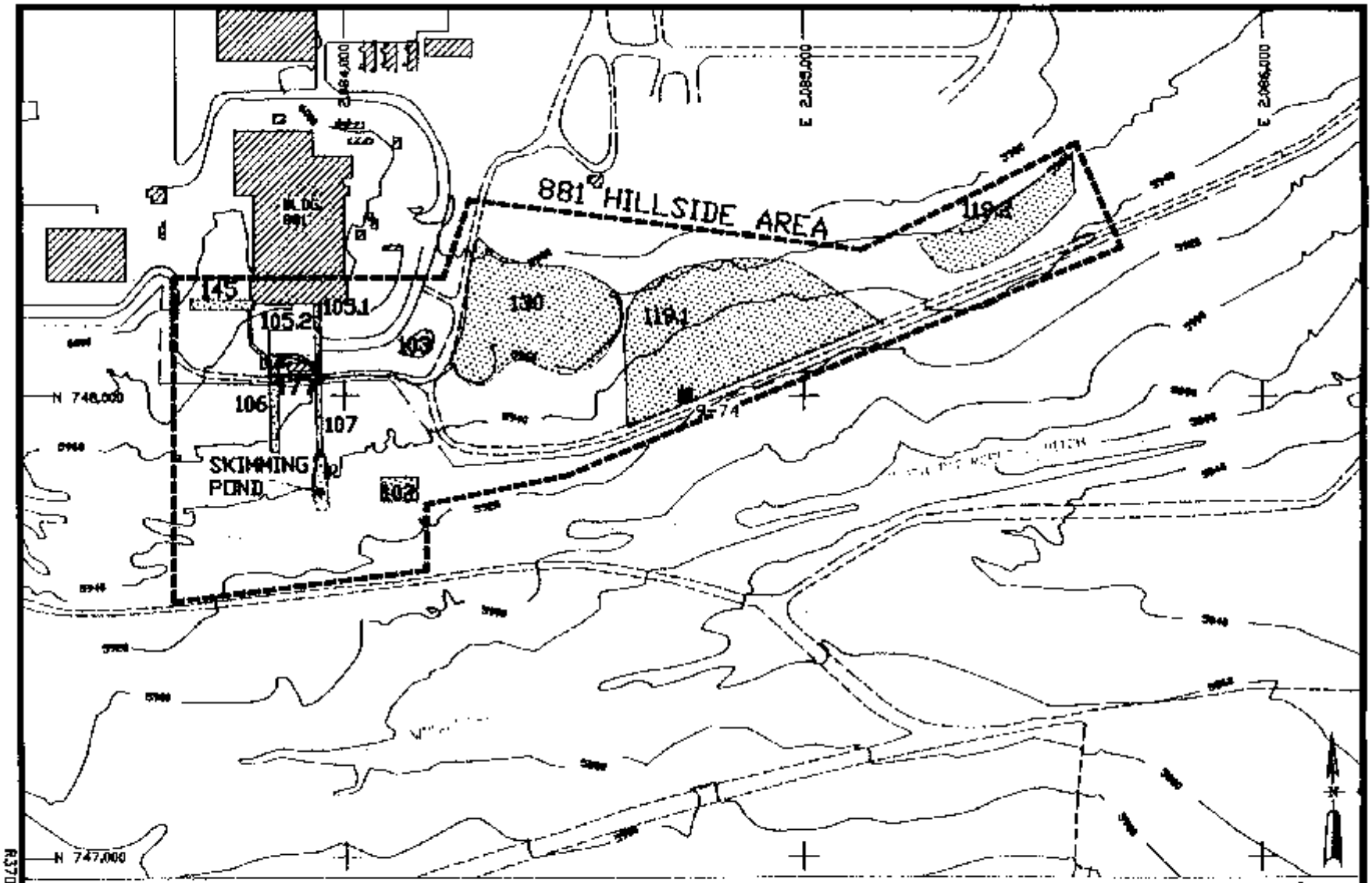

FIGURE 2-2
881 HILLSIDE AREA SITE MAP

R37016.P-0/2599

2.1.3 Surrounding Land Use and Population Density

The Rocky Flats Plant is located in a rural area. There are eight public schools, within six miles of RFP. The nearest educational facility is the Witt Elementary School, which is approximately 2.7 miles east of the RFP buffer zone. The closest hospital to RFP is Centennial Peaks Hospital located approximately seven miles northeast. The closest park and recreational area is the Standley Lake area, which is approximately five miles southeast of the RFP site. Boating, picnicking, and limited overnight camping are permitted. Several other small parks exist in communities within ten miles of RFP. The closest major park, Golden Gate Canyon State Park, located approximately 15 miles to the southwest, provides 8,400 acres of general camping and outdoor recreation. Other national and state parks are located in the mountains west of RFP, but all are more than 15 miles away.

Some of the land adjacent to RFP is zoned for industrial development. Industrial facilities within five miles of RFP include the TOSCO laboratory (40-acre site located two miles south), the Great Western Inorganics Plant (two miles south), the Frontier Forest Products yard (two miles south), the Idealite Lightweight Aggregate Plant (2.4 miles northwest), and the Jefferson County Airport and Industrial Park (990-acre site located 4.8 miles northeast).

Several ranches are located within ten miles of RFP, primarily in Jefferson and Boulder Counties. They are operated to produce crops, raise beef cattle, supply milk, and breed and train horses. According to the 1987 Colorado Agricultural Statistics, 20,758 acres of crops were planted in Jefferson County (total land area of approximately 475,000 acres) and 68,760 acres of crops were planted in Boulder County (total land area of 405,760 acres). Crops consisted of winter wheat, corn, barley, dry beans, sugar beets, hay, and oats. Livestock consisted of 5,314 head of cattle, 113 hogs, and 346 sheep in Jefferson County, and 19,578 head of cattle, 2,216 hogs, and 12,133 sheep in Boulder County (Post, 1989).

Approximately 50 percent of the area within ten miles of RFP is in Jefferson County. The remainder is located in Boulder County (40 percent) and Adams County (10 percent).

According to the 1973 Colorado Land Use Map, 75 percent of this land was unused or was used for agriculture. Since that time, portions of this land have been converted to housing, with several new housing subdivisions being started within a few miles of the buffer zone. One such subdivision is located south of the Jefferson County Airport and several are located, southeast of RFP.

A demographic study using 1980 census data shows that approximately 1.8 million people lived within 50 miles of RFP in 1980 (Rockwell International, 1987b). Approximately 9,500 people lived within five miles of RFP in 1980. The most populous sector was to the southeast, toward the center of Denver. This sector had a 1980 population of about 555,000 people living between 10 and 50 miles from RFP. Recent population estimates registered by the Denver Regional Council of Governments for the eight county Denver Metro region have shown distinct patterns of growth between the first and second halves or the decade. Between 1980 and 1985, the population of the eight county region increased by 197,890, a 2.4 percent annual growth rate. Between 1985 and 1989 a population gain of 71,575 was recorded, representing a 1.0 percent annual increase (the national average). The 1989 population showed an increase of 2,225 (or 0.1 percent) from the same date in 1988 (DRCOG, 1989).

2.1.4 Site Topography and Geology

2.1.4.1 Topography

The Rocky Flats Plant is located at an elevation of approximately 6,000 feet above mean sea level. The site is on the western margin of the Colorado Piedmont section of the Great Plains Physiographic Province. The piedmont represents an old erosional surface along the eastern margin of the Rocky Mountains. It is underlain by gently dipping sedimentary rocks (Paleozoic to Cenozoic in age) which are abruptly upturned at the Front Range (just west of RFP) to form hogback ridges parallel to the mountain front. The piedmont surface is broadly rolling and slopes gently to the east with n topographic relief of only several hundred

feet. This relief is due both to resistant bedrock units that locally rise landscape and to the presence of incised stream valleys.

2.1.4.2 881 Hillside Area Geology

The following geologic information is based on the RI Report (Rockwell International 1988a), and the reader is referred to this report for additional details.

Surficial Materials

Surficial materials at the 881 Hillside Area consist of the Rocky Flats Alluvium, colluvium, valley fill alluvium, and artificial fill overlying bedrock. In addition, there are a few isolated exposures of claystone bedrock. The study area is located on the south-facing hillside which slopes down from the Rocky Flats terrace surface toward Woman Creek on the south side of RFP. Rocky Flats Alluvium caps the top of the slope, and colluvium (slope wash) covers the hillside. Artificial fill and disturbed surficial materials are present around Building 881 and south of the building to the South Interceptor Ditch. Artificial fill overlies colluvium at SWMU 130, and surficial materials arc disturbed in the vicinity of SWMUs 119.1 and 119.2. Valley fill alluvium is present along the drainage of Woman Creek south of the 881 Hillside Area, and terrace alluvium occurs on the north side of the Woman Creek valley fill alluvium.

Of particular significance with respect to contaminant transport in alluvial ground water are the presence of gravel layers in colluvial materials overlying bedrock and near surface. These gravels were likely deposited in a south (downslope) direction by creep and slope wash erosion of the Rocky Flats Alluvium and can be expected to be elongated in the north-south direction with rather limited extent in the east-west. The gravel layers range between 1.3 feet to 5.5 feet in thickness.

Bedrock Material

The Cretaceous Arapahoe Formation underlies surficial materials at the 881 Hillside Area. Six wells were completed in various zones of the bedrock in the 1986 and 1987 drilling programs. The Arapahoe Formation beneath the 881 Hillside Area consists of claystones with interbedded lenticular sandstones, siltstones, and occasional lignite deposits. The Arapahoe Formation was deposited by meandering streams flowing generally from west to cast off the Front Range. Sandstones were deposited in stream channels and as overbank splays, and claystones were deposited in back swamp and floodplain areas. Leaf fossils, organic matter, and lignite beds were encountered within the claystones during drilling at the 881 Hillside. Contacts between various lithologies are both gradational and sharp. Bedrock is estimated to dip approximately 7 degrees to the east.

Claystone bedrock was the most frequently encountered lithology or tile Arapahoe Formation immediately below the bedrock contact. Weathered bedrock was encountered directly beneath surficial materials in all of the boreholes and wells, and weathering appears to penetrate as much as 60 feet below ground surface. The weathered claystone is also characterized by moderate fracturing and thus exhibits higher hydraulic conductivities than unweathered claystone.

Arapahoe sandstones were encountered beneath the 881 Hillside Area. These sandstones range from poorly-sorted to well-sorted, subrounded to rounded, very fine- to medium-grained, poorly- to moderately-well-cemented quartz sand with up to 10% lithic fragments. The thickness of individual sandstone beds ranged between 5 to 12 feet.

2.1.5 Sensitive Environments, Surface Water, and Ground Water

2.1.5.1 Sensitive Environments

The Endangered Species Act of 1973 (Public Law 93-0205), as amended, provides that all federal agencies shall carry out programs for the conservation of listed endangered and threatened species. Federal agencies must ensure that actions authorized, funded, or carried out by them will not jeopardize the continued existence of any endangered or threatened species or result in the destruction or adverse modification of critical habitats as determined by the Secretary of the Interior.

The 881 Hillside Area is not used, nor intended for use, as a public or recreational area, nor for the development of any unique natural resource. No unique ecosystems were found at RFP during extensive biological studies. Communication with the U.S. Fish and Wildlife Service resulted in a finding of no affect on endangered species due to activities at the 881 Hillside Area.

There are no flood plains, natural wetlands, or historical /archaeological features at the 881 Hillside Area. A small wetland area has been created in the South Interceptor Ditch as a result of the discharge from the Building 881 footing drain (SWMU 107).

2.1.5.2 Surface Water

Woman Creek is an eastward-flowing, ephemeral stream located to the south of the 881 Hillside. The stream drains the southern portion of the Rocky Flats Plant site, and delivers water to Mower Reservoir and Standley Lake which are respectively used for agricultural and domestic water supply (see Figure 2-3). The South Interceptor Ditch, located between the 881 Hillside and Woman Creek, extends from south of the inner west gate entrance to Pond C-2 in the Woman Creek drainage. The ditch isolates runoff from the south side of RFP (including

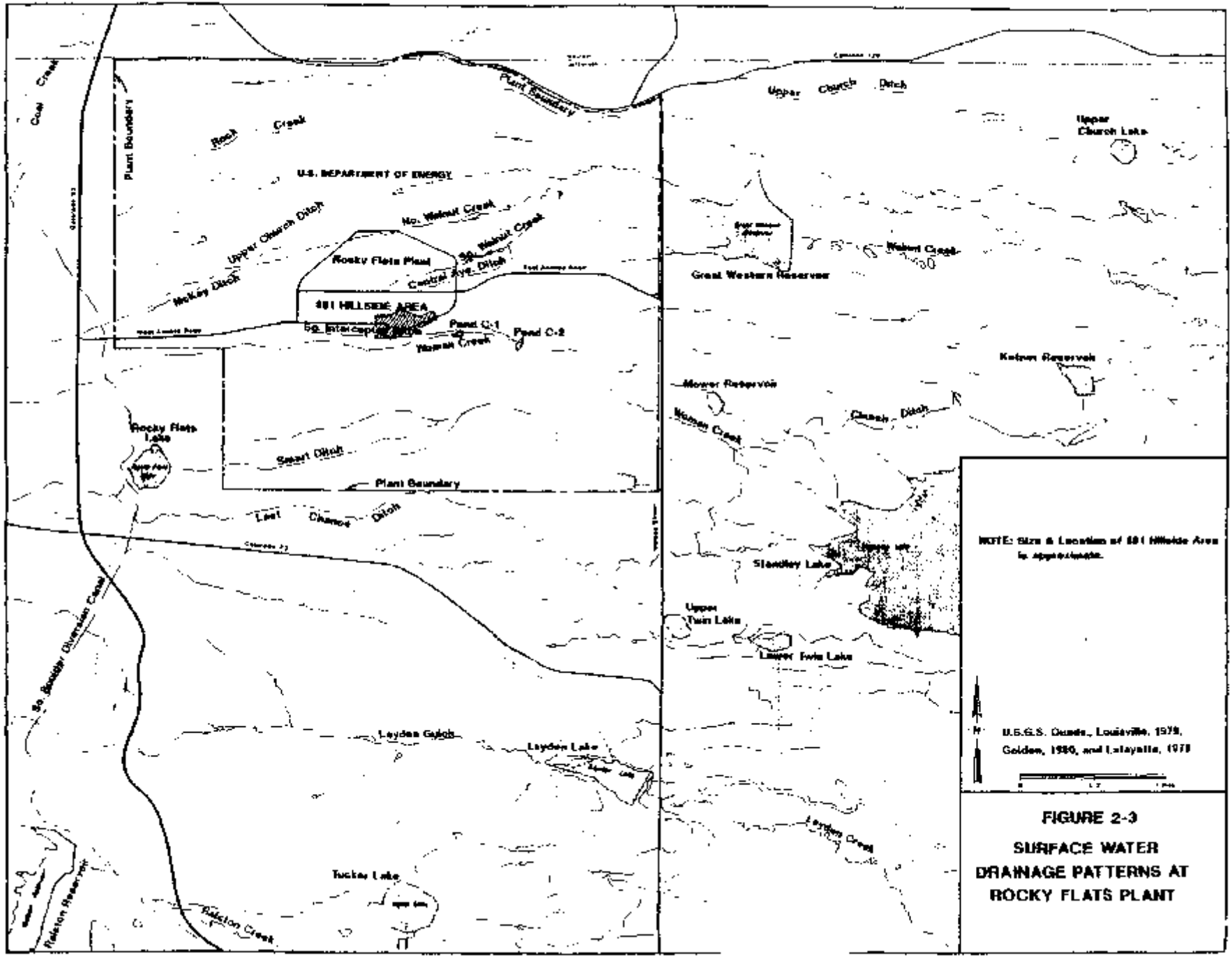

FIGURE 2-3

SURFACE WATER DRAINAGE PATTERNS AT ROCKY FLATS PLANT

the 881 Hillside) from Woman Creek. Surface water flowing in an easterly direction along the South Interceptor Ditch is collected in Pond C-2, from which it is discharged to Woman Creek in accordance with the RFP National Pollutant Discharge Elimination System (NPDES) permit. The permitted discharge point is designated as 007. Pond C-1 receives flow from Woman Creek. A diversion structure located upstream of Pond C-2 diverts flow in Woman Creek around Pond C-2 and into the Woman Creek channel downstream. Along Woman Creek and the South Interceptor Ditch, retention ponds C-1 and C-2, and the associated diversion structures, control surface water discharge from the RFP site.

2.1.5.3 Ground Water

Ground water occurs in surficial materials (Rocky Flats Alluvium, colluvium, terrace alluvium, valley fill alluvium, and artificial fill) and in Arapahoe sandstones and claystones at the 881 Hillside Area. These two hydraulically connected flow systems are discussed separately below.

<u>Ground Water in Surficial Materials</u>

Ground water is present in surficial materials at the 881 Hillside under unconfined conditions. Recharge to the water table occurs as infiltration of incident precipitation and as seepage from ditches and creeks. The shallow ground-water flow system is quite dynamic, with large water level changes occurring in response to precipitation events and to stream and ditch flow.

Ground water flows from the Rocky Flats Alluvium at the top of the 881 Hillside south through colluvial materials toward Woman Creek. Ground water in Rocky Flat Alluvium or colluvium is hereinafter referred to as alluvial ground-water. Flow through colluvial materials primarily occurs in the gravel within the colluvium. At the Rocky Flats terrace edges, ground water emerges as seeps and springs at the contact between the alluvium and claystone bedrock (contact seeps), is consumed by evapotranspiration, or flows through colluvial materials

following topography toward the valley fill and terrace alluviums. The maximum and mean ground-water velocities through colluvial materials are estimated at 780 ft/yr and 150 ft/yr, respectively. Once ground water reaches the valley, it either flows down-valley in the alluvium, is consumed by evapotranspiration, or discharges to Woman Creek. The maximum and mean ground-water velocities in Woman Creek valley fill have been estimated at 650 ft/yr and 145 ft/yr, respectively.

Bedrock Ground-Water Flow System

Ground-water flow in the Arapahoe Formation occurs primarily in the sandstones contained within the claystones. Ground-water recharge to sandstones occurs as infiltration from an alluvial ground water where sandstones subcrop beneath the alluvium and by leakage through the claystones overlying the sandstones.

There is a strong downward gradient between ground water in surficial materials and bedrock. Vertical gradient data are provided in the RI report (Rockwell International, 1988a). Calculated vertical gradients ranging from about 2 to 0.3 ft/ft indicate a hydraulic potential for downward flow. The presence of unsaturated conditions in some locations and high vertical gradients where subsurface materials arc continuously saturated indicates that the intervening material (claystone) has a very low hydraulic conductivity. Ground-water flow within individual sandstones is from west to east. The maximum horizontal ground-water velocity in sandstone is estimated at about 36 ft/yr while the mean velocity is estimated to be 12 ft/yr. Ground water moves at these rates only if the sandstone unit is continuous or has good interconnection with an adjacent unit. To date, lateral continuity of sandstone units along strike has been demonstrated to be small and only a few correlations have been made along dip.

Usable ground water occurs in the Arapahoe Aquifer. Water from the sandstones of the Arapahoe Aquifer is used for irrigation, livestock watering, and domestic purposes east of RFP.

2.1.6 Contaminants -- Description and Sources

2.1.6.1 Ground-Water Contamination

Organic contamination of alluvial ground-water at the 881 Hillside Area is evident. However, the existence of inorganic contamination in alluvial ground-water is uncertain at this time. This uncertainty is due to the limited data on background chemical conditions for alluvial ground-water. Water-quality data from well 55-86, located southwest of the plant and upgradient of all known SWMUs, is the only current data available for characterizing background ground-water chemistry. Over two years of quarterly data exist for this well.

This data has been used to preliminarily determine which constituents in ground water at the 881 Hillside Area are contaminants. Constituent concentrations in ground water at the 881 Hillside Area that exceed the upper limit of the range of concentrations in well 55-86 are presumed to represent contaminants.

A background characterization study is currently underway to provide more definitive information of the spatial and temporal variability of alluvial, colluvial, valley fill, and bedrock ground-water quality. These data will be used to better evaluate the nature and extent of inorganic contamination at the 881 Hillside and remedial action alternatives that address this contamination for the final RFI/RI and CMS/FS reports. For this interim remedial action, clean-up criteria are defined by applicable or relevant and appropriate requirements (ARARs) or proposed requirements to be considered (TBC) as discussed in Section 3. Variances from ARARs may be appropriate in the future when background chemical conditions arc adequately characterized.

Alluvial ground water is contaminated with various volatile organic compounds (VOCs) and possibly various metals, major ions, and uranium. Alluvial ground water at the 881 Hillside Area has been divided into three groups on the basis of contaminant migration pathway or nature of the contamination as follows:

1) The Building 881 footing drain discharge (SWMU 107), i.e., alluvial groundwater discharging to a surface water pathway.

2) Alluvial ground water beneath or in the immediate vicinity of the 881 Hillside Area characterized by the presence of VOCs in many of the wells.

3) Alluvial ground water downgradient of the 881 Hillside Area beyond the limits of VOC contamination.

For each of these groups, the nature of contamination is summarized in Tables 2-1, 2-2, and 2-3. Well locations are identified on Figure 2-4. Each table identifies the maximum, minimum, and average concentrations of VOCs, metals, major ions and radionuclides that were detected above estimated background concentrations. The chemical-specific ARARs are also identified in the tables.

The VOC maximum, minimum, and average concentrations reported in Tables 2-1, 2-2, and 2-3 are based on data from the first and second quarter 1989 groundwater sampling as this is the only validated VOC data available to date that was categorized acceptable. All other analytes reported in Tables 2-1, 2-2 and 2-3 use 1987 and 1988 quarterly data. The grouping of alluvial ground water wells, averaging of data, and comparison to ARAR's is only intended to provide the reader with an overview of the magnitude of ground-water contamination at and in the vicinity of the 881 Hillside Area. Clean-up of the ground water to achieve chemical-specific ARARs will be determined on a SWMU-specific basis.

The footing drain discharge is characterized by low concentrations of VOCs, and above estimated background concentrations of a few metals, major ions, and uranium. Of the VOCs, only tetrachloroethene (TCE) exceeded ARAR in 1989. Average values for total dissolved solids and mercury exceeded ARAR for the inorganic constituents; however, the high average mercury concentration is considered an artifact of including an apparent erroneous data point (0.9 ug/l). Subsequent analyses show mercury concentrations to be below ARAR. The dissolved plutonium concentration is also considered an erroneous data point because the total plutonium concentration for that sample was less than the Minimum Detectable Activity (MDA).

TABLE 2-1
VOLATILE ORGANIC COMPOUND CONCENTRATIONS
ABOVE ESTIMATED BACKGROUND FOR BUILDING 881 FOOTING DRAIN DISCHARGE
ALL CONCENTRATIONS IN ug/1

Analyte	Background Value		ARAR Value		Reported when the maximum value exceeds Background: Maximum Value	Minimum Value		Average of All Values [ii]	Wells/Stations in which Background Value was exceeded
Chloromethane	10	U							
Bromomethane	10	U							
Vinyl Chloride	10	U							
Chloroethane	10	U							
Methylene Chloride	5	U	5	U					
Acetone	10	U	50						
Carbon Disulfide	5	U	5	U					
1,1-Dichloroethene	5	U	7						
1,1-Dichloroethane	5	U	5	U [i]					
1,2-Dichloroethene (total)	5	U							
Chloroform	5	U							
1,2-Dichloroethane	5	U	5						
2-Butanone	10	U							
1,1,1-Trichloroethane	5	U	200						
Carbon Tetrachloride	5	U	5						
Vinyl Acetate	10	U							
Bromodichloromethane	5	U							
1,2-Dichloropropane	5	U							
cis-1,3-Dichloropropene	5	U							
Trichloroethene	5	U	5						
Dibromochloromethane	5	U							
1,1,2-Trichloroethane	5	U	5	U					
Benzene	5	U							
Trans-1,3-Dichloropropene	5	U							
2-Chloroethylvinylether	10	U							
Bromoform	5	U							
4-Methyl-2-pentanone	10	U							
2-Hexanone	10	U							
Tetrachloroethene	5	U	5	U	8 +	2	J	5	SW45
1,1,2,2-Tetrachloroethane	5	U							
Toluene	5	U	2000						
Chlorobenzene	5	U							
Ethylbenzene	5	U							
Styrene	5	U							
Total Xylenes	5	U							

[i] No standard, RCRA Appendix IX constituent, therefore background value is TBC. + - Value exceeds ARAR.

[ii] The average is computed by first determining the arithmetic mean concentration at individual wells/stations and then using this data to compute the arithmetic mean for the wells/stations in this group. If a datum indicates non-detected, the value used in the computation is one-half the detection limit.

NS-No Standard. U-Detection Limit. J-Present below Detection Limit. B-Present in Blank. - Average exceeds background.

Notes: Minimum, Maximum, and Average based on 1989 first and second quarter data.
Background values based on upper limit of values found in well 55-86.
Wells/Stations in this group: SW45

TABLE 2-1 (Continued)
INORGANIC CONSITUENT CONCENTRATIONS
ABOVE ESTIMATED BACKGROUND FOR BUILDING 881 FOOTING DRAIN DISCHARGE
ALL CONCENTRATIONS IN MG/L

Analyte	Background Value	ARAR Value	Reported when the maximum value exceeds Background: Maximum Value	Minimum Value	Average of All Values ii	Wells/Stations in which Background Value was exceeded
Total Dissolved Solids	167	400	464 +	456 +	460 *	SW45
Chloride	19	250	77	74.1	76	SW45
Nitrate+Nitrite as N	1.5	10	8.50	8	8.250	SW45
Sulfate	27	250	56	44.0	50	SW45
HCO3- as CaCO3	79	NS	232 +	216 +	224	SW45

+ - Value exceeds ARAR; _____ - Average exceeds background.

ii The average is computed by first determining the arithmetic mean concentration at individual wells/stations and then using this data to compute the arithmetic mean for the wells/stations in this group. If a datum indicates non-detected, the value used in the computation is one-half the detection limit.

NS - No Standard. U - Detection Limit. J - Present below Detection Limit. B - Present in Blank

Notes: Minimum, Maximum, and Average based on 1987/1988 Quarterly Data.
Background values, based on upper limit of values found in well 55-86.
Wells/Stations in this group: SW45

TABLE 2-1 (Continued)
DISSOLVED METAL CONSTITUENT CONCENTRATIONS
ABOVE ESTIMATED BACKGROUND FOR BUILDING 881 FOOTING DRAIN DISCHARGE
ALL CONCENTRATIONS IN mg/1

Analyte		Detec. Limit	Background Value	ARAR Value	Reported when the maximum value exceeds Background: Maximum Value	Minimum Value	Average of All Values [ii]	Wells/Stations in which Background Value was exceeded
Aluminum	(Al)	0.0290	0.223	5.0				
Antimony	(Sb)	0.0600	0.06 U	0.06 U				
Arsenic	(As)	0.0100	0.01 U	0.05				
Barium	(Ba)	0.0100	0.071	1.0	0.1547	0.1547	0.0799	SW45
Beryllium	(Be)	0.0050	0.005 U	0.1				
Cadmium	(Cd)	0.0050	0.005 U	0.01				
Calcium	(Ca)	0.7500	33.8	NS	85.342	78.0	82	SW45
Cesium	(Cs)	0.0200	0.02 U	NS				
Chromium	(Cr)	0.0100	0.026	0.05				
Copper	(Cu)	0.0063	0.046	0.2				
Iron	(Fe)	0.0069	0.162	0.3				
Lead	(Pb)	0.0050	0.016	0.05				
Lithium	(Li)	0.1000	0.1 U	2.5				
Magnesium	(Mg)	0.0500	5.9	NS	21.0	19.021	20	SW45
Manganese	(Mn)	0.0051	0.066	0.05				
Mercury	(Hg)	0.0002	0.0002 U	0.002	0.90 +	0.0002 U	0.3001 +	SW45
Molybdenum	(Mo)	0.0220	0.022 U	0.1				
Nickel	(Ni)	0.0370	0.037 U	0.20				
Potassium	(K)	0.5000	0.8	NS	3.8	3.8	1.4333	SW45
Selenium	(Se)	0.0050	0.005 U	0.01	0.018 +	0.005 U	0.0077	SW45
Silver	(Ag)	0.0076	0.083	0.05				
Sodium	(Na)	2.1000	13.1	NS	46	41.461	44	SW45
Strontium	(Sr)	0.0200	0.15	NS	0.7	0.6411	0.6705	SW45
Thallium	(Tl)	0.0100	0.01 U	0.01 U				
Vanadium	(V)	0.0240	0.024	0.1				
Zinc	(Zn)	0.0200	0.164	2.0	0.6	0.0426	0.2175	SW45

+ - Value exceeds ARAR; _____ - Average exceeds background.

[ii] The average is computed by first determining the arithmetic mean concentration at individual wells/stations and then using this data to compute the arithmetic mean for the wells/stations in this group. If a datum indicates non-detected, the value used in the computation is one-half the detection limit.

NS-No Standard. U-Detection Limit. J Present below Detection Limit. B Present in Blank

Notes: Minimum, Maximum, and Average based on 1987/1988 Quarterly Data.
Background values based on upper limit of values found in well 55-86.
Wells/Stations in this group: SW45

TABLE 2-1 (Continued)
DISSOLVED RADIOCHEMISTRY CONCENTRATIONS
ABOVE ESTIMATED BACKGROUND FOR BUILDING 881 FOOTING DRAIN DISCHARGE
ALL CONCENTRATIONS IN pCi/1

Analyte	Background Value	ARAR Value	Reported when the maximum value exceeds Background: Maximum Value	Minimum Value	Average of All Values [ii]	Wells/Stations in which Background Value was exceeded
Gross Alpha	5	15	13.4	13.4	13	SW45
Gross Beta	14	50	15.1	15.1	15	SW45
Strontium 89, 90	1.0 [iii]	8				
Plutonium 239, 240	.01 [iii]	15	2.57	2.57	2.6	SW45
Americium 241	.01 [iii]	4				
Tritium	400 [iii]	20000				
Total Uranium	1.8 [iii]	40	10.2	10.2	10	SW45

+ - Value exceeds ARAR/; _____ - Average exceeds background.

[ii] The average is computed by first determining the arithmetic mean concentration at individual wells/stations and then using this data to compute the arithmetic mean for the wells/stations in this group. If a datum indicates a less than (<) value, or the counting error for a datum is greater than the datum, the value used in the computation is one half the minimum detectable activity (MDA).

NS-No Standard. U-Detection Limit. J-Present below Detection Limit. B-Present in Blank [iii]MDA Minimum Detectable Activity

Notes: Minimum, Maximum, and Average based on 1987/1988 Quarterly Data.
Background value based on upper limit of values found in well 55-86.
Wells/Stations in this group: SW45

TABLE 2-2
VOLATILE ORGANIC COMPOUND CONCENTRATIONS
ABOVE ESTIMATED BACKGROUND FOR ALLUVIAL WELLS AT THE 881 HILLSIDE
ALL CONCENTRATIONS IN ug/l

Analyte	Background Value		ARAR Value		Reported when the maximum value exceeds Background: Maximum Value		Minimum Value		Average of All Values [ii]	Wells/Stations in which Background Value was exceeded
Chloromethane	10	U								
Bromomethane	10	U								
Vinyl Chloride	10	U								
Chloroethane	10	U								
Methylene Chloride	5	U	5	U						
Acetone	10	U	50							
Carbon Disulfide	5	U	5	U						
1,1-Dichloroethene	5	U	7		7900	J +	5	U	2177 +	0974, 4387
1,1-Dichloroethane	5	U	5	U[i]	180	J +	5	U	40 +	0974, 4387
1,2-Dichloroethene (total)	5	U								
Chloroform	5	U								
1,2-Dichloroethane	5	U	5		17	J +	5	U	7 +	0974, 4387
2-Butanone	10	U								
1,1,1-Trichloroethane	5	U	200		15000 +		5	U	3310 +	0974, 1074, 4387
Carbon Tetrachloride	5	U	5		2400	J +	5	U	203 +	1074, 0487
Vinyl Acetate	10	U								
Bromodichloromethane	5	U								
1,2-Dichloropropane	5	U								
cis-1,3-Dichloropropene	5	U								
Trichloroethene	5	U	5		11000 +		5	U	2943 +	0974, 1074, 0487, 4387
Dibromochloromethane	5	U								
1,1,2-Trichloroethane	5	U	5	U	47	J +	5	U	15 +	0974, 4387
Benzene	5	U								
Trans-1,3-Dichloropropene	5	U								
2-Chloroethylvinylether	10	U								
Bromoform	5	U								
4-Methyl-2-pentanone	10	U								
2-Hexanone	10	U								
Tetrachloroethene	5	U	5	U	5900	J +	2	J	1076 +	0974, 1074, 0487, 4387
1,1,2,2-Tetrachloroethane	5	U								
Toluene	5	U	2000							
Chlorobenzene	5	U								
Ethylbenzene	5	U								
Styrene	5	U								
Total Xylenes	5	U								

[i] No standard, RCRA Appendix IX constituent, therefore background value is TBC. + - Value exceeds ARAR.

[ii] The average is computed by first determining the arithmetic mean concentration at individual wells/stations and then using this data to compute the arithmetic mean for the wells/stations in this group. If a datum indicates non-detected, the value used in the computation is one-half the detection limit.

NS-No Standard. U-Detection Limit. J-Present below Detection Limit. B-Present in Blank. Average exceeds background.

Notes: Minimum, Maximum, and Average based on 1989 first and second quarter data.
Background values based on upper limit of values found in well 55-86.
Wells/Stations in this group: 0974, 1074, 0187, 0487, 0687, 4387, 4987, 5087, 5187, 5287, 5387, 5487

TABLE 2-2 (Continued)
DISSOLVED METAL CONSTITUENT CONCENTRATIONS
ABOVE ESTIMATED BACKGROUND FOR ALLUVIAL WELLS AT THE 881 HILLSIDE
ALL CONCENTRATIONS IN mg/1

Reported when the maximum value exceeds Background

Analyte		Detec. Limit	Background Value	ARAR Value	Maximum Value	Minimum Value	Average of All Values ii	Wells/Stations in which Background Value was exceeded
Aluminum	(Al)	0.0290	0.223	5.0				
Antimony	(Sb)	0.0600	0.06 U	0.06 U	0.0798 %	0.006 J	0.0387	0974, 1074, 0487, 5287
Arsenic	(As)	0.0100	0.01 U	0.05				
Barium	(Ba)	0.0100	0.071	1.0	0.1774	0.0382	0.0922	0974, 0487, 0687, 4387, 5287
Beryllium	(Be)	0.0050	0.005 U	0.1				
Cadmium	(Cd)	0.0050	0.005 U	0.01				
Calcium	(Ca)	0.7500	33.8	NS	355.99	85.697	184	0974, 1074, 0487, 0687, 4387, 5287
Cesium	(Cs)	0.0200	0.02 U	NS	0.04 J	0.02 U	0.0111	0487
Chromium	(Cr)	0.0100	0.026	0.05	0.0782 %	0.0100 U	0.0086	0487
Copper	(Cu)	0.0063	0.046	0.2	0.9515 %	0.0063 U	0.0937	4387
Iron	(Fe)	0.0069	0.162	0.3	0.1739	0.0063 U	0.0322	0687
Lead	(Pb)	0.0050	0.016	0.05				
Lithium	(Li)	0.1000	0.1 U	2.5	0.7	0.02	0.1289	0974
Magnesium	(Mg)	0.0500	5.9	NS	73.274	19.547	44	0974, 1074, 0487, 0687, 4387, 5287
Manganese	(Mn)	0.0051	0.066	0.05	0.9586 %	0.0051 U	0.2405 +	0487, 0687, 4387, 5287
Mercury	(Hg)	0.0002	0.0002 U	0.002	0.0003	0.0002 U	0.0001	0687
Molybdenum	(Mo)	0.0220	0.022 U	0.1	0.0265	0.0220 U	0.0122	1074, 4387
Nickel	(Ni)	0.0370	0.037 U	0.20	0.8644 %	0.0370 U	0.1899	0487, 0687, 4387, 5287
Potassium	(K)	0.5000	0.8	NS	12.3	0.5	2.3500	0974, 1074, 0487, 0687, 4387, 5287
Selenium	(Se)	0.0050	0.005 U	0.01	3.2 +	0.003 J	0.5962 +	0974, 1074, 0487, 0687, 4387
Silver	(Ag)	0.0076	0.083	0.05				
Sodium	(Na)	2.1000	13.1	NS	341.74	124.79	196	0974, 1074, 0487, 0687, 4387, 5287
Strontium	(Sr)	0.0200	0.15	NS	2.4291	0.7136	1.4372	0974, 1074, 0487, 0687, 4387, 5287
Thallium	(Tl)	0.0100	0.01 U	0.01 U				
Vanadium	(V)	0.0240	0.024	0.1	0.0302	0.0240 U	0.0125	0487
Zinc	(Zn)	0.0200	0.164	2.0	2.4500 %	0.0200 U	0.3067	1074, 4387, 5287

+ - Value exceeds ARAR; _____- Average exceeds background.

ii The average is computed by first determining the arithmetic mean concentration at individual wells/stations and then using this data to compute the arithmetic mean for the wells/stations in this group. If a datum indicates non-detected, the value used in the computation is one-half the detection limit.

NS-No Standard. U-Detection Limit. J-Present below Detection Limit. B-Present in Blank

Notes: Minimum, Maximum, and Average based on 1987/1988 Quarterly Data.
Background values based on upper limit of values found in well 55-86.
Wells/Stations in this group: 0974, 1074, 0187, 0487, 0687, 4387, 4487, 4987, 5087, 5187, 5287, 5387, 5487

TABLE 2-2 (Continued)
INORGANIC CONSTITUENT CONCENTRATIONS
ABOVE ESTIMATED BACKGROUND FOR ALLUVIAL WELLS AT THE 881 HILLSIDE
ALL CONCENTRATIONS IN MG/L

Analyte	Background Value	ARAR Value	Reported when the maximum value exceeds Background: Maximum Value	Minimum Value	Average of All Values ii	Wells/Stations in which Background Value was exceeded
Total Dissolved Solids	167	400	2374 +	700 +	1345 +	0974, 1074, 0487, 0687, 4387, 5287
Chloride	19	250	458 +	2.90	2 51 +	0974, 1074, 0487, 0687, 4387, 5287
Nitrate+Nitrite as N	1.5	10	55 +	0.02 U	11 +	0974, 1074, 0487, 4387
Sulfate	27	250	700 +	133	297 +	0974, 1074, 0487, 0687, 4387, 5287
HCO3- as CaCO3	79	NS	502 +	112 +	317	0974, 1074, 0487, 0687, 4387, 5287

+ - Value exceeds ARAR; _____ - Average exceeds background.

ii The average is computed by first determining the arithmetic mean concentration at individual wells/stations and then using this data to compute the arithmetic mean for the wells/stations in this group. If a datum indicates non-detected, the value used in the computation is one-half the detection limit.

NS-No Standard. U-Detection Limit. J-Present below Detection Limit. B-Present in Blank

Notes: Minimum, Maximum, and Average based on 1987/1988 Quarterly Data.
Background values based on upper limit of values found in well 55-86.
Wells/Stations in this group: 0974, 1074, 0187, 0487, 0687, 4387, 4487, 4987, 5087, 5187, 5287, 5387, 5487

TABLE 2-2 (Continued)
DISSOLVED RADIOCHEMISTRY CONCENTRATIONS
ABOVE ESTIMATED BACKGROUND FOR ALLUVIAL WELLS AT THE 881 HILLSIDE
ALL CONCENTRATIONS IN pCi/1

Analyte	Background Value	ARAR Value	Reported when the maximum value exceeds Background: Maximum Value	Minimum Value	Average of All Values ii	Wells/Stations in which Background Value was exceeded
Gross Alpha	5	15	319 +	< 2.00	43 +	0974, 1074, 0187, 0487, 0687, 4387, 5287
Gross Beta	14	50	286 +	< 4.00	25	0974, 0487, 0687, 4387, 5287
Strontium 89, 90	1.0 iii	8	2.1	< 1.00	1.2	0487, 0687
Plutonium 239, 240	.01 iii	15				
Americium 241	.01 iii	4				
Tritium	400 iii	20000	777	<400.00	222	0487
Total Uranium	1.8 iii	40	54.6 +	8.7	29	0974, 1074, 0187, 0487, 0687, 4387, 5287

+ - Value exceeds ARAR/; _____- Average exceeds background.

ii The average is computed by first determining the arithmetic mean concentration at individual wells/stations and then using this data to compute the arithmetic mean for the wells/stations in this group. If a datum indicates a less than (<) value, or the counting error for a datum is greater than the datum, the value used in the computation is one half the minimun detectable activity (MDA).

NS-No Standard. U-Detection Limit. J-Present below Detection Limit. B-Present in Blank ***MDA-Minimum Detectable Activity

Notes: Minimum, Maximum, and Average based on 1987/1988 Quarterly Data.
Background values based on upper Limit of values found in well 55-86.
Wells/Stations in this group: 0974, 1074, 0187, 0487, 0687, 4387, 4487, 4987, 5087, 5187. 5287, 5387, 5487

TABLE 2-3
VOLATILE ORGANIC COMPOUND CONCENTRATIONS
ABOVE ESTIMATED BACKGROUND FOR ALLUVIAL WELLS DOWNGRADIENT OF THE 881 HILLSIDE
ALL CONCENTRATIONS IN ug/1

Analyte	Background Value		ARAR Value		Reported when the maximum value exceeds Background: Maximum Value		Minimum Value		Average of All Values [ii]	Wells/Stations in which Background Value was exceeded
Chloromethane	10	U								
Bromomethane	10	U								
Vinyl Chloride	10	U								
Chloroethane	10	U								
Methylene Chloride	5	U	5	U	17	B +	5	U	3	0287
Acetone	10	U	50		19		2	J	7	5587
Carbon Disulfide	5	U	5	U						
1,1-Dichloroethene	5	U	7							
1,1-Dichloroethane	5	U	5	U[i]						
1,2-Dichloroethene (total)	5	U								
Chloroform	5	U								
1,2-Dichloroethane	5	U	5							
2-Butanone	10	U								
1,1,1-Trichloroethane	5	U	200							
Carbon Tetrachloride	5	U	5							
Vinyl Acetate	10	U								
Bromodichloromethane	5	U								
1,2-Dichloropropane	5	U								
cis-1,3-Dichloropropene	5	U								
Trichloroethene	5	U	5							
Dibromochloromethane	5	U								
1,1,2-Trichloroethane	5	U	5	U						
Benzene	5	U								
Trans-1,3-Dichloropropene	5	U								
2-Chloroethylvinylether	10	U								
Bromoform	5	U								
4-Methyl-2-pentanone	10	U								
2-Hexanone	10	U								
Tetrachloroethene	5	U	5	U	35	J +	5	U	5 +	6486, 0287
1,1,2,2-Tetrachloroethane	5	U								
Toluene	5	U	2000							
Chlorobenzene	5	U								
Ethylbenzene	5	U								
Styrene	5	U								
Total Xylenes	5	U								

[i] No standard, RCRA Appendix IX constituent, therefore background value is TBC. + - Value exceeds ARAR.

[ii] The average is computed by first determining the arithmetic mean concentration at individual wells/stations and then using this data to compute the arithmetic mean for the wells/stations in this group. If a datum indicates non-detected, the value used in the computation is one-half the detection limit.

NS-No Standard. U-Detection Limit. J-Present below Detection Limit. B-Present in Blank. Average exceeds background.

Notes: Minimum, Maximum, and Average based on 1989 first and second quarter data.
Background values based on upper limit of values found in well 55-86.
Wells/Stations in this group: 6486, 6586, 6686, 6986, 0287, 4787, 4887, 5587

TABLE 2-3 (Continued)
DISSOLVED METAL CONSTITUENT CONCENTRATIONS
ABOVE ESTIMATED BACKGROUND FOR ALLUVIAL WELLS DOWNGRADIENT OF THE 881 HILLSIDE
ALL CONCENTRATIONS IN mg/1

Analyte		Detec. Limit	Background Value	ARAR Value	Reported when the maximum value exceeds Background: Maximum Value	Minimum Value	Average of All Values ii	Wells/Stations in which Background Value was exceeded
Aluminum	(Al)	0.0290	0.223	5.0	0.2600	0.0290 U	0.0441	6586, 0287
Antimony	(Sb)	0.0600	0.06 U	0.06 U	0.0618 %	0.02 U	0.0321	6986
Arsenic	(As)	0.0100	0.01 U	0.05				
Barium	(Ba)	0.0100	0.071	1.0	0.3110	0.0411	0.1326	6486, 6586, 6686, 6986. 0287, 4887
Beryllium	(Be)	0.0050	0.005 U	0.1				
Cadmium	(Cd)	0.0050	0.005 U	0.01				
Calcium	(Ca)	0.7500	33.8	NS	299.33	24.184	114	6486, 6586, 6686, 6986, 0287, 4887
Cesium	(Cs)	0.0200	0.02 U	NS				
Chromium	(Cr)	0.0100	0.026	0.05				
Copper	(Cu)	0.0063	0.046	0.2	0.3270 %	0.0063 U	0.0621	4887
Iron	(Fe)	0.0069	0.162	0.3	0.4065 %	0.0069 U	0.0446	6586, 0287
Lead	(Pb)	0.0050	0.016	0.05	0.024	0.001 J	0.0039	6586, 6686
Lithium	(Li)	0.1000	0.1 U	2.5				
Magnesium	(Mg)	0.0500	5.9	NS	95.507	5.4617	34	6486, 6586, 6686, 6986, 0287, 4887
Manganese	(Mn)	0.0051	0.066	0.05	0.5431 %	0.0051 U	0.1788 +	6486, 6586, 6686, 0287, 4887
Mercury	(Hg)	0.0002	0.000 U 2	0.002	0.006 %	0.0001 J	0.0004	6486, 6986, 0287
Molybdenum	(Mo)	0.0220	0.022 U	0.1	0.0533	0.0220 U	0.0204	6486, 0287, 4887
Nickel	(Ni)	0.0370	0.037 U	0.20	1.1827 %	0.0370 U	0.2377 +	6486, 6586, 6686, 6986, 4887
Potassium	(K)	0.5000	0.8	NS	7.0	0.7	2.2887	6486, 6586, 6686, 6986, 0287, 4887
Selenium	(Se)	0.0050	0.005 U	0.01	0.24 +	0.002 J	0.0297 +	6486, 6986, 4887
Silver	(Ag)	0.0076	0.083	0.05				
Sodium	(Na)	2.1000	13.1	NS	211.34	21.123	114	6486, 6586, 6686, 6986, 0287, 4887
Strontium	(Sr)	0.0200	0.15	NS	2.9066	0.1450	1.0202	6486, 6586, 6686, 6986, 0287, 4887
Thallium	(Tl)	0.0100	0.01 U	0.01 U				
Vanadium	(V)	0.0240	0.024	0.1	0.0368	0.0240 U	0.0130	6486
Zinc	(Zn)	0.0200	0.164	2.0	2.4559 %	0.02	0.4357	4887

+ - Value exceeds ARAR; _____ - Average exceeds background.

ii The average is computed by first determining the arithmetic mean concentration at individual wells/stations and then using this data to compute the arithmetic mean for the wells/stations in this group. If a datum indicates non-detected, the value used in the computation is one-half the detection limit.

NS-No Standard. U-Detection Limit. J-Present below Detection Limit. B-Present in Blank

Notes: Minimum, Maximum, and Average based on 1987/1988 Quarterly Data.
Background values based on upper limit of values found in well 55-86.
Wells/Stations in this group: 6486, 6586, 6686, 6986, 0287, 4787, 4887, 5587

TABLE 2-3 (Continued)
INORGANIC CONSTITUENT CONCENTRATIONS
ABOVE ESTIMATED BACKGROUND FOR ALLUVIAL WELLS DOWNGRADIENT OF THE 881 HILLSIDE
ALL CONCENTRATIONS IN MG/L

Analyte	Background Value	ARAR Value	Reported when the maximum value exceeds Background: Maximum Value	Minimum Value	Average of All Values ii	Wells/Stations in which Background Value was exceeded
Total Dissolved Solids	167	400	2081 +	163	816 +	6486, 6586, 6686, 6986, 0287, 4887
Chloride	19	250	838 +	17.0	188	6486, 6586, 6686, 6986, 0287, 4887
Nitrate+Nitrite as N	1.5	10	4.29	0.02 U	0.674	6986, 0287
Sulfate	27	250	270 +	24.8	139	6486, 6586, 6686, 6986, 0287, 4887
HCO3- as CaCO3	79	NS	401 +	73.9 +	245	6486, 6586, 6686, 6986, 0287, 4887

+ - Value exceeds ARAR; _____ - Average exceeds background.

ii The average is computed by first determining the arithmetic mean concentration at individual wells/stations and then using this data to compute the arithmetic mean for the wells/stations in this group. If a datum indicates non-detected, the value used in the computation is one-half the detection limit.

NS-No Standard. U-Detection Limit. J-Present below Detection Limit. B-Present in Blank

Notes: Minimum, Maximum, and Average based on 1987/1988 Quarterly Data.
Background values based on upper Limit of values found in well 55-86.
Wells/Stations in this group: 6486, 6586, 6686, 6986, 0287, 4787, 4887, 5587

TABLE 2-3 (continued)
DISSOLVED RADIOCHEHISTRY CONCENTRATIONS
ABOVE ESTIMATED BACKGROUND FOR ALLUVIAL WELLS DOWNGRADIENT OF THE 881 HILLSIDE
ALL CONCENTRATIONS IN pCi/1

Reported when the maximum value exceeds Background

Analyte	Background Value	ARAR Value	Maximum Value	Minimum Value	Average of All Values ii		Wells/Stations in which Background Value was exceeded
Gross Alpha	5	15	100 +	< 2.00	19	+	6486, 6586, 6686, 6986, 0287, 4887,
Gross Beta	14	50	254 +	< 4.00	18		6986, 0287
Strontium 89, 90	1.0 iii	8	5.6	< 1.00	3.3		6586, 6986, 0287
Plutonium 239, 240	.01 iii	15	0.211	< 0.01	0.014		0287
Americium 241	.01 iii	4					
Tritium	400 iii	20000	510	<400.00	211		6986
Total Uranium	1.8 iii	40	19.0	< 1.80	9.3		6486, 6586, 6986, 0287, 4887

+ - Value exceeds ARAR; _____ - Average exceeds background.

ii The average is computed by first determining the arithmetic mean concentration at individual wells/stations and then using this data to compute the arithmetic mean for the wells/stations in this group. If a datum indicates non-detected, the value used in the computation is one-half the detection limit.

NS-No Standard. U-Detection Limit. J-Present below Detection Limit. B-Present in Blank iii MDA-Minimum Detectable Activity

Notes: Minimum, Maximum, and Average based on 1987/1988 Quarterly Data.
Background values based on upper Limit of values found in well 55-86.
Wells/Stations in this group: 6486, 6586, 6686, 6986, 0287, 4787, 4887, 5587

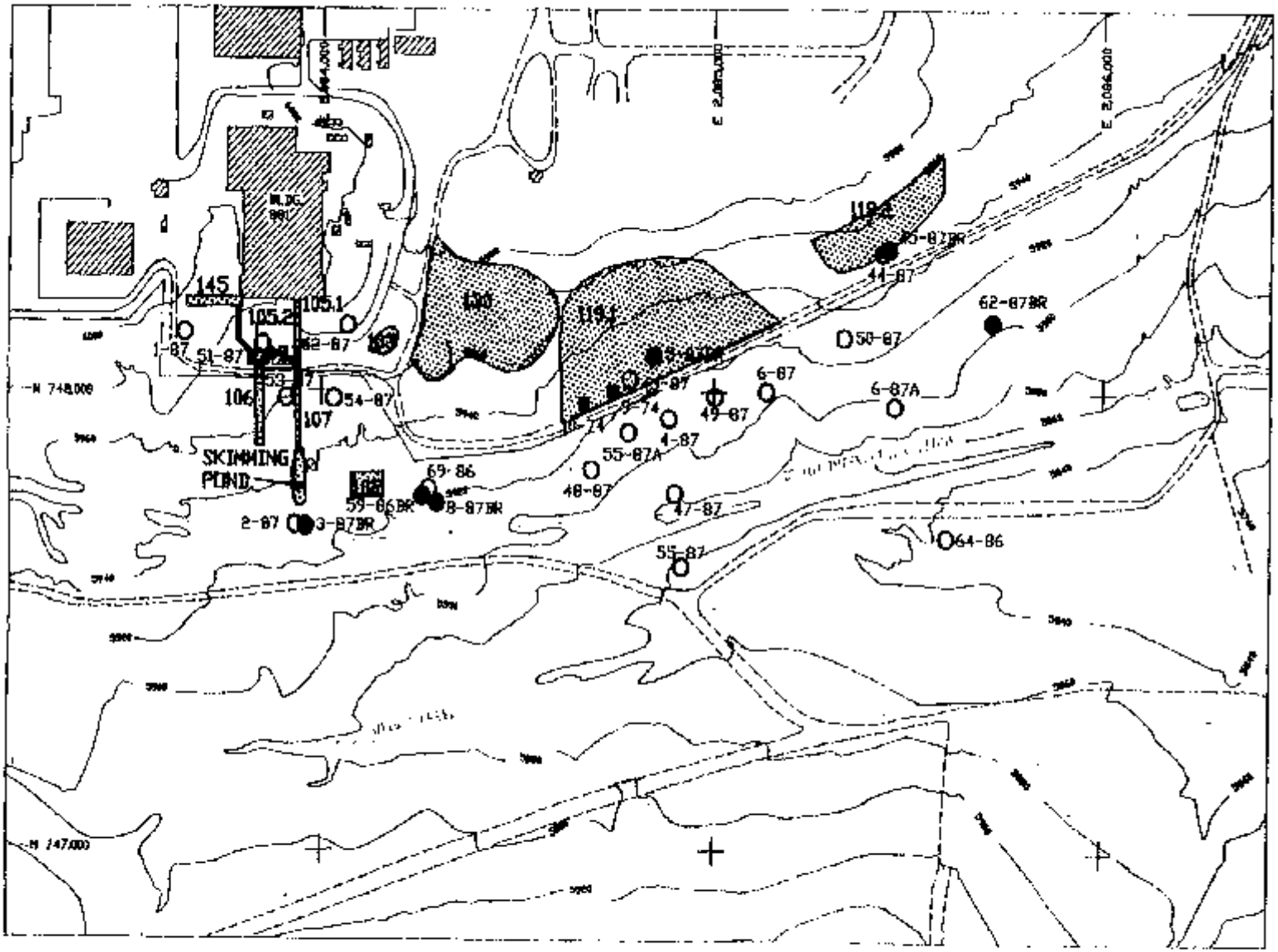

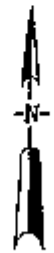

SCALE: 1"=300'

EXPLANATION

62-87BR ● BEDROCK MONITOR WE

64-86 ○ ALLUVIAL MONITOR WE

9-74 ■ PRE-1986 WELL

119.1 SOLID WASTE MANAGED UNITS

FIGURE 2-4

WELL LOCATIONS AT 88 HILLSIDE AREA

Alluvial ground water at the 881 Hillside Area is characterized by significant VOC contamination. High concentrations of VOCs are notably present in the vicinity of SWMU 119.1 at well 9-74. The maximum concentration for most of the metals exceed estimated alluvial ground-water background concentrations and ARARs. However, only the ARARs for manganese and selenium are exceeded for the average concentrations. Total dissolved solids, chloride, nitrate-nitrite, and sulfate have average values that exceed ARARs. Average dissolved strontium and uranium concentrations exceed background, but not ARAR.

Downgradient of the 881 Hillside Area, the alluvial ground-water chemistry is characterized by the absence of VOC contamination, with the exception of low concentrations of methylene chloride, acetone, and tetrachloroethene. The methylene chloride and acetone are suspected laboratory contaminants because of their presence in laboratory blanks. The tetrachloroethene was detected only in the first quarter 1989 in wells 64-86 and 2-87 at estimated concentrations below detection limits, and was not detected in these wells during second quarter 1989. Average concentrations of several metals, major ions, and strontium (89 + 90) and uranium are above the estimated background for alluvial ground water. Concentrations of these inorganic constituents are somewhat lower than at the 881 Hillside Area, and nitrate, chloride, and sulfate do not exceed ARAR on the average. Inorganic constituents have apparently migrated from the 881 Hillside Area, but organic contaminants have not migrated to any appreciable extent. There was only one occurrence of plutonium at a concentration above the minimum detectable activity (MDA). This occurred in well 2-87. Of the six plutonium concentrations measured at well 2-87, all except this one were below the MDA.

Volatile organic compounds are at high concentrations in the proximity of SWMU 119.1, but decrease to non-detcctable concentrations within approximately 300 feet (Rockwell International, 1988a). This rapid reduction in concentrations is in good agreement with the results of the soil gas surveys. The analysis of bedrock ground water for possible contamination is under investigation. A detailed sampling and analysis program of existing bedrock monitoring wells and background monitoring wells is currently being conducted.

2.1.6.2 Soil Contamination

Volatile organics data previously collected from the 881 Hillside Area have been rejected during the data validation process. Although these data cannot be used to definitely determine the extent of volatile organics contamination in this area, the data is summarized here because they likely provide some indication of the spatial distribution of organic contamination in the soils and the relative magnitude of the contamination.

Methylene chloride, acetone, and phthalates were generally ubiquitous contaminants in the samples collected from the 881 Hillside Area. There has been considerable debate as to whether they are truly contaminants of the soils. Methylene chloride and acetone may be laboratory contaminants because of the relatively high levels in many of the laboratory blanks. It is believed that the phthalate contamination may have resulted from sample handling with plastic gloves, however, no testing has been performed to verify this hypothesis.

Volatile chlorinated hydrocarbon contamination is apparently not extensive. It occurred above detection limits in soils from only 3 of the 23 boreholes. The highest concentrations detected were tetrachloroethene (PCE) at 190 micrograms per kilogram (Fg/kg), trichloroethene (TCE) at 150 Fg/kg, and 1,1,1-TCA at 110 Fg/kg. The actual maximum concentration of these compounds is unknown because they occurred in composite samples.

2.1.6.3 Surface-Water Contamination

Surface waters of Woman Creek and the South Interceptor Ditch flow to Ponds C-1 and C-2, respectively. Discharge from the ponds to Woman Creek is monitored in accordance with RFP's NPDES permit. Recently collected valid analytical data for the ponds indicates no VOCs are present, and radionuclides, metals, and major ions are within the estimated background levels identified in Section 6 of the 881 Hillside Area Draft Final Remedial Investigation Report for High Priority Sites (Rockwell International, 1988a). VOCs are present in the 881 Building footing drain which flows to Pond C-2; however VOCs are not found in

Pond C-2. Elevated levels of uranium-238 occur in the South Interceptor Ditch upgradient of the 881 Hillside Area, but concentrations decrease to background levels at Pond C-2. As part of the final RFI/RI, additional data will be gathered to re-evaluate the presence of contaminants in the surface water.

2.1.6.4 Sediment Contamination

Due to the presence of acetone and methylene chloride in laboratory blanks run with the sediment analyses, the presence of volatiles in the sediment samples cannot be confirmed. Additional sampling and analysis will be performed and evaluated as part of the final RFI/RI report.

2.2 ANALYTICAL DATA

Organic and inorganic contaminants exist in the ground water beneath the 881 Hillside Area. Appendix 1 lists the results of volatile organic and inorganic analyses from alluvial ground-water samples collected at the 881 Hillside Area from 1987 and 1988. Volatile organic analysis for the first and second quarter 1989 are also included.

2.3 SITE CONDITIONS THAT JUSTIFY AN IRA

There is no immediate threat to the public health and environment posed by groundwater contaminants at the 881 Hillside Area because the affected water is contained within the plant boundary. However, an unacceptable risk would be posed to the public by consumption of the contaminated alluvial ground water at or immediately downgradient of the 881 Hillside Area. Although consumption of this water is not likely, an IM/IRA will be implemented in order to prevent further contaminant migration from the 881 Hillside Area that could otherwise exacerbate final cleanup efforts at the site.

SECTION 3.0

IDENTIFICATION OF INTERIM REMEDIAL ACTION OBJECTIVES

3.1 DETERMINATION OF REMEDIAL ACTION SCOPE

The overall objective of the IM/IRA at the 881 Hillside Area is prevention of release and migration of alluvial ground-water contaminants downgradient, and the cleanup of alluvial ground-water contamination to within acceptable levels. The effort is to be performed in the interest of protecting public health as well as the environment.

Specific objectives of the IM/IRA are:

- Contain, reduce, and/or eliminate site contaminants identified as posing potential threats to human health or the environment.
- Reduce or eliminate exposure to site contaminants for potential receptors by controlling potential contaminant pathways.
- Demonstrate technical feasibility and environmental and cost effectiveness of the interim remedial action.

3.2 INTERIM REMEDIAL ACTON SCHEDULE

ACTIVITY	TIME FRAME
IM/IRA Plan	
Draft IM/IRA Plan	1 July 89 - 15 September 89
EPA/CDH Review	15 September - 22 September 89
Proposed IM/IRA Plan	25 September 89 - 6 October 89
IM/IRA Plan Public Review	12 October 89 - 27 November 89
Respond to Public Comments and Finalize Plan	28 November 89 - 5 January 90
Design	
Building Foundation & Slab (Phase I)	1 November 88 - 25 August 89
Tanks	1 November 88 - 7 August 89
UV/Peroxide Treatment System	1 November 88 - 18 August 89
Ion Exchange System	7 August 89 - 2 February 90
Building and Tank Foundations (Phase II)	14 August 89 - 10 November 89
Subsurface Investigation	15 January 90 - 10 May 90
Collection System	14 May 90 - 15 October 90

ACTIVITY	TIME FRAME
Procurement	
Influent Storage Tanks	7 August 89 - 27 October 89
UV/Peroxide System	18 August 89 - 10 August 90
Effluent Storage Tanks	15 January 90 - 23 April 90
Ion Exchange System	2 February 90 - 10 August 90
Construction	
Building Foundation and Slab Construction Contracting	2 January 90 - 15 January 90
Building Foundation and Slab Construction	15 January 90 - 7 May 90
Building and Tank Foundations Construction Contracting	12 February 90 - 6 April 90
Building and Tank Foundations Construction	7 May 90 - 24 August 90
Treatment System Construction Contracting	4 June 90 - 27 July 90
Treatment System Construction	24 August 90 - 18 December 90
Ground-Water Collection and Treatment *	19 December 90 - 21 January 91
Drain Collection System Construction Contracting	29 October 90 - 21 December 90
Drain Collection System Construction**	22 January 91 - 26 April 91
Drain Water Collection and Treatment (complete system)	26 April 91

* Ground water will be withdrawn from a well at SWMU 119.1 and treated as part of start-up and testing.

**Ground water collected from trench dewatering will be treated.

3.3 COMPLIANCE WITH APPLICABLE OR RELEVANT AND APPROPRIATE REQUIREMENTS

Response actions at Superfund sites must meet two fundamental clean-up requirements. First, they must attain a level of cleanup which, at a minimum, ensures protection of human health and the environment [CERCLA Section 121(d)(2), 42 U.S.C. Section 9621(d)(2)]. Second, it is EPA policy that CERCLA cleanups attain or exceed the requirements of all applicable or relevant and appropriate federal and state health and environmental requirements (ARARs). This section identifies and analyzes ARARs relevant to the IM/IRA at the 881 Hillside Area. This remedial action is considered an on-site IM/IRA; therefore, only substantive and not administrative requirements apply.

"Applicable standards" may be defined as substantive environmental protection requirements, criteria, or limitations, promulgated under federal or state law, that specifically address a hazardous substance, pollutant, contaminant, response action, location, or other

circumstances at a Superfund site. "Relevant and appropriate requirements" are those substantive environmental protection requirements, promulgated under federal or state law, that, while not jurisdictionally applicable to circumstances at the site, address problems sufficiently similar to those encountered at the site that their use is well suited to the particular site. ARARs must be identified on a site-specific, case-by-case basis.

In general, there are three categories of potential ARARs at any Superfund site. These categories are:

- Ambient or chemical-specific requirements.
- Locational requirements.
- Performance, design, or other action-specific requirements. Each category is discussed in more detail below.

3.3.1 Ambient or Chemical-Specific Requirements

Ambient or chemical-specific requirements set health- or risk-based concentration limits in various environmental media for specific hazardous substances or pollutants. These requirements set protective clean-up levels for the chemicals of concern in the designated media, or indicate a safe level of air emission or wastewater discharge.

Chemical-specific ARARs are derived primarily from federal and state health and environmental statutes and regulations. Health Effects Assessments, Health Advisories, Chemical Advisories, and Guidance Documents may also be considered when establishing clean-up standards, but are not considered to be ARARs. These and any proposed standards are classified as items to be considered, or TBCs. Where background concentrations for constituents are above the chemical-specific ARAR for that constituent, a variance from the ARAR is appropriate. A summary of chemical-specific ARARs for the contaminants found at the 881 Hillside Area is presented in Table 3-1. When more than one chemical-specific ARAR has been identified for a contaminant, a screening process is used to determine the specific ARAR to be applied. This screening process involves three steps as outlined below:

TABLE 3-1.1
CHEMICAL SPECIFIC ARARs
FOR COMPOUNDS AND ELEMENTS DETECTED
AT THE 881 HILLSIDE AREA

Chemical	Maximum In 881 Hillside Area Alluvial Ground Water[a]	ARAR (ug/l)	Standard Criteria or Guidance	Comment
Organic Compounds				
Acetone	19	50	RCRA LDR is relevant and appropriate (R&A)	ARAR is not exceeded
Carbon Tetrachloride	2400J	5	CDH Surface Water; Drinking Water Standard is applicable	ARAR is exceeded
1,1 Dichloroethane	180J	5U	RCRA Subpart F, Appendix IX Substance is TBC	TBC is exceeded
1,2 Dichloroethane	17J	5	CDH Surface Water; Drinking Water Standard is applicable	ARAR is exceeded
1,1 Dichloroethene	7900J	7	CDH Surface Water; Drinking Water Standard is applicable	ARAR is exceeded
Methylene Chloride	17B	5U	RCRA Subpart F is R&A	ARAR is exceeded
Tetrachloroethene	5900J	5U	CDH Surface Water; Fish and Water Ingestion Standard is applicable	ARAR is exceeded
Toluene	5J	2000	SDWA MCLG is R&A	ARAR is not exceeded
1,1,1 Trichloroethane	15,000	200	CDH Surface Water; Drinking Water Standard is applicable	ARAR is not exceeded
1,1,2 Trichloroethane	47J	5U	CDH Surface Water; Fish and Water Ingestion Standard is applicable	ARAR is exceeded
Trichloroethene	11,000	5	CDH Surface Water; Drinking Water Standard is applicable	ARAR is exceeded
Carbon Disulfide	3J	5U	CDH Surface Water; Drinking Water Standard is applicable	ARAR is not exceeded

TABLE 3.1-2
CHEMICAL SPECIFIC ARARs
FOR COMPOUNDS AND ELEMENTS DETECTED
AT THE 881 HILLSIDE AREA

Chemical	Maximum In 881 Hillside Area Alluvial Ground Water[b] (mg/l)	ARAR (mg/l)	Standard Criteria or Guidance	Comment
Metals				
Aluminum	0.26	5.0	CDH Agriculture Standard is applicable	ARAR is not exceeded
Antimony	0.0798	0.06U	RCRA Subpart F is R&A	ARAR is exceeded
Arsenic	0.010	0.05	CDH Surface Water; Drinking Water Standard is applicable	ARAR is not exceeded
Barium	0.3110	1.0	CDH Surface Water; Drinking Water Standard is applicable	ARAR is not exceeded
Beryllium	0.003J	0.1	CDH Agriculture Standard is applicable	ARAR is not exceeded
Cadmium	0.0017	0.01	CDH Surface Water; Drinking Water Standard is applicable	ARAR is not exceeded
Calcium	355.99	NS	No Standard	--
Cesium	0.04J	NS	No Standard	Background is TBC
Chromium III	0.0782	.05	CDH Surface Water; Drinking Water Standard is applicable	Analytical result is total chromium. ARAR may be exceeded
Chromium VI	0.0782	.05	CDH Surface Water; Drinking Water Standard is applicable	Analytical result is total chromium. ARAR may be exceeded
Copper	0.9515	0.2	CDH Agriculture Standard is applicable	ARAR is exceeded

TABLE 3-1.2 (cont.)
CHEMICAL SPECIFIC ARARs
FOR COMPOUNDS AND ELEMENTS DETECTED
AT THE 881 HILLSIDE AREA

Chemical	Maximum In 881 Hillside Area Alluvial Ground Water[b] (mg/l)	ARAR (mg/l)	Standard Criteria or Guidance	Comment
Metals (cont.)				
Iron	0.4065	0.3	CDH Surface Water; Drinking Water Standard is applicable	Analytical results are soluble Iron; soluble iron exceeds ARAR
Lead	0.024	0.05	CDH Surface Water; Drinking Water Standard is applicable	ARAR is not exceeded not exceeded
Lithium	0.7	2.5	CDH Ground Water Standard is applicable	ARAR is not exceeded
Magnesium	95.507	NS	No Standard	--
Manganese	0.9586	0.05	CDH Surface Water; Drinking Water Standard is applicable	Analytical results are soluble manganese; ARAR is exceeded
Mercury	0.9	0.002	CDH Surface Water; Drinking Water Standard is applicable	ARAR is exceeded
Molybdenum	0.0533	0.1	CDH Agriculture Standard is applicable	ARAR is not exceeded
Nickel	1.1827	0.2	CDH Agriculture Standard is applicable	ARAR is exceeded
Potassium	12.3	NS	No Standard	--
Selenium	3.2	0.01	CDH Surface Water; Drinking Water Standard is applicable	ARAR is exceeded

TABLE 3-1.2 (cont.)
CHEMICAL SPECIFIC ARARs
FOR COMPOUNDS AND ELEMENTS DETECTED
AT THE 881 HILLSIDE AREA

Chemical	Maximum In 881 Hillside Area Alluvial Ground Water[b] (mg/l)	ARAR (mg/l)	Standard Criteria or Guidance	Comment
Metals (cont.)				
Silver	0.0094	0.05	CDH Surface Water; Drinking Water Standards is applicable	ARAR is not exceeded
Sodium	341.74	NS	No Standard	–
Strontium	2.9066	NS	No Standard	Background is TBC
Thallium	0.01	0.01U	RCRA Subpart F is R&A	ARAR is exceeded
Vanadium	0.0368	0.1	CDH Agriculture Standard is applicable	ARAR is not exceeded
Zinc	2.4559	2.0	CDH Agriculture Standard is applicable	ARAR is exceeded

TABLE 3-1.3
CHEMICAL SPECIFIC ARARs
FOR COMPOUNDS AND ELEMENTS DETECTED
AT THE 881 HILLSIDE AREA

Chemical	Maximum In 881 Hillside Area Alluvial Ground Water[b] (mg/l)	ARAR (mg/l)	Standard Criteria or Guidance	Comment
Conventional Pollutants				
pH	5.6-8.5	6.5-9.0	CDH Ground Water Standard is applicable	ARAR is exceeded
Nitrite	-	1.0	CDH Ground Water Standard is applicable	Analytical results are total nitrate plus nitrate nitrogen. Reanalysis required to determine if nitrite ARAR is exceeded.
Nitrate	55	10.0	CDH Ground Water Standard is applicable	Analytical results are total nitrate nitrogen. Results indicate that nitrate ARAR is exceeded.
Chloride	838	250	CDH Ground Water Standard is applicable	ARAR is exceeded
Sulfate	700	250	CDH Ground Water Standard is applicable	ARAR is exceeded
Bicarbonate as $CaCO_3$	502	NS	No Standard	
T.D.S.	2374	400	CDH Ground Water Standard is applicable	ARAR is exceeded

TABLE 3-1.4
CHEMICAL SPECIFIC ARARs
FOR COMPOUNDS AND ELEMENTS DETECTED
AT THE 881 HILLSIDE AREA

Chemical	Maximum In 881 Hillside Area Alluvial Ground Water[b] (pCi/l)	ARAR (pCi/l)	Standard Criteria or Guidance	Comment
Radionuclides				
Gross Alpha	319	15	CDH Ground Water Standard is is applicable	ARAR is exceeded
Gross Beta	286	50[d]	SDWA MCL is applicable	ARAR is exceeded
$_{Pu}$ 238,239,240	<0.1[c]	15	CDH Surface Water Standard is applicable	ARAR is not exceeded
$_{Am}$241	<0.1[c]	4	CDH Surface Water Standard is applicable	ARAR is not exceeded
$_{H}$3	777	20,000	CDH Surface Water Standard is applicable	ARAR is not exceeded
$_{Sr}$ 89,90	5.6	8	CDH Surface Water Standard is applicable	ARAR is not exceeded
$_{Uranium}$total	58.9	40	CDH Surface Water Standard is applicable	ARAR is exceeded

(a) - Maximum compound concentrations determined from first and second quarter 1989 data.
(b) - Maximum compound concentrations determined from 1987 and 1988 database.
U - Detection limit
J - Estimated below detection limit
B - Compound also present in blank
TBC - To be considered
(c) - Below minimum detectable activity (MDA)
(d) - Actual Standard is 4 millirem per year. 50 pCi/l is the criterion where it is necessary to analyze specific man-made beta emitting isotopes to determine compliance with standard.

1. The most stringent human health or agricultural-based promulgated standard among the Safe Drinking Water Act (SDWA), Maximum Contaminant Level (MCL), and CDH ground and surface water standards is first applied (applicable).

2. For a RCRA Appendix VIII hazardous constituent, in the absence of any promulgated standard in step 1 above, the most stringent RCRA Land Disposal Restriction or RCRA Subpart F limit is applied (relevant and appropriate).

3. In the absence of an ARAR in steps 1 or 2 above, the most stringent of the Clean Water Act Water Quality Criteria, or the proposed CDH ground water and surface water standards is applied (TBC).

Screening for these ARARs is presented in Table 3-2. The screening process includes consideration of both ground water and surface water standards because in the proposed IM/IRA (see Section 6.0), treated ground water is discharged to the South Interceptor Ditch (SID). The surface water in the SID often infiltrates the alluvium and recharges the alluvial ground water. Of the elements/compounds detected in alluvial ground water at the 881 Hillside Area, there are no ARARs for calcium, magnesium, potassium, sodium, bicarbonate, cesium, and strontium. However, the total dissolved solids ARAR establishes the acceptable aggregate concentration for the above major ions (excludes cesium and strontium). Until an acceptable risk based concentration is established for cesium and strontium, their background concentrations are TBC.

3.3.1.1 Safe Drinking Water Act Maximum Contaminant Levels (MCLs) and MCL Goals

Because ground water beneath the 881 Hillside Area is a potential source of drinking water, Maximum Contaminant Levels (MCLs) are applicable for all phases of the IM/IRA. MCLs are derived from the Safe Drinking Water Act (PL 93-523). They represent the maximum permissible level of a contaminant in water which is delivered to the free-flowing outlet of the ultimate user of a public water system [40 CFR 141.2(C)]. Maximum Contaminant Level Goals (MCLGs) have also been considered in developing clean-up standards. Section 121(d) of CERCLA as amended by SARA suggests that MCLGs may be appropriate under certain circumstances of the release or threatened release of hazardous substances. This is reinforced in EPA's document entitled, Draft CERCLA Compliance with Other Laws Manual,

TABLE 3-2.1
SCREENING OF CHEMICAL SPECIFIC ARARs
PERTINENT TO 881 HILLSIDE AREA IN/IRA OPTIONS

Chemical	RCRA Subpart F Concentration Limit[a] (ug/l)	CDH Ground Water Quality Standards [b] (ug/l)	SDWA Maximum Contaminant Level (MCL)[c] (ug/l)	For Use In Special Circumstances SDWA/MCLG[d] (ug/l)	RCRA Land Disposal Restrictions (ug/l)[k]	CWA Ambient Water Quality Criteria for Protection of Aquatic Life Freshwater Acute/Chronic (ug/l)	CDH Surface Water Quality Standards[e] (ug/l)	ARAR (ug/l)	Comment
Organic Compounds									
Acetone	10U[m]	-	-	-	50	-	-	50	RCRA LDR is relevant and appropriate (R&A)
Carbon Tetrachloride	5U	5	5	0	50	35,000/	5	5	CDN Surface Water Drinking Water Standard is applicable
1,1 Dichloroehane	5U[m]	-	-	-	-	-	-	5u	RCRA Subpart F TBC[l]
1,2 Dichloroethane	5U[m]	5	5	0	-	110,000/20,000[g]	5	5	CDH Surface Water Drinking Water Standard is applicable
1,1 Dichloroethene	5U	7	7	7	-	11,000[g]/	7	7	CDH Surface Water; Drinking Water Standard is applicable
Methylene Chloride	5U	-	-	-	200	-	-	5U	RCRA Subpart F is R&A
Tetrachloroethene	5U	0.8	-	0[g]	79	5,200/840[g]	0.8	5U	CDH Surface Water; Fish and Water Ingestion Standard (0.8 ug/l) is BDL, so detection limit of 5 ug/l is applicable

TABLE 3-2.1 (cont.)
SCREENING OF CHEMICAL SPECIFIC ARARs
PERTINENT TO 881 HILLSIDE AREA IN/IRA OPTIONS

Chemical	RCRA Subpart F Concentration Limit[a] (ug/L)	CDH Ground Water Quality Standards [b] (ug/L)	SDWA Maximum Contaminant Level (MCL) (ug/L)	For Use In Special Circumstances SDWA/MCLG[d] (ug/L)	RCRA Land Disposal Restrictions (ug/L)[k]	CWA Ambient Water Quality Criteria for Protection of Aquatic Life Freshwater Acute/Chronic (ug/L)	CDH Surface Water Quality Standards[e] (ug/L)	ARAR (ug/L)	Comment
Organic Compounds (cont.)									
Tolune	5U	14,300	-	2,000	1,120	17,000[g/]	2,420	2000	SDWA MCLG is R&A
1,1,1 Trichloroethane	5U[m]	200	200	200	1,050	-	200	200	CDM Surface Water; Drinking Water Standard is applicable
1,1,2 Trichloroethane	5U	0.6	-	-	-	-	0.6	5U	CDM Surface Water; fish and Water Ingestion Standard (0.6 ug/l) is BDL, so detection limit of 5 ug/l is applicable
Trichloroethene	5U	5	5	0	62	45,000/21,000[g]	5	5	CDH Surface Water; Drinking Water Standard is applicable
Carbon Disulfide	5U	-	-				-	5U	RCRA Subpart F is R&A

U - Detection Limit
(a) - 40 CFR Part 264.92 Subpart F releases from solid waste management units. (40 CFR 261, Appendix VIII, List of Hazardous Constituents)
(b) - 5 CCR 1002-8, Section 3.11.5, Basic Standards for Ground Water August 17, 1989.
(c) - 40 CFR Part 141.61 National Primary Drinking Water Standards.
(d) - 40 CFR Part 141.50 National Primary Drinking Water Standards.
(e) - 5 CCR 1002-8, Section 3.8.29, Temporary Rule Adopted July 11, 1989.
(g) - Lowest observed effect level.
(h) - Proposed value Federal Register 46936 (Nov. 13, 1985).
(i) - To be considered, The most recent EPA Guidance on the identification of ARARs states that existing criteria, advisories, guidance, or proposed standards should be considered for a chemical in the absence of a promulgated standard.
(j) - Proposed value Oct. 1986.
(k) - 40 CFR Part 268.41 subpart D - Treatment Standards.
(m) - RCRA 40 CFR, Appendix IX Ground Water Monitoring List Substance Not Included in 40 CFR 261, Appendix VIII, List of Hazardous Constituents

TABLE 3-2.2
SCREENING OF CHEMICAL SPECIFIC ARARs
PERTINENT TO 881 HILLSIDE AREA IN/IRA OPTIONS

Chemical	RCRA Subpart F Concentration Limit[a] (ug/l)	CDH Ground Water Quality Standards[b] (ug/l)	SDWA Maximum Contaminant Level (MCL) (ug/l)	For Use In Special Circumstances SDWA/MCLG[d] (ug/l)	CWA Ambient water Quality Criteria for Protection of Aquatic Life Freshwater Acute/Chronic (ug/l)	CDH Surface Water Quality Standards[e] Drinking Water/ Agriculture (mg/l)	ARAR (ug/l)	Comment
Metals								
Aluminum	-	/5.0	-	-	-	-	5.0	CDN Agriculture Standard is applicable
Antimony	0.06U	-	-	-	9.0/1.6	-	0.06U	RCRA Subpart F is R&A
Arsenic	0.05	0.05/0.1	0.05	-	0.8[g]/.048[g]	0.05/0.1	O.05	CDH Surface Water; Drinking Standards applicable
Barium	1.0	1.0/	1.0	1.5[f]	-	-	1.0	CDH Surface Water; Drinking Standards applicable
Beryllium	0.005U	/0.1	-	-	0.1[g]/.0053[g]	/0.1	0.1	CDH Agriculture Standard is applicable
Cadmium	0.01	0.01/0.01	0.01	0.005	0.0039[h]/0.0011[h]	0.01/0.01	0.01	No standard
Calcium	-	-				-	NS	No standard
Cesium	-	-				-	NS	Background is TBC
Chromium III	0.05 (tot)	0.05/0.1	-	-	1.7[h]/0.2[h]	0.05/0.1	.05	CDH Surface Water; Drinking Water Standard is applicable
Chromium VI	0.05 (tot)	0.05/0.1	0.05	0.0012	0.016/.011	0.05/0.1	.05	CDH Agriculture Standard is applicable
Copper	0.046	1.0/0.2	1.0	1.3[f]	0.018[h]/0.012[h]	1.0/0.2	0.2	CDH Agriculture Standard is applicable
Iron	-	0.3/5.0	0.3	-	-	0.3/	0.3	CDH Surface Water; Drinking Water Standard is applicable

TABLE 3-2.2 (cont.)
SCREENING OF CHEMICAL SPECIFIC ARARs
PERTINENT TO 881 HILLSIDE AREA IN/IRA OPTIONS

Chemical	RCRA Subpart F Concentration Limit[a] (ug/l)	CDH Ground Water Quality Standards [b] (ug/l)	SDWA Maximum Contaminant Level (MCL) (ug/l)	For Use In Special Circumstances SDWA/MCLG[d] (ug/l)	CWA Ambient Water Quality Criteria for Protection of Aquatic Life Freshwater Acute/Chronic (ug/l)	CDH Surface Water Quality Standards[d] Drinking Water/ Agriculture (mg/l)	ARAR (ug/L)	Comment
Metals (cont.)								
Lead	0.05	0.05/0.1	0.05	0.002[f]	.0082[h]/.0032	0.05/0.1	0.05	CDN Surface Water; Drinking Water Standard is applicable;
Lithium	-	2.5				-	2.5	CDH Ground Water Standard is applicable
Magnesium	-	-				-	NS	No Standard
Manganese	-	0.05/0.2	0.05	-	-	0.05/0.2	0.05	CDN Surface Water; Drinking Water Standard is applicable
Mercury	0.002	0.002/0.01	0.002	0.003	.0024/.000012	0.002	0.002	CDH Surface Water; Drinking Water Standard is applicable
Molybdenum	-	/0.1	-	-	-	-	0.1	CDH Agriculture Standard is applicable
Nickel	0.0185	/0.20	-	-	1.8[h]/.096[h]	/0.2	0.2	CDH Agriculture Standard is applicable
Potassium	-	-				-	NS	No Standard
Selenium	0.01	0.01/0.02	0.01	0.045[f]	0.26/0.35	0.01/0.02	0.01	CDN Surface Water; Drinking Water Standard is applicable
Silver	0.05	0.05/	0.05	-	.0041[h]/.00014	0.05/	0.05	CDN Surface Water; Drinking Water Standard is applicable
Sodium	-	-				-	NS	No Standard

TABLE 3-2.2 (cont.)
SCREENING OF CHEMICAL SPECIFIC ARARs
PERTINENT TO 881 HILLSIDE AREA IN/IRA OPTIONS

Chemical	RCRA Subpart F Concentration Limit[a] (mg/l)	CDH Ground Water Standards Human Health/ Agriculture[b] (mg/l)	SDWA Maximum Contaminant Level (MCL) (mg/l)	For Use In Special Circumstances SDWA/MCLG[d] (mg/l)	CWA Ambient Water Quality Criteria for Protection of Aquatic Life Freshwater Acute/Chronic (mg/l)	CDH Surface Water Quality Standard[d] Drinking Water/ Agriculture (mg/l)	ARAR (mg/l)	Comment
Metals (cont.)								
Strontium	-	-				-	NS	Background in TBC
Thallium	0.01U	-	-	-	1.4[g]/.04[g]	-	0.01U	RCRA Subpart F is R&A
Vanadium	0.024	/0.1	-	-	-	-	0.1	CDH Agriculture Standard is applicable
Zinc	0.0517[J]	5.0/2.0	5.0	-	0.32[h]/0.047[h]	5.0/2.0	2.0	CDN Agriculture Standard is applicable

TBC - To be considered
BDL - Below Detection Limit
(a) - 40 CFR Part 264,92 Subpart F Released from solid waste management units
(b) - 5 CCR 1002-8, Selection 3.11.5, Ground Water Quality Standards
(c) - 40 CFR Part 141.11 National Primary Drinking Water Standards
(d) - 5 CCR 1002-8, Selection 3.8.29, Temporary Rule adopted July 11, 1989 (Total Recoverable Concentrations)
(f) - Proposed value as of October 1986
(g) - Lowest Observed Effect Level
(h) - Hardness dependent criteria (100 mg/L)
(j) - RCRA 40 CFR 264, Appendix IX, Ground Water Monitoring List Substance not Included in 40 CFR 261, Appendix VIII, List of Hazardous Constituents

TABLE 3-2.3
SCREENING OF CHEMICAL SPECIFIC ARARs
PERTINENT TO 881 HILLSIDE AREA IN/IRA OPTIONS

Chemical	RCRA Subpart F Concentration Limit[a] (ug/l)	CDH Ground Water Standards Human Health/ Agriculture[b] (mg/l)	SDWA Maximum Contaminant Level (MCL)[c] (mg/l)	For Use In Special Circumstances SDWA/MCLG[d] (mg/l)	CWA Ambient Water Quality Criteria for Protection of Aquatic Life Freshwater Acute/Chronic (mg/l)	CDH Surface Water Quality Standard[d] Drinking Water/ Agriculture (mg/l)	ARAR (mg/l) unless otherwise noted	Comment
Conventional Pollutants								
pH	-	6.5-8.5	6.5-8.5[f]	-	-	65-9.0 units	6.5-9.0	CDH Surface Water Quality Standard is applicable
Nitrite	-	1.0 as N/ 10.0 as N	-	-	-	1[g]/10[h]		CDH Ground Water Standard is applicable
Nitrite	-	10.0 as N/ 100 as NO_2+NO_3-N	10	-	-	10[i]/100[h]	10.0	CDH Ground Water Standard is applicable
Chloride	-	250/	250		-	250/	250	CDH Ground Water Standard is applicable
Sulfate	-	250/	250[f]		-	250/	250	CDH Ground Water Standard is applicable
Bicarbonate	-	-				-	NS	No Standard
T.D.S.	-	400 mg/l or 1.25 times background, whichever is least restrictive	500[f]	-	-	-	400	CDH Ground Water Standard is applicable

(a) - 40 CFR Part 264,92 Subpart F releases from solid waste management units
(b) - 5 CCR 1002-8, Section 3.11,5, Groundwater Quality Standards
(c) - 40 CFR Part 141.11 (b,c) National Primary Drinking Water Standards
(d) - 5 CCR 100.2-8, Section 3.8.29, Temporary Rule Adopted July 11, 1989.
(f) - 40 CFR Part 143.3 National Secondary Drinking water Standards
(g) - To be applied at the point of water supply intake
(h) - In order to provide such a reasonable margin of safety to allow for unusual situations such as extremely high water ingestion or nitrite formation in slurries, the NO_3-N plus NO_2-N content in drinking waters for livestock and poultry should be lilmited to 100 ppm or less, and the no_2-N content alone be limited to 10 ppm or less.
(i) - A combined total of Nitrite and Nitrite at the point of intake to the domestic water supply shall not exceed 10 mg/l[2].

TABLE 3-2.4
SCREENING OF CHEMICAL SPECIFIC ARARs
PERTINENT TO 881 HILLSIDE AREA IN/IRA OPTIONS

Chemical	RCRA Subpart F Concentration Limit[a] (pCi/l)	CDH Ground Water Quality Standards[b] (pCi/l)	SDWA Maximum Contaminant Level (MCL)[c] (pCi/l)	For Use In Special Circumstances SDWA/MCLG[d] (pCi/l)	CWA Ambient Water Quality Criteria for Protection of Aquatic Life Freshwater Acute/Chronic (pCi/)	CDH Surface Water Quality Standard[e] (pCi/l)	ARAR (pCi/l)	Comment
Radionuclides								
#Gross Alpha	-	15	15	-	-	-	15	CDH Ground Water Standard is applicable
Gross Beta		4mrem/yr[e]	50	-	-	-	50	SDWA MCL is applicable
$_{Pu}$238,239,240	-	15	40[f]	-	-	15	15	CDH Surface Water Standard is applicable
$_{Am}$241	-	-	4[f]	-	-	30	4	CDH Surface Water Standard is applicable
H^3	-	20,000	20,000	-	-	20,00	20,000	CDH Surface Water Standard is applicable
Sr^{90}	-	8	8	-	-	8	8	CDH Surface Water Standard is applicable
Uranium[total]	-	-	-	-	-	40	40	CDH Surface Water Standard is applicable

(a) - 5 CCR 1002-8, Section 3.11.5(B), Basic Standards Applicable to Ground Waters of the State
(b) - 40 CFR Parts 141.5, 16, National Primary Drinking Water Standards
(c) - 5 CCR 1002-8, Section 3.8.29, Temporary Rule Adopted July 11, 1989.
(e) - For Beta and photon emitters, if two or more radionuclides are present, the sum of their annual dose equivalent to the total body or to any organ shall not exceed 4 mrem per year. Except for Tritium and Strontium 90 the concentration of man-made radionuclides including 4 mrem total body or organ dose equivalents shall be calculated on the basis of a 2 liter per day drinking water intake using the 168-hour data listed in "Maximum Permissible Body Burden and Maximum Permissible Concentration of Radionuclides in Air or Water for Occupational Exposure," NBS Handbook 69, as amended, August 1963, US Department of Commerce.
(f) - Proposed value in drinking water yielding a risk equal to that from a dose rate of 4 mrem/year, September 30, 1986 (51 CFR 34859).

Volume II. Maximum Contaminant Level Goals, (EPA, June 1987, that identifies the special circumstances where MCLGs should be considered as ARAR. These circumstances generally occur when there are multiple contaminants in ground water, or where multiple pathways of exposure present extraordinary risks. According to the guidance document, the use of MCLGs should be determined on a site-specific basis in consultation with EPA headquarters.

The clean-up criteria for the interim remedial action at the 881 Hillside Area consider MCLs and MCLGs as ARAR wherever such standards have been promulgated for the contaminants of concern. Proposed MCLs and MCLGs are considered TBCs in theis analysis.

3.3.12 Ambient Water Quality Criteria

The Ambient Water Quality Criteria are nonenforceable guidance developed under the Clean Water Act. Guidance is set for surface waters for the protection of aquatic life and for the protection of human health, based on both drinking water and consuming aquatic organisms from that water. Since the IM/IRA proposed here involves the treatment and subsequent discharge to surface water, the Water Quality Criteria are TBC.

3.3.1.3 Colorado Surface and Ground-Water Quality Standards

The Colorado department of Health (CDH) has adopted interim ground-water quality standards for many organic compounds. These are considered applicable for the constituents where they exist Some of the standards are lower than the current standard detection limits for the compounds of concern. When this occurs, the detection limit will be considered as ARAR.

The CDH has also promulgated ground-water quality standards for many inorganic compounds for both human health and agricultural uses. These standards are considered applicable since future or down gradient use of the aquifer is not restricted. Where standards

exist for both human health and agriculture uses, the more stringent standards is considered to be the ARAR.

On July 11, 1989, the CDH adopted temporary surface-water quality standards for Walnut Creek and Woman Creek. These include standards for many organic, inorganic and radionuclide parameters. These temporary standards are in effect until March 30, 1990 (unless permanent standards are adopted at and earlier date) and are considered applicable.

3.3.1.4 RCRA Ground-Water Protection Standards

Owners or operators of facilities that treat, store, or dispose of hazardous waste must ensure that hazardous constituents identified in 6 CCR 1007-3 and 40 CFR 261, Appendix VIII, entering the ground water from a regulated unit do not exceed concentration limits under 6 CCR 1007-3 and 40 CFR 264.94. The concentration limits include standards for fourteen compounds,. with background used as the standard for the other RCRA Appendix VIII constituents. These concentration limits apply to RCRA-regulated units subject to permitting (landfills, surface impoundments, waste piles, and land treatment units) that recieved RCRA hazardous waste after July 26,1982, Although this area does not contain RCRA-regulated units, it does contain Solid Waste Management Units. Therefore, the RCRA clean-up criteria for Appendix VIII constituents are relevant and appropriate and are used to define ARARs in the absence of any human-health based standards. Background concentrations for 40 CFR 264, Appendix IX constituents not listed in Appendix VIII are TBC.

RCRA land disposal restrictions (LDRs) for certain organic contaminants (40 CFR 268.40) are considered relevant and appropriate effort the discharge of treated ground water to either surface water or ground water. The LDRs are technology based standards and are considered relevant and appropriate in the absence of a health based standard.

3.3.2 Locational Requirements

Locational requirements are statutes or regulations which set restrictions on activities of limits on contaminant levels, depending on the characteristics of a site or its immediate environs. Examples of locational requirements are federal and state siting laws for hazardous waste facilities, or sites on the National Register of Historic Places. Also included are the Wilderness Protection Act and floodplain regulations promulgated pursuant to the Federal Emergency Management Agency's National Flood Insurance Program.

Location-specific ARARs that are relevant and appropriate are the State of Colorado siting criteria for RCRA treatment units, and for surface-water discharges, the CDH Water Quality Division's regulations pertaining to pre-approval of treatment facility location.

3.3.3 Performance, Design, or Other Action-Specific Requirements

Performance, design, or other action-specific requirements set controls or restrictions on particular kinds of activities related to management of hazardous substances or pollutants. These requirements are not triggered gy the specific chemicals present at a site, but rather by the particular IM/IRA alternatives that are evaluated as part of this plan. Action-specific ARARs are technology-based performance standards, such as the Best Available Technology standard of the Federal Water Pollution Control Act. Other examples include RCRA treatment, storage, and disposal standards, Clean Water Act pretreatment standards for discharges to publicly-owned treatment wor4ks 9POTWs) and the Colorado Hazardous Waste Regulations. Action specific ARARs for the interim remedial actions evaluated here are included in Table 3-3.

TABLE 3-3
SCREENING OF PROBABLE ACTION SPECIFIC ARARS
FOR REMEDIAL ACTIONS AT THE 881 HILLSIDE AREA

Action	Requirement	Prerequisite	Citation	ARAR	Comments
Treatment	**BDAT** standards for spent solvent wastes and dioxin-containing wastes are based on one of four technologies or combinations; for waste water, (1) steam stripping, (2) biological treatment, or (3) carbon absorption [alone or in combination with (1) or (2); and for all other wastes, incineration. Any technology may be used, however, if it will achieve the concentration levels specified.	Effective November 8, 1988, disposal of contaminated soil or debris resulting from CERCLA response action or RCRA corrective actions is subject to land disposal prohibitions and/or treatment standards established for spent solvent wastes, dioxin containing wastes, and "California List" waste.	RCRA Sections 3004 (d)(3), (e)(3) 42 U.S.C. 6924(d)(3),(e)(3)	Applicable	Movement of excavated soil onsite or transportation of soil offsite for disposal must be treated to attain levels achievable by best demonstrated available treatment technologies before being land-disposed.
Capping	Placement of a cap over waste (e.g., closing a landfill, or closing a surface impoundment or waste pile as a landfill, or similar action) requires a cover designed and constructed to: N Provided long-term minimization migration of liquids through the capping area; N function with minimum maintenance: N Promote drainage and minimize erosion or abrasion of the cover;	RCRA hazardous waste placed at site after November 19, 1980, or movement of hazardous waste from one unit, area of contamination, or location into another unit or area of contamination will make requirements applicable. Capping without such movement will not make requirements applicable, but technical requirements are likely to be relevant and appropriate.	40 CFR 264.258(b) 40 CFR 264.310(a)	R&A	Capping of waste in place using RCRA technical requirements R&A

TABLE 3-3 (continued)
SCREENING OF PROBABLE ACTION SPECIFIC ARARS
FOR REMEDIAL ACTIONS AT THE 881 HILLSIDE AREA

Action	Requirement	Prerequisite	Citation	ARAR	Comments
Capping (continued)	N Accommodate settling and subsidence so that the cover's integrity is maintained; and				
	N Have a permeablitity less than or equal to the permeability of any bottom liner system or natural sub-soils prevent				
	N Eliminate free liquids, stabilize wastes before capping (surface impoundments).		40 CFR 264.22B(a)		
	N Restrict post-closure use of property as necessary to prevent damage to the cover.		40 CFR 264.117(c)		
	N Present run-on and run-off from damaging cover.		40 CFR 264.228(b) 40 CFR 264.310(b)		
	N Protect and maintain surveyed benchmarks used to locate waste cells and (landfills, waste piles).		40 CFR 264.310(b)		
	N Eliminate free liquids by removal or solidification.		40 CFR 264.228 (a)(2)		
	N Stabilization of remaining waste and waste residues to support cover.		40 CFR 264.228 (a)(2) and 40 CFR 264.258(b)		

TABLE 3-3 (continued)
SCREENING OF PROBABLE ACTION SPECIFIC ARARS
FOR REMEDIAL ACTIONS AT THE 881 HILLSIDE AREA

Action	Requirement	Prerequisite	Citation	ARAR	Comments
Capping (continued)	Installation of final cover to provide long-term minimization of infiltration		40 CFR 264.310		
	Post-closure care and ground-water monitoring		40 CFR 264.310		
Clean Closure (Removal	General performance standard requires minimization of need for further maintenance and control; minimization or elimination of post-closure escape of hazardous waste, hazardous constituents, leachate, contaminated run-off, or hazardous waste decomposition products. Disposal or decontamination of equipment, structures, and soils	RCRA hazardous waste (listed or character-istic) placed at site after November 19, 1980, or movement of hazardous waste from one unit, area of contamination, or location into another unit or area of contamination. Not applicable to material undisturbed since November 19, 1980	40 CFR 264.111	R&A	Applicable to soil excavation for offsite disposal.
		May apply to surface impoundment; contaminated soil, including soil from dredging or soil disturbed in the course of drilling or excavation, and returned to land	40 CFR 264.111		
	Removal or decontamination of all waste residues, contaminated containment system components (e.g. liners, dikes), contaminated subsoils, and structures and equipment contaminated with waste and leachate, and management of them as hazardous waste.		40 CFR 264.228(a)(1) and 40 CFR 264.258		
	Meet health based levels at unit		40 CFR 244.11		

TABLE 3-3 (continued)
SCREENING OF PROBABLE ACTION SPECIFIC ARARS
FOR REMEDIAL ACTIONS AT THE 881 HILLSIDE AREA

Action	Requirement	Prerequisite	Citation	ARAR	Comments
Excavation/ Consolidation	Area from which materials are excavated may required cleanup to levels establishing by closure requirements	Movement of hazardous waste(listed or characteristic) from one unit or area of contamination into another. Consolidation with a unit or area of contamination does not trigger applicability.	See Clean Closure	R&A	RCRA requirements for clean closure are R&A to remedial action involving soil excavation.
	Consolidation in storage piles/storage tanks will trigger storage requirements.			R&A	RCRA requirements for storage in waste piles or tanks are relevant and appropriate for interim storage of excavated soil destined for consolidation or offisite disposal.
	Placement on or in land outside unit boundary or area of contamination will trigger land disposal requirements and restrictions.		40 CFR 268 (Subpart D)	R&A	Soil excavation during installation of french drains in subject to land disposal restrictions for solvent containing waste. Requirements are are applicable for RCRA hazardous waste; R&A if not RCRA hazardous waste.
Ground-Water Diversion	Excavation of soil for construction of slurry well may trigger cleanup or land disposal restrictions.	RCRA hazardous waste placed at site after November 19, 1980, or movement hazardous waste from one unit, area of contamination, or location into another unit or area of contamination	See Excavation/ Consolidation	R&A	See Excavation/Consolidation
Treatment or Storage in Tanks	Tanks must have sufficient shell strength (thickness), and, for closed tanks, pressure controls, to assure that they do not collapse or rupture.	RCRA hazardous waste (listed or characteristic), held for temporary period before treatment, disposal, or storage elsewhere, (40 CFR 264.10) in a tank.	40 CFR 264.190	R&A	Relevant and Appropriate for treatment and storage tanks used in treating contaminated groundwater
	Waste must not be incompatible with the tank material unless the tank is protected by a liner or by other means.		40 CFR 264.191		

TABLE 3-3 (continued)
SCREENING OF PROBABLE ACTION SPECIFIC ARARS
FOR REMEDIAL ACTIONS AT THE 881 HILLSIDE AREA

Action	Requirement	Prerequisite	Citation	ARAR	Comments
Treatment or Storage in Tanks (continued)	New tanks or components must be provided with secondary containment.		40 CFR 264.193		
	Tanks must be provided with controls to prevent overfilling, and sufficient freeboard maintained in open tanks to prevent over topping by wave action or precipitation.		40 CFR 264.194		
	Inspect following: overfilling control, control equipment, monitoring data, waste level (for uncovered tanks), tanks condition, above-ground portions of tanks, (to assess their structural integrity) and the area surrounding the tank (to identify signs of leakage).		40 CFR 264.195		
	Repair any corrosion, crack, or leak.		40 CFR 264.196		
	At closure, remove all hazardous waste and hazardous residues from tanks, discharge control equipment, and discharge confinement structures.		40 CFR 264.197		
	Store ignitable and reactive waste so as to prevent the waste from igniting or reacting. Ignitable or reactive wates in covered tanks must comply with buffer zone requirements in “Flammable and Combustible Liquids Code,” Tables 2-1 through 2-6 (National fire Protection Association, 1976 or 1981).		40 CFR 264.198		

TABLE 3-3 (continued)
SCREENING OF PROBABLE ACTION SPECIFIC ARARS
FOR REMEDIAL ACTIONS AT THE 881 HILLSIDE AREA

Action	Requirement	Prerequisite	Citation	ARAR	Comments
Container Storage (On-Site)	Containers of hazardous waste must be:	RCRA hazardous waste(listed or characteristic) held for a temporary period before treatment, disposal, or		R&A	RCRA containers storage requirements are R&A
	N Maintained in good condition	storage elsewhere, in a container (i.e., any portable device in which	40 CFR 264.171		
	N Compatible with hazardous waste to be stored; and	a material is stored, transported, disposed of, or handled) (40 CFR 264.10)	40 CFR 264.172		
	N Closed during storage (except to add or remove waste).		40 CFR 264.173		
	Inspect container storage areas weekly for determination		40 CFR264.174		
	Place containers on a sloped, crack-free base, and protect from contact with accumulated liquid. Provide containment system with a capacity of 10% of the volume of containers of free liquids. Remove spilled or leaked waste in a timely manner to prevent overflow of the containment system.		40 CFR 264.175		
	Keep containers of ignitable or reactive waste at least 50 feet from the facility's property line.		40 CFR 264.176		
	Keep incompatible materials separate. Separate incompatible materials stored near each other by a dike or other barrier.		40 CFR 264.177		

TABLE 3-3 (continued)
SCREENING OF PROBABLE ACTION SPECIFIC ARARS
FOR REMEDIAL ACTIONS AT THE 881 HILLSIDE AREA

Action	Requirement	Prerequisite	Citation	ARAR	Comments
Container Storage (On-Site) (continued)	At closure, remove all hazardous waste and residues from the containment system, and decontaminate or remove all containers, liners.		40 CFR 264.178		
Off-Site Treatment Storage or Disposal	In case of any removal or remedial action involving the transfer of hazardous substance or pollutant or contaminant offsite, such hazardous substance or pollutant or contaminant shall only be transferred to a facility which is operating in compliance with section 3004 and 3005 of the Solid Waste Disposal Act (or where applicable, in compliance with the toxic Substances Control Act or other applicable Federal law) and all applicable State requirements. Such substance or pollutant or contaminant may be transferred to a land disposal facility only if the President determines that both of the following requirements are met:		SARA section 121 (d)(2)(c)	Applicable	Applicable to the offsite treatment, storage, or disposal of waste generated during onsite remedial action.

TABLE 3-3 (continued)
SCREENING OF PROBABLE ACTION SPECIFIC ARARS
FOR REMEDIAL ACTIONS AT THE 881 HILLSIDE AREA

Action	Requirement	Prerequisite	Citation	ARARS	Comments
Off-Site Treatment Storage or Disposal (continued)	N The unit to which the hazardous substances or pollutant or contaminant is transferred is not releasing any hazardous waste, or constituent thereof, into the groundwater or surface water or soil . N All such releases from other units at the facility are being controlled by a corrective action program approved by the Administrator under subtitle C of the Solid Waste Disposal Act.				
Hazardous Waste Operation	As mandated by SARA, OSHA has promulgated regulations that required employers to develop and implement a written safety/ health program designed to regulate employee safety and health during hazardous waste operations. The safety and health program must include: N Organizational structure- Establish and implement chain of command and specify the responsibilities of key personnel.	Regulations apply to hazardous substance response operations under CERCLA; Corrective cleanup under RCRA; hazardous waste operations that have been designated for cleanup by state or local authorities; most operations involving the treatment, storage or disposal of hazardous wastes regulated under RCRA; and emergency response operations for releases or threats of releases of hazardous substances.	29 CFR Part 1910.120		

TABLE 3-3 (continued)
SCREENING OF PROBABLE ACTION SPECIFIC ARARS
FOR REMEDIAL ACTIONS AT THE 881 HILLSIDE AREA

Action	Requirement	Prerequisite	Citation	ARARS	Comments
Hazardous Waste Operation (continued)	N Comprehensive Work Plan - Identify anticipated activities, define work tasks, establish personnel requirements, and provide for the implementation of medical surveillance and training programs as required by these regulations.				
	N Site Specific Health and Safety Plans A site health and safety plan must be prepared for each phase of operation that addresses key personnel; hazard recognition; training assignments; personnel protective equipment to be used; medical surveillance; frequency and type of monitoring, including air and personnel monitoring; site control measure; decontamination procedures; emergency contingency plans				
	General Requirements of these regulation:				
	N Site characterization and analysis - Identify site hazards to determine levels of personnel protection		29 CFR 1910.120(c)	Applicable	Site hazardous have been characterized through the RI/FS process.
	N Site Control - Implement site control zones to minimize employee exposure to hazardous substances.		29 CFR 1910.120(c)	Applicable	Site control zones will be defined in site-specific health and safety plans.

TABLE 3-3 (continued)
SCREENING OF PROBABLE ACTION SPECIFIC ARARS
FOR REMEDIAL ACTIONS AT THE 881 HILLSIDE AREA

Action	Requirement	Prerequisite	Citation	ARARS	Comments
Hazardous Waste Operation (continued)	N Training - Initial training and refresher training required before employee is permitted to engaged in site activities.		29 CFR 1910.120(e)	Applicable	Personnel engaged in remedial actions at the 881 Hillside area are required to meet minimum training requirements as specified in the OSHA standard
	N Medical Surveillance Employers must implement medical surveillance for employees potentially exposed to hazardous substances.		29 CFR 1910.120(f)	Applicable	
	N Engineering Controls, work practices and personnel protective equipment One or all of these shall be used to minimize exposure of employees to hazardous substances and health hazards.		29 CFR 1910.120(g)	Applicable	
	N Monitoring - Monitoring of exposure of employees to hazardous substances is required to determine the efficacy of protective equipment and engineering controls.		29 CFR 1910.120(h)	Applicable	
	N Informational Program Employees, contractors, and subcontractors shall be informed of the degree and nature of hazardous associated with site activities.		29 CFR 1910.120(i)	Applicable	All personnel involved in site activities will be required to read and comply with the site safety plan. The safety plan will outline the anticipated physical and chemical hazards.

TABLE 3-3 (continued)
SCREENING OF PROBABLE ACTION SPECIFIC ARARS
FOR REMEDIAL ACTIONS AT THE 881 HILLSIDE AREA

Action	Requirement	Prerequisite	Citation	ARARS	Comments
Hazardous Waste Operation (continued)	N Material Handling Hazardous substances, contaminated solids, liquids or other residues shall be handled, transported, and labeled according to subsection (j) of the OSHA standard		29 CFR 1910.120(j)	Applicable	D. O.T. Specification containers will be used to handle, store, or transport.
	N Decontamination - Decontamination procedures outlined in subsection (k) of the standard must be compiled with during onsite remedial action.		29 CFR 1910.120(k)	Applicable	Decontamination procedures will be presented in the site health and safety plan.
	N Emergency Response Contingency plans must be developed as part of site health and safety planning		29 CFR 1910.120 (l)	Applicable	Contingency plans will developed for the site health and safety plan.
	N Illumination/Sanitation Minimum illumination and sanitation facilities must be provided for employees involved in hazardous waste operations		29 CFR 1910.120(m)(n)	Applicable	
	N Site Excavation Site excavations must be stored or sloped to prevent collapse.		29 CFR 1910.120/1926	Applicable	
	N Contractors and Subcontractors Employees must inform contractors or subcontractors of potential hazards associated with site activities		29 CFR 1910.120	Applicable	

SECTION 4.0

IDENTIFICATION AND SCREENING OF POTENTIAL IRA OPTIONS

4.1 SUMMARY OF THE ES TECHNOLOGY AND REMEDIAL ALTERNATIVE SCREENING PROCESS

The 881 Hillside Area FS Report (Rockwell International, 1988b) was prepared according to the EPA Feasibility Study Guidance (EPA, 1985) available at the time. The initial screening process eliminated infeasible, inappropriate or environmentally unacceptable technologies. The following technologies were retained after screening:

1. No remedial action - monitoring only (not considered here)
2. Off-site RCRA landfill
3. Well arrays
4. Subsurface drains
5. Soil-bentonite slurry wall
6. Multi-layer cap
7. Grading and vegetation
8. Surface water diversion
9. In situ immobilization (grouting)
10. Soil flushing
11. UV/Peroxide water treatment
12. Air stripping water treatment
13. Activated carbon adsorption water treatment
14. Discharge to surface-water
15. Re-injection to ground-water

Technologies were then combined that are complementary and interrelated, to form alternatives that address the site issues and control contaminant pathways. The three water

treatment technologies were subjected to a more detailed evaluation to determine the most cost-effective, reliable treatment system for inclusion with the alternatives requiring water treatment. Provisions of the Superfund Amendments and Reauthorization Act of 1986 (SARA) also require that alternatives be developed that consider:

- Elimination of long term site management;
- Reduction of waste toxicity, mobility, or volume;
- Waste containment with little or no treatment ;
- Use of innovative technologies.

The developed alternatives are as follows:

1. Collection of ground water using a line of downgradient wells and a source well at SWMU 119.1, collection of footing drain flow, and reinjection of treated water downgradient of the 881 Hillside Area in the Valley Fill Alluvium of the Woman Creek drainage.

2. Collection of ground water using a french drain and a source well at SWMU 119.1, collection of footing drain flow, and reinjection of treated water downgradient of the 881 Hillside Area in the Valley Fill Alluvium of the Woman Creek drainage.

3. Collection of ground water using a french drain and a source well at SWMU 119.1, collection of footing drain flow from, and discharge of treated water to the surface, and in situ treatment of soils using soil flushing.

4. Total encapsulation of source areas using a multi-layer cap and slurry wall with control of gradients by pumping an internal sump (dewatering fluids to be treated at an existing treatment plant).

5. Pump a Source well at SWMU 119.1, collect footing drain flow, and reinjection of treated water downgradient of the 881 Hillside Area in the Valley Fill Alluvium of the Woman Creek drainage.

6. Immobilization of contaminants using a chemical grout.

7. Collection of ground water using a french drain and a source well at SWMU 119.1, collection of footing drain flow, reinjection of treated m-water downgradient of the 881 Hillside in the Valley Fill Alluvium of the Woman Creek drainage, and partial removal of soils to a RCRA-permitted disposal facility.

Three broad considerations, consistent with the National Contingency Plan, were used as the basis for the preliminary screening of developed alternatives:

- Cost - The cost of implementing the remedial action was considered including operating and maintenance costs. An alternative whose cost far exceeds that of others being evaluated without providing significantly greater protection was eliminated.

- Acceptable Engineering Practices - Alternatives which do not provide a proven and reliable means of addressing the problem were eliminated.

- Effectiveness - Alternatives which do not effectively contribute to the protection of public health, welfare, and the environment were eliminated. Alternatives posing significant adverse environmental effects and only limited benefits were also excluded from further consideration.

Of the seven remedial action alternatives developed, four of the alternatives were eliminated because they did not provide adequate protection of public health, welfare, and the environment, or were much more costly without providing significantly greater protection. The 881 Hillside Area Feasibility Study Report (Rockwell International, 1988b) provides the details of the screening process to this point.

The remaining three alternatives from the FS Report were retained for a further detailed evaluation based on additional treatment requirements imposed by the DOE agreement with the State of Colorado in June 1989. This agreement additionally requires the treatment of collected ground-water for removal of inorganic contaminants including radionuclides until the background ground water study is completed at which time the treatment requirement for inorganics and radionuclides will be re-evaluated. In addition, the treated water will be discharged to surface water as opposed to ground-water reinjection, as originally proposed in the FS. The reinjection of treated ground water downgradient of the french drain is deemed not to be necessary because of the interaction between surface-water and alluvial ground-water. The three alternatives remaining are:

1. Collection of ground water using a french drain and a source well, collection of footing drain flow, treatment of collected water in a new treatment plant and discharge to surface water.

2. Total encapsulation of source areas using a multi-layer cap and slurry wall with control of gradients by pumping an internal sump (dewatering fluids to be treated at an existing treatment plant).

3. Pump a source well at SWMU 119.1, collect footing drain flow, treat collected water at a new treatment plant, and discharge to surface water.

The detailed analysis of the three remaining alternatives is presented in this document and is based on the Match 30, 1988 EE/CA Guidance. Each alternative is evaluated individually based on effectiveness, implementablity, and cost.

4.2 IM/IRA PLAN SCREENING PROCESS

4.2.1 Effectiveness

The criteria for evaluation of effectiveness of removal alternatives includes protectiveness and use of alternatives to land disposal. Protectiveness includes protection of the community and workers during the removal action; threat reduction (mitigation of identified threats); determination of the length of time until protection is achieved; compliance with chemical- and location-specific ARARs; compliance with criteria, advisories and guidances; description of potential exposure to residuals remaining on-site; and long-term reliability for providing continued production. The effectiveness criteria also includes use of alternatives to land disposal, thus promoting utilization of treatment or recycling instead of land disposal.

4.2.2 Implementability

The criteria for evaluation of implementability of removal alternatives includes technical feasibility, availability, and administrative feasibility. Technical feasibility includes the ability to construct the technology and to maintain its operation; compliance with action-specific ARARs; ability to meet process efficiencies or performance goals; demonstrated performance; evaluation of impact of environmental conditions; and compliance with the SARA requirement that removal actions should contribute to the efficient performance of long-term remedial action to the extent practicable. Availability includes the availability of necessary equipment, materials and personnel; availability of adequate off-site treatment. storage, and disposal capacity, if appropriate; and description of post-removal site controls which will be required at the completion of the action. Administrative feasibility includes the likelihood of public acceptance of the alternative, including state and local concern; coordination of activities with other agencies; and ability to obtain any necessary approvals or permits.

4.2.3 Cost

The criteria for evaluation of cost of removal alternatives includes total cost and statutory limits. Total cost includes direct capital costs, indirect capital costs, and any post-removal site control costs. Since the IRA at the 881 Hillside Area is not an EPA-financed removal action, the $2 million statutory cost limit does not apply.

4.3 GROUND-WATER TREATMENT TECHNOLOGIES EVALUATION

The ground-water treatment technologies that were selected for detailed evaluation include carbon adsorption, UV/peroxide (chemical oxidation), and air stripping for organic compounds, and ion exchange, electrodialysis, and reverse osmosis for inorganic compounds. The specific treatment systems listed are provided as examples of systems that can provide the level of treatment needed to meet chemical-specific ARARs for the organic and inorganic contaminants of concern. It is recognized that many companies provide similar treatment systems, and the system ultimately selected for installation will be required to provide the same level of efficiency as that specified here.

The treatment system selected must be capable of treating 30 gpm of contaminated ground water with influent characteristics as shown in Table 4- 1. The effluent quality must meet the chemical-specific ARARs.

The location- and action-specific ARARs are similar for each of the treatment technologies, and are discussed in Section 3. Only air stripping has unique action specific requirements because it is subject to the Colorado Department of Health Air Quality regulations for the air emissions.

TABLE 4-1

BASIS FOR DESIGN OF 881 HILLSIDE TREATMENT PLANT

ORGANICS	UNITS	INFLUENT [a] CONCENTRATION	TREATMENT REQUIREMENTS
Methylene Chloride	ug/l	<5[b]	5
Acetone	ug/l	<10[b]	50
Carbon Disulfide	ug/l	<5[b]	5
1,1 Dichloroethene	ug/l	622	7
1,1 Dichlorocthane	ug/l	11	5
1,2 Dichloroethane	ug/l	2.0	5
1,1,1 Trichloroethane	ug/1	945	200
Carbon Tetrachloride	ug/l	65	5
Trichloroethene	ug/1	845	5
1.1.2 Trichloroethane	ug/l	<5[b]	5
Tetrachloroethene	ug/l	311	5
Toluene	ug/l	<5[b]	2000

METALS	UNITS	INFLUENT [a] CONCENTRATIONS	TREATMENT REQUIREMENTS
Aluminum	mg/1	0.0703	5
Antimony	mg/1	0.0264	.06
Arsenic	mg/1	0.0049	.05
Barium	mg/1	0.1076	1.0
Beryllium	mg/1	0.0022	0.1
Cadmium	mg/1	0.0021	0.01
Cesium	mg/1	0.1515	NS
Chromium	mg/1	0.0071	0.05
Copper	mg/1	0.0355	0.2
Iron	mg/1	0.0410	0.3
Lead	mg/1	0.0026	0.05
Lithium	mg/l	0.0450	2.5
Manganese	mg/l	0.0738	0.05
Mercury	mg/l	0.1290	0.002
Molybdenum	mg/l	0.0085	0.1
Nickel	mg/l	0.0683	0.2
Selenium	mg/1	0.1743	0.01
Silver	mg/1	0.0145	0.05
Strontium	mg/1	0.8287	NS
Thallium	mg/l	0.0072	0.01
Vanadium	mg/1	0.0391	0.1
Zinc	mg/l	0.1883	2.0

TABLE 4-1
(continued)

BASIS FOR DESIGN OF
891 HILLSIDE TREATMENT PLANT

MAJOR IONS	UNITS	INFLUENT [a] CONCENTRATION	TREATMENT REQUIREMENTS
Calcium	mg/l	109.7	NS
Magnesium	mg/l	26.1	NS
Potassium	mg/1	2.7	NS
Sodium	mg/1	87.4	NS
Total Dissolved Solids	mg/1	718	400
Chloride	mg/1	128	250
Nitrite & Nitrate	mg/1	8.29	10
Sulfate	mg/1	122	250
Bicarbonate As ($CaCO_3$)	mg/1	274	NS

RADIONUCLIDES	UNITS	INFLUENT [a] CONCENTRATION	TREATMENT REQUIREMENTS
Gross Alpha	pCi/1	21.5	15
Gross Beta	pCi/1	17.8	50
Uranium (Total)	pCi/1	15.4	40
Strontium (89, 90)	pCi/1	< 1.0[b]	8
Plutonium (239, 240)	pCi/1	<0.0 1	15
Americum (241)	pCi/1	<0.01	4
Tritium	pCi/1	<400[b]	20,000

[a] Based on a flow weighted average of the 881 Building footing drain flow (5 gpm) and alluvial groundwater at the 881 Hillside that would be collected in the french drain (2 gpm). Averages computed from the 1987 and 1988 data base, except organics. Organic compound concentrations determined from first and second quarter .1989 data.

[b] Detectable concentrations in some wells; however, blend should have non-detectable concentrations.

NS No standard.

4.3.1. Activated Carbon Adsorption (Organic Contaminant Removal)

4.3.1.1 Description

For the granular activated carbon (GAC) adsorption system, the ground water will be pumped through two GAC columns in series operated in downflow fixed-bed mode (Figure 4-1). A second set of GAC columns for stand-by operation are in parallel to the first set. Each carbon column is 44 inches in diameter and 89 inches high, and contains 1,800 pounds of carbon. Based on a peak flow rate of 30 gpm, the hydraulic loading to each column will be approximately 1.4 gpm/ft^2. Contact time for each column will be approximately 25 minutes. To completely utilize the carbon, columns are arranged in series allowing the lead column to become fully exhausted before regeneration while the second (polishing) column ensures effluent quality. Periodic samples will be taken f rom the effluent of each unit, and when the lead unit effluent exceeds chemical-specific ARARs, the lead carbon column will be removed, the polishing (second) column will become the lead column, and a stock carbon column carbon will be put in service as the polishing unit. The carbon column with the exhausted carbon will then be shipped to an off-site location for regeneration.

4.3.1.2 Effectiveness

GAC adsorption systems have been shown to remove VOCs from contaminated ground water to levels that comply with the chemical-specific ARARs. The EPA (*Federal Register*, Vol. 52, No. 130, page 25698) has designated carbon adsorption a "Best Available Technology" for the removal of seven specific volatile organic compounds (including TCE and 1,1,1-TCA) from drinking water. The GAC adsorption system that is proposed here for the treatment of the 881 Hillside ground water will be in continuous operation until the concentrations of VOCs in the ground water decrease to chemical-specific ARAR concentrations, at which time further treatment will be unnecessary. The probability of equipment failure will be minimized in this system because of the redundancy of having two (2) parallel on-line units, each of which could treat the design flow. Two stock units on site add to the system reliability.

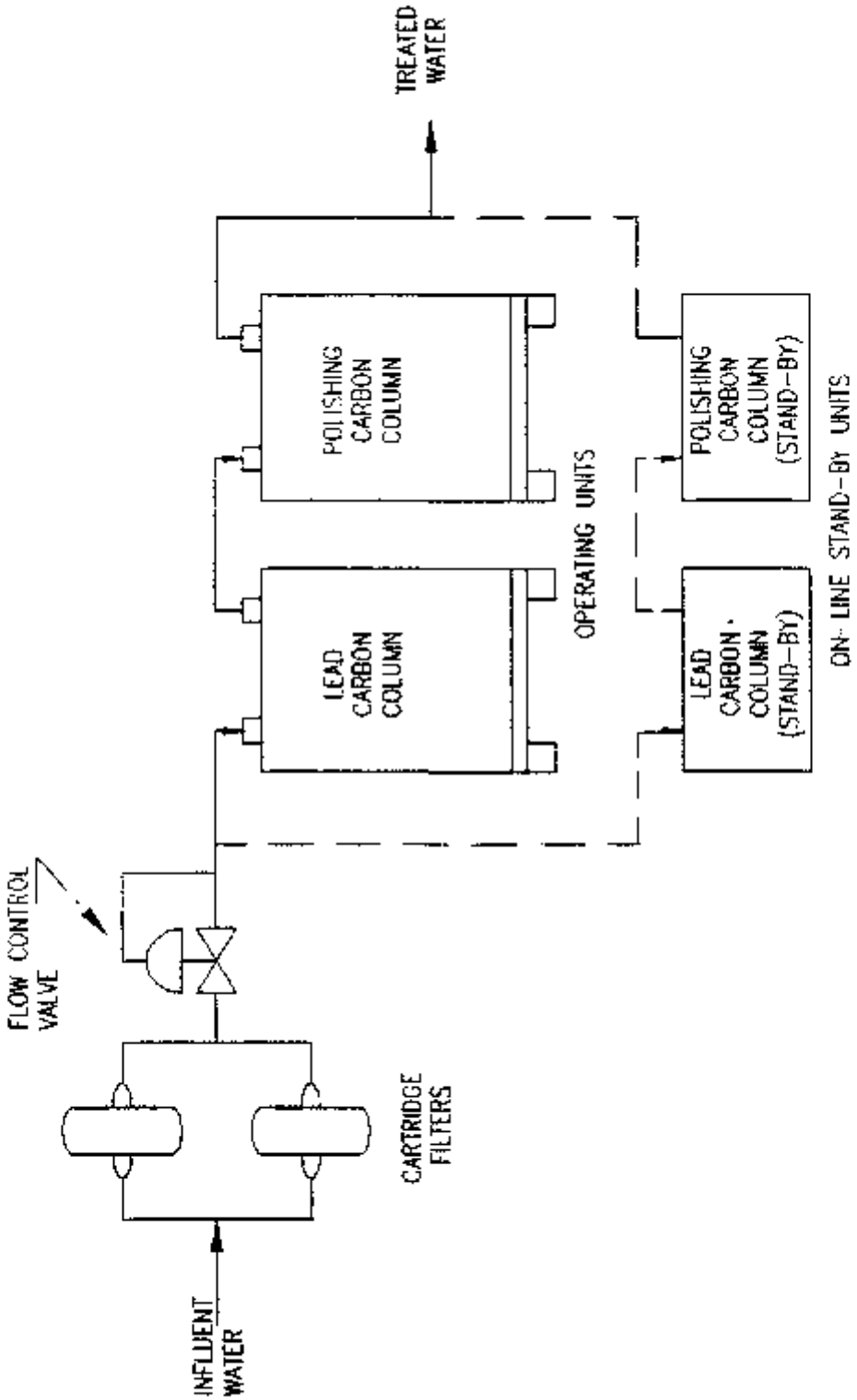

FIGURE 4-1
CARBON ADSORPTION TREATMENT UNIT

R37013.PJ-082889

Appropriate safety measures required when moving and installing large equipment will be complied with during installation. The operation and maintenance of the system will be by personnel who are trained in the handling of hazardous and radioactive wastes. Because carbon will remove oxygen from the air, any time personnel are working in confined areas where oxygen may be limited, special care must be taken to ensure that an adequate air supply is available.

The operators of the GAC system will not be exposed to VOCs-laden carbon because the use of the containerized and transportable carbon contractors allows removal and replacement of the exhausted carbon at a remote carbon reactivation site. Carbon will not be handled at the site. Transporting the entire exhausted carbon column to the regeneration facility ensures operators are protected from the carbon, and the operators need only follow routine safety procedures when handling heavy equipment.

The exhausted carbon is generally regenerated through a thermal treatment process which strips the volatile organics from the carbon. The organics are subsequently destroyed via incineration. During this regeneration process, a small quantity of ash may be generated which requires disposal at a landfill. Thus, this process can be considered an alternative to land disposal since the carbon is continuously recycled. However, if the spent carbon was determined to be a mixed waste, then it would require land disposal at the Nevada Test Site.

GAC adsorption treatment in scaled, fixed-bed contractor vessels does not produce any waste streams or vapor emissions. The safety of nearby communities should not be adversely affected and the risk of harm to the environment should not be increased. This treatment process will effectively remove organic contaminants from the ground water. Treated water will be monitored at the effluent and also at an intermediate point in the system to ensure contaminants are below the chemical-specific ARAR concentrations before being released to the environment during implementation of the process.

4.3.1.3 Implementability

GAC adsorption is a proven technology for removing (VOC.) from ground water. Testing performed by Calgon demonstrated that activated carbon can remove VOCs to m second carbon unit connected in series with the lead unit wo will ensure removal of the VOCs to these levels. The carbon columns readily installed in the treatment building. The system should be ready to operate a capacity, after initial adjustments and test runs, within a day.

It is estimated that approximately 2 man-hours of operator time will be needed daily, primarily for start up, shutdown, and system monitoring. Periodic change-out of the carbon units and maintenance of the equipment will require approximately 16 hours per month, thus the total labor requirement will be 76 hours/month.

4.3.1.4 Costs

Results of the treatability study indicate the carbon usage rate will be 3.1 pounds per 1,000 gallons of ground water, based on breakthrough of methylene chloride (Rockwell International, 1988b). At a cost of approximately $1.15 per pound for regenerated carbon, the annual costs are estimated to be $18,600 for carbon (based on an average flow rate of 10 gpm). The cost of shipping contaminated carbon (as a manifested hazardous waste) for regeneration is estimated to be $2,500 and $500 for receiving regenerated carbon, for a total of $3,000 per exchange. If the spent carbon requires disposal at the Nevada Test Site as a mixed waste, this cost could change substantially. Annual operation and maintenance costs are based on 76 hours per month at a labor rate of $61/hour.

Using the preceding information, the estimated capital costs for installing a carbon adsorption system and the estimated annual operating costs are shown in Table 4-2. Total cost

TABLE 4-2

ESTIMATED COSTS FOR CARBON ADSORPTION SYSTEM

ITEM	CAPITAL COST (Dollars)	ANNUAL COST (Dollars)
Building [1]	162,500	
Carbon Treatment System	79,000	
Operating Costs [2]		
Carbon Purchases[3]		18,600
Shipping[4]		27,000
Powers[5]		600
Operation and Maintenance [6]		55,600
TOTAL	$241,500	$101,800

[1] Volatile organic treatment system assigned 1/2 of building cost
[2] Based on a flowrate of 30 gpm, 8 hr/d
[3] 9 loads/yr @ $1.15/lb
[4] 9 units/yr @ $3,000 each
[5] 4 HP, 8 hr/d @ $0.07/k Wh
[6] 76 hr/month @ $61/hr

PRESENT WORTH:

Present Worth Factor (PWF) = 9.427 (for annual operating costs)

$101.800/year x 9.427=	$ 960,000
1989 Capital Cost =	$ 241,500
	$1,201,500

(Present Worth) of the GAS adsorption system based on 10 percent simple interest, a 30-year duration of operation, and no salvage value, is estimated to be about $1,201,500.

4.3.2 Ultraviolet (UV) Peroxide Oxidation (Organic Contaminant Removal)

4.3.2.1 Description

The UV/peroxide treatment unit as designed by one manufacturer, consists of an 80-gallon stainless-steel oxidation chamber, which provides for a maximum ground-water retention time of 2.66 minutes at a peak system flowrate of 30 gpm (Figure 4-2).

The oxidation chamber contains 4 medium pressure UV lamps, which are mounted horizontally in quartz sheaths. A hydrogen peroxide feed system is used to inject approximately 50 mg/l (per ppm of organic contaminants) of a 50 percent H_20_2 solution into the ground-water feed line. The ground-water/peroxide mixture then passes through an in-line static mixer before entering the bottom of the oxidation chamber. The ground water then flows through the reaction chamber, passing the UV lamps, before it exits the top of the oxidation chamber.

4.3.2.2 Effectiveness

The UV/peroxide system is capable of removing all of the volatile organics from the ground water to levels below the chemical-specific ARARs. Bench- scale studies, using 881 Hillside Area water, were conducted by Peroxidation Systems, Inc. (Rockwell International, 1988b). The bench-scale testing unit provided a dynamic flow simulation of the process to evaluate the parameters necessary to assure treatment effectiveness and unit sizing. Parameters investigated during the testing included hydrogen peroxide (H_20_2) dosage and power requirements, retention time, system pH, and influent/effluent chemical conditions. Alluvial groundwater from monitoring well 9-74 was blended with footing drain water to

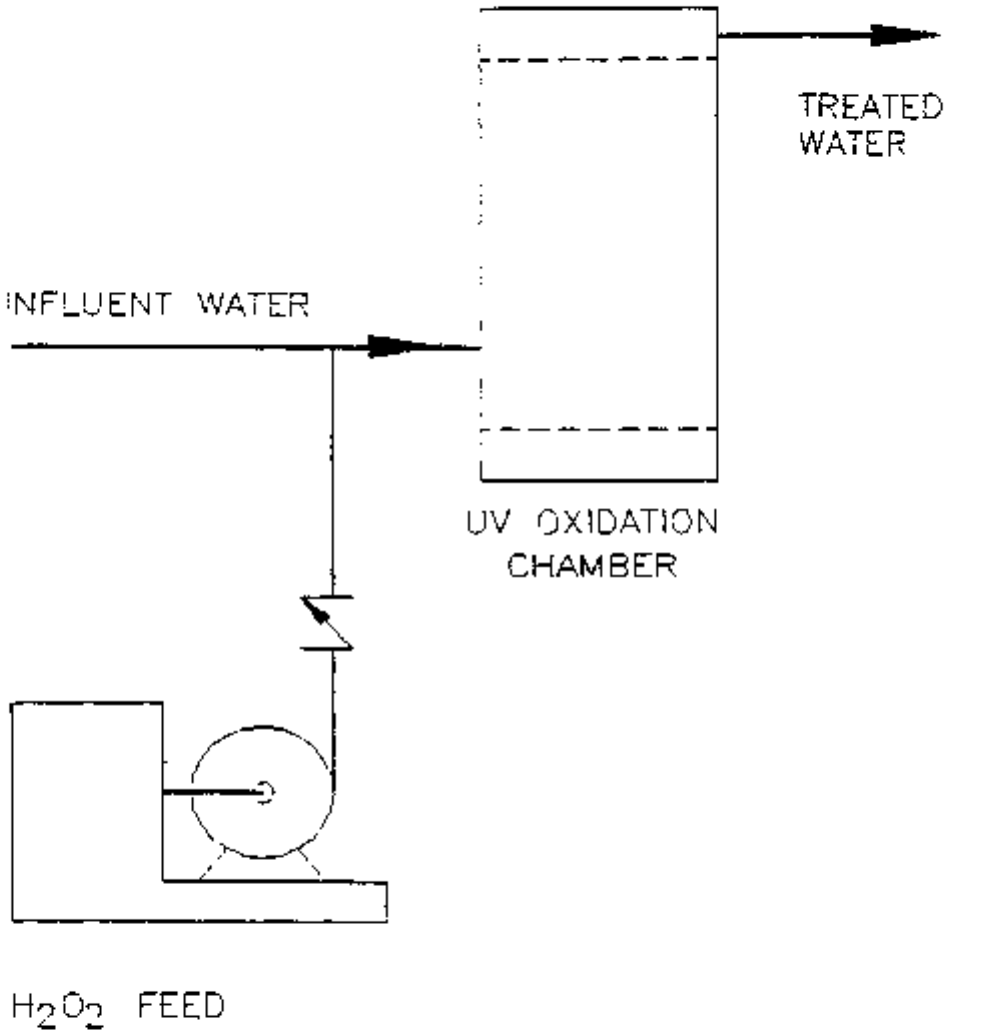

FIGURE 4-2
UV/PEROXIDE SYSTEM

R37002.PJ-082589

simulate the expected influent chemical conditions. Results from this testing provided information on H_2O_2 dosage. However, to establish the reaction rates essential to sizing the treatment unit, an unblended sample was tested. Contaminant concentrations were reduced to non-detectable levels for initial ground-water influent total VOCs concentrations of 1 ppm. These results indicate that the UV/peroxide ground-water treatment process is capable of achieving the effluent criteria f or all of the volatile organics listed in Table 4-1. The volatile organics will be completely oxidized to carbon dioxide, water, and chloride, and no organic degradation products will be produced. The system will remain in operation until the ground water has been fully treated to these levels. The system requires periodic UV lamp replacement and routine maintenance, but is expected to have long-term reliability in terms of operation and performance. The risk of failure of the system at any time is highly unlikely. Since the volatile organics are destroyed in the UV/peroxide system, no wastes are produced which require ultimate disposal. While the presence of ferrous iron can impede the effectiveness of the UV/peroxide treatment system due to the precipitation of ferric iron, the manufacturer has indicated that this will not be a problem at the iron concentrations expected. However, should ferric iron precipitation problems arise, appropriate pretreatment such as aeration will be implemented to correct this problem.

During operation of the UV/peroxide ground-water treatment unit, the use of hydrogen peroxide, a strong oxidizer, will require that operators are aware of this potential hazard. The H_20_2 bulk storage tank will be properly vented to assure no pressure buildup and minimize handling exposure. Existing DOE and Rockwell health and safety guidelines at Rocky Flats regarding operator safety while working with strong oxidizers will be followed. UV lamps operate utilizing high voltage and thus caution must be used when working with the system and during the periodic replacement of the UV lamps.

The safety of nearby communities should not be adversely affected and the risk of harm to the environment should not be increased as this treatment process will effectively destroy ground-water contaminants. Treated water will be monitored to ensure contaminants are within regulatory guidelines before being released to the environment.

4.3.2.3 Implementability

UV/peroxide oxidation is an innovative technology for the complete destruction and detoxification of hazardous organic compounds in aqueous solutions. Although the technology is relatively new and has had limited application in the field, SARA requires EPA to prefer remedial actions that significantly and permanently reduce the toxicity, mobility, or volume of hazardous wastes by employing innovative technologies that result in the destruction or detoxification of the wastes.

Demonstrated performance the UV/peroxide ground-water treatment system has been somewhat limited due to the relatively new development of the process. However. Peroxidation Systems, Inc. has 6 UV/peroxide units currently operational or on-line and ready for operation. One of these units is located at Rocketdyne's Santa Susana facility in California. Pilot scale operations were performed by Peroxidation Systems, Inc., on ground water containing VOCs (TCA, TCE, etc.) at system flow rates of approximately 20-40 gpm. Results from the pilot scale testing were favorable, and a UV/peroxide ground-water treatment unit has been purchased, set-up, and site tested. Another UV/peroxide groundwater treatment system, located locally, was visited and appeared to be a low maintenance, highly effective ground-water treatment unit. This system was treating ground water with TCA concentrations significantly lower than those found at the 881 Hillside (approximately 7 ppb). However, the treatment process had initially and effectively treated ground water with much higher concentrations. Based upon actual bench scale results using 881 Hillside ground water and information received regarding currently operating treatment systems, the innovative UV/peroxide ground-water treatment system appears to be a reliable treatment technology.

Operating and maintenance requirements for the UV/peroxide treatment system arc relatively minor. The system will require approximately 180 kW of power and 6,100 pounds/year of 50 percent H_20_2 solution for normal operation. Routine maintenance of the equipment is required and the UV lamps will require replacement approximately every 3-6

months. Routine system maintenance is estimated to be approximately 16 hours/month. An additional two hours per day will be required for system start up, shutdown, and monitoring. All four system UV lamps can be exchanged in about an hour. The system requires only occasional observation to ensure the system is operating properly, although system alarms will notify operators if a problem does occur.

4.3.2.4 Costs

Estimated costs for the UV/peroxide ground-water treatment unit are shown in Table 4-3. Capital cost for the UV/peroxide ground-water treatment system is approximately $382,500. Operational costs include procurement of hydrogen peroxide (6,100 pounds/year), power utilization (180 kW), labor (76 hours/month), and lamp replacement (every 3-6 months at a cost of $300/lamp). Operational costs are based on a system flow rate of 30 gpm, 8 hours per day. Assuming a 10% interest rate and a 30 year operating life, the present worth of the system is $1,329,500.

4.3.3 Air Stripping with Off-Gas Treatment (Organic Contaminant Removal)

4.3.3.1 Description

During air stripping, VOCs are transferred from the water to a continuously flowing airstream which is in direct contact with the water (Figure 4-3). Influent contaminated ground water will enter the top of a 22-inch diameter, 34-foot air stripping column and subsequently contact clean air supplied through the bottom of the column (column sizes are approximate). Appropriate air-to-water flow rates will be utilized to provide for the optimum (99+%) transfer of the contaminants from the ground water to the air stream. The treated ground water will then be pumped through a 1,800-pound liquid phase carbon treatment polishing unit (identical to the one described in Section 4.3.1). The relative humidity of the air stripper emissions will be reduced by use of a heater, and then passed through a vapor phase carbon

TABLE 4-3

OVERALL COSTS FOR THE UV/PEROXIDE

GROUND-WATER TREATMENT UNIT

ITEM	CAPITAL COST (Dollars)	ANNUAL COST (Dollars)
Building [1]	$162,500	
Treatment Unit & Equipment	220,000	
Operating Costs [2]		
-Hydrogen Peroxide[3]		3,000
-Power[4]		36,800
-Lamp Replacement[5]		5,000
-Operation and Maintenance [6]		55,600
TOTAL: UV/Peroxide	$382,500	$100,400

[1] Volatile organic treatment system assigned 1/2of building cost
[2] Operating costs based upon a flowrate of 30 gpm, 8 hr/d
[3] $0.52/lb x 6100 lb/yr
[4] 180 kW, 8 hr/d @ $0.07/kWh
[5] 4 times/year
[6] 76 hrs/month @ $61/hr

PRESENT WORTH

Present Worth Factor (PWF) = 9.427 (for annual operating costs)

$100.400/year x 9.427 =	$ 947,000
1989 capital cost =	$ 382,500
	$1,329,500

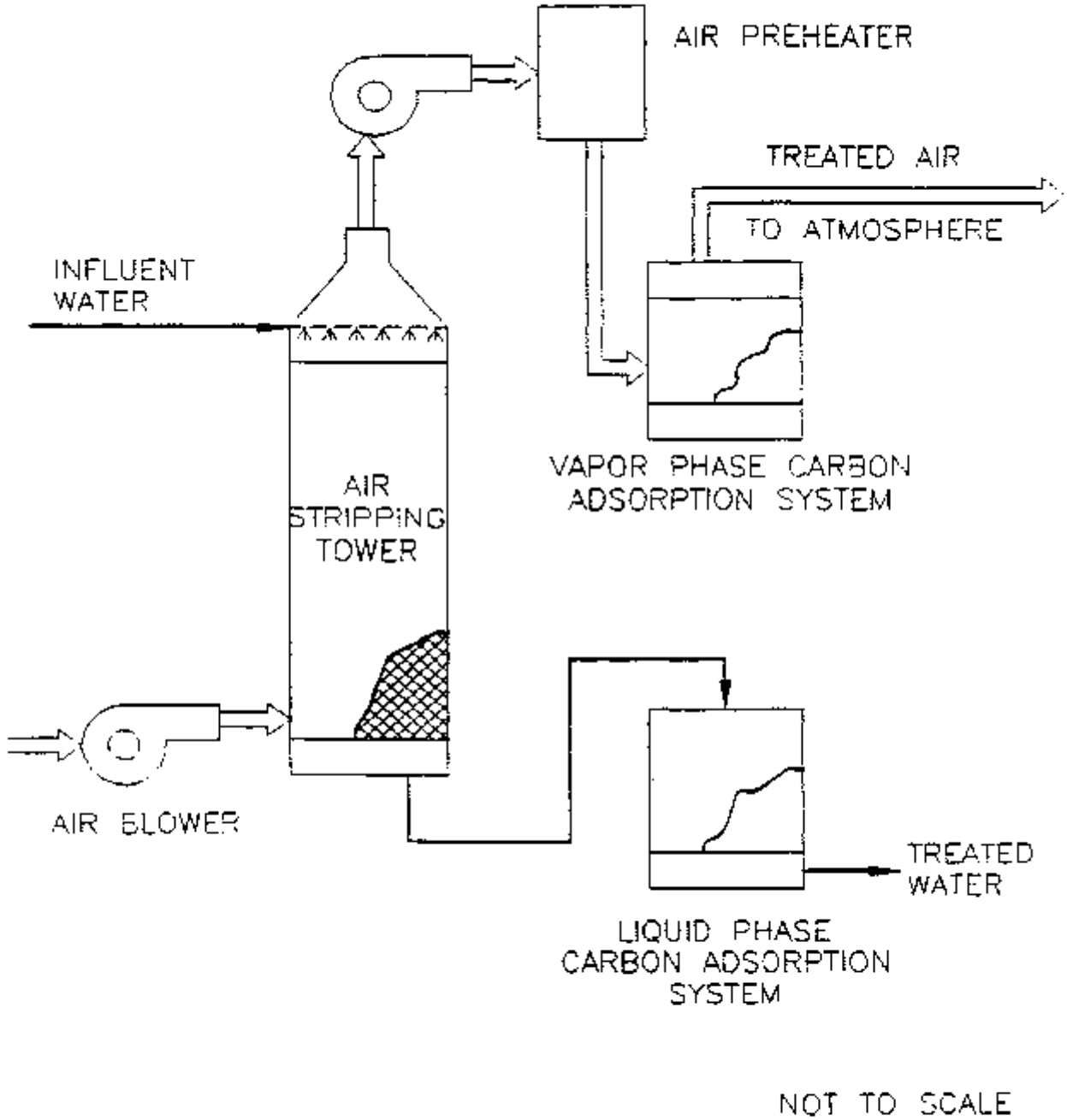

FIGURE 4-3
AIR STRIPPING WITH VAPOR PHASE
AND LIQUID PHASE CARBON ADSORPTION

K37003.PJ-082589

system to remove the organics before being released to the environment. The vapor phase carbon unit will contain 2,000 pounds of carbon.

4.3.3.2 Effectiveness

The use of an air stripper is a highly effective method of removing hazardous volatile organic compounds (VOC.) from ground water. The efficiency of the process is well documented. The Environmental Protection Agency (Federal Register), Vol. 52, No. 130, page 25698) has designated packed tower aeration along with granular activated carbon, as a Best Available Technology (BAT) for the removal of VOC. from drinking water.

An air stripper coupled with liquid and vapor phase carbon adsorption is a proven system that has a dependable record of use. It is expected that this treatment process, with proper maintenance, will provide the desired level of contaminant control until complete remediation of the 981 Hillside Area has been achieved.

The probability of equipment failure will be minimized because the system is oversized for the intended maximum flow of 30 gpm and includes two vapor phase carbon units - one installed and one stock. The stock on site unit adds to the system reliability. All appropriate safety measures required when moving and installing large equipment will be complied with during installation. The operation and maintenance of the system will be performed personnel properly trained in the handling of hazardous and radioactive wastes. Because carbon will remove oxygen from the air, whenever personnel are working in confined areas (i.e., tanks), special care must be taken to ensure that an adequate air supply is available.

The operators of the system will not be exposed to VOC-laden carbon from the vapor phase or liquid phase carbon units because the use of containerized and transportable carbon contractors allows removal and replacement of the exhausted carbon at a remote carbon reactivation site. Carbon will not be handled at the site. Transporting the entire exhausted

carbon column itself to the regeneration facility ensures operators are protected from the carbon itself, and need only follow routine safety procedures when handling heavy equipment.

The exhausted carbon is generally regenerated through a thermal treatment process which strips the volatile organics from the carbon. The organics are subsequently destroyed via incineration. During this regeneration process, a small quantity of ash may be generated which requires disposal at a landfill. Thus, this process can be considered an alternative to land disposal since the carbon is continuously recycled. However, if the spent liquid phase carbon was determined do be a mixed waste, then it would require land disposal at the Nevada Test site. The vapor phase carbon adsorption system will remove the organics from the air stripper emissions before being released to the environment. Therefore, the vapor phase carbon adsorption system will eliminate the impact of any air stripper emissions on the public health. The safety of nearby communities should not be adversely affected and the risk of harm to the environment should not be increased. Treated water and air will be monitored to ensure contaminant levels are within regulatory guidelines before being released to the environment.

4.3.3.3 Implementability

The air stripper will remove greater than 99% of the contaminants in the ground water. Because the air stripper performance is sensitive to changes in flow and contaminant concentrations, a liquid phase carbon adsorption unit is in series with the air stripper to enhance system performance and to ensure that the treated effluent meets chemical-specif ic ARARs for volatile organic compounds. Based on a flow rate of 30 gpm, 8 hours per day, liquid phase carbon usage will be approximately 9 pounds/day and each 1,800-pound carbon unit will require replacement approximately every six months. Vapor phase carbon usage will be approximately 10 pounds/day and each 2,000-pound carbon unit will require replacement approximately every six months.

Operation of the treatment process is relatively simple, requiring occasional cleaning of the air stripping column and replacement of carbon. The air stripper will require cleaning to remove scale buildup on the packing material in order to maintain optimum removal efficiency. Effluent from the cleaning operation will require treatment in the Building 374 Process Waste Treatment System. Transportation and regeneration of the liquid phase and vapor phase carbon units at a remote carbon reactivation site will be required. The air stripping with off-gas treatment system for remediating VOCs contaminated ground water is available commercially and could be implemented quickly. No difficulties are anticipated during the installation and start-up of this treatment system. Replacement of the spent carbon and other maintenance activities are expected to require approximately 16 hours per month, Daily operation of the system will require two hours per day.

4.3.3.4 Costs

Estimated costs for the air stripping ground-water treatment system are shown in Table 4-4. The total capital cost for the system is $257,500. The liquid phase carbon unit is the same unit described in Section 4.3.1. The majority of the operating costs result from the replacement of spent vapor phase and liquid phase carbon. These costs were derived from the same treatability study results and unit pricing presented in Section 4.3.1.4. It should be noted that these operating costs are based on regeneration of the spent carbon as a hazardous waste. If the spent carbon requires disposal at the Nevada Test Site as a mixed waste, these costs could change substantially.

The total present worth cost of the system based on 10% simple interest, a 30 year period of operation, and no salvage is estimated to be approximately $960,000. These costs do not include any capital or operating costs for the Building 374 Process Waste Treatment System associated with the treatment of the air stripper cleaning effluent.

TABLE 4-4

OVERALL COSTS FOR THE AIR STRIPPER GROUND-WATER TREATMENT UNIT

ITEM	CAPITAL COST (Dollars)	ANNUAL COST (Dollars)
Building [1]	$162,500	
Treatment Unit & Equipment		
- Air Stripper Column	25,000	
- Liquid Phase Carbon System	45,000	
- Vapor Phase Carbon System	25,000	
Operating Costs [2]		
- Liquid phase carbon[3]		$ 4,200
- Vapor phase carbon[4]		4,000
- Shipping[5]		12,000
- Power[4]		800
- Operation and Maintenance[7] (76 hr/mo)		55,600
TOTAL	$ 257,500	$ 74,500

[1]Volatile organic treatment system assigned 1/2 of building cost
[2] Operating costs are based upon flowrate of 30 gpm, 8 hr/d.
[3] 2 loads/year @ $1.15/lb
[4] 2 loads/year @ $1.00/lb
[5] 4 units/year @ $3.000 each
[6] 5HP, 8 hr/d @ $0.07/kWh
[7] 76 hr/month @ $61/hr

PRESENT WORTH

Present Worth Factor (PWF) = 9.427 (for annual operating costs)

$74,500/year x 9.427 =	$703,000
1989 capital cost =	$257,000
	$960,500

4.3.4 Ion Exchange Treatment (Inorganic Contaminant Removal)

4.3.4.1 Description

The ion exchange treatment system consists of multiple units staged to remove the inorganic contaminants from the ground-water (Figure 4-4). In the first stage, uranium is removed in a strong base anion unit. Next, heavy metals including strontium and manganese are removed with a weak acid cation unit. This unit also removes the total dissolved solids (TDS) associated with carbonate hardness with subsequent production of carbonic acid. The carbonic acid formed is removed by decarbonation (air stripping). Following decarbonation the flow is split between a two-bed demineralizer for TDS removal and an activated alumina unit for selenium removal. The two-bed demineralizer consists of a strong acid cation exchanger and an anion exchanger arranged in series to further reduce TDS. The treated waters from the demineralizerand activated alumina units will be blended, resulting in a final effluent which will meet all chemical-specific ARARs. A split flow is cost effective as it is unnecessary to completely demineralize the entire flow. The ion exchange and activated alumina resins both require periodic regeneration using HCl or NaOH. Rocky Flats' potable water supply will provide the water for regeneration of all the units. The regeneration wastes would be sent to the Building 374 Process Waste Treatment System for final treatment and disposal.

4.3.4.2 Effectiveness

Ion exchange treatment technology has been proven to remove inorganic contaminants from groundwater to levels that comply with the chemical- specific ARARs. Resins used to adsorb contaminants require regeneration to maintain treatment levels.

All appropriate safety measures required when moving and installing large equipment will be complied with during installation. Use of acids and caustics will require that operators are aware of this potential hazard. The operation of the system will be by personnel that are

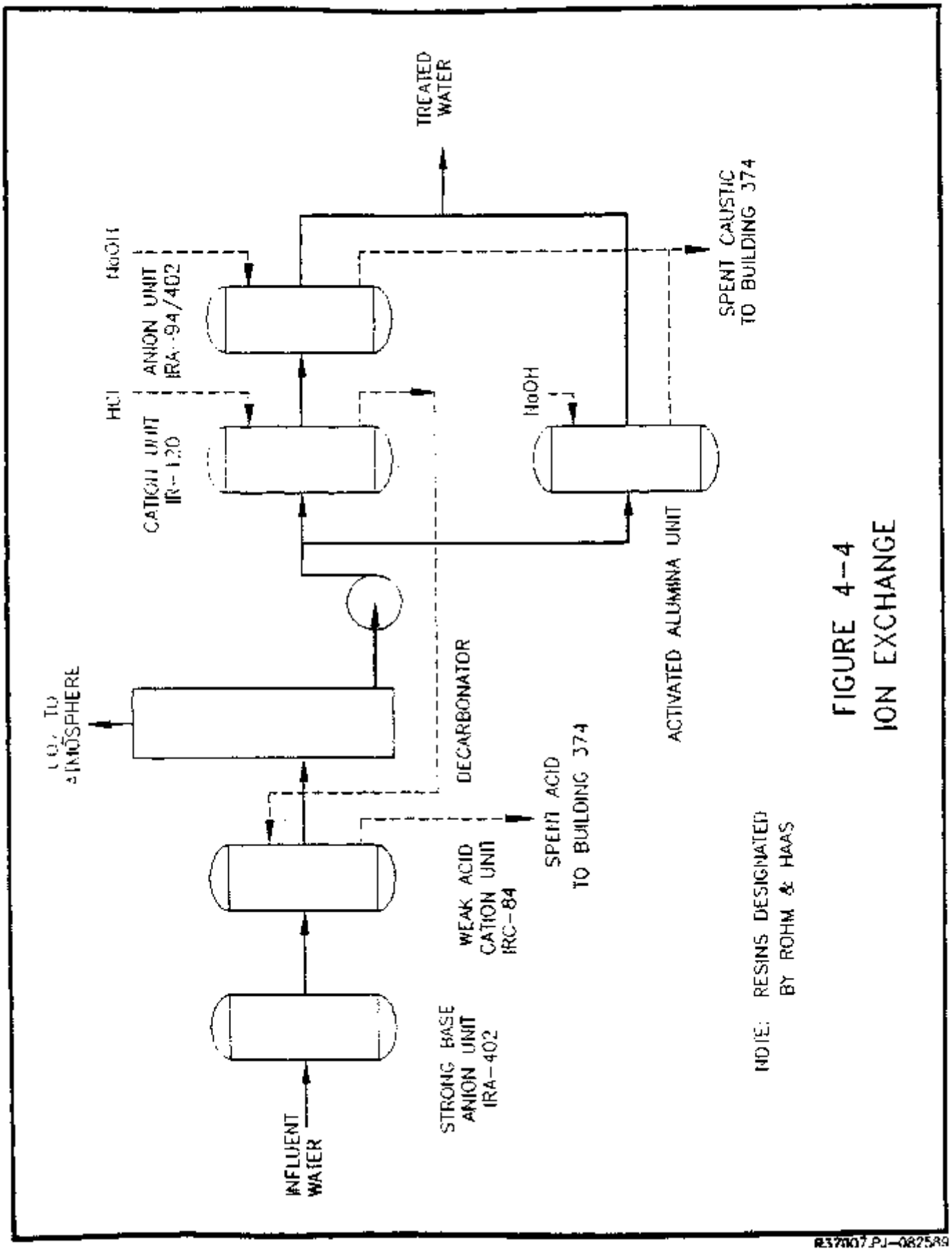

FIGURE 4-4
ION EXCHANGE

R37007.PJ-082589

properly supervised and trained. Treated water will be monitored to ensure that the removal of inorganic contaminants is maintained prior to discharge to the environment.

Over 99% of the uranium passing through the system will be removed in the strong base anion exchange unit containing Rohm and Haas IRA-402 in the chloride form. This unit will selectively remove uranium, while allowing the other metals and major ions to pass through. This is very advantageous because only this unit will be accumulating the radioactivity. This unit will not be regenerated because uranium is not readily desorbed from the resin. Instead, the unit will be shipped off-site and disposed as a low level radioactive waste when its activity reaches a predetermined level. Based on an influent uranium concentration of 16 pCi/l and resin volume of 28 f t^3, this unit could be run for more than 30 years without exhausting the resin.

The second exchange unit is a weakly acidic cation exchanger operated in the hydrogen form. The use of a weakly acidic resin has several advantages for this application, including high regeneration efficiency, high operating capacity for carbonate hardness, and a strong affinity for heavy metals. Rohm & Haas IRC-84 is the resin selected f or its ability to remove all heavy metals of interest. In addition, the hardness associated with bicarbonate alkalinity is transformed by the exchange of hydrogen ions into carbonic acid which is removed in a decarbonator where carbon dioxide is vented to the atmosphere.

Reduction of dissolved solids is effected by a two-bed demineralizer designed to work in conjunction with the weak acid cation exchanger and decarbonator. Rohm & Haas IR-120 is the resin of choice for the strong acid cation resin exchange. The anion portion of the twobed demineralizer will be composed of both strong base and weak base anion resins in a “stratified bed” configuration. While a weak base resin alone would normally suffice here, the acidity of the weak base resin would require subsequent caustic addition for PH control. The inclusion of about 30% of a strong base resin in the anion exchange unit results in a neutral pH with only a small penalt y in caustic consumption. The resins of choice here are Rohm & Haas Stratabed quality IRA-94 and IRA-402, respectively. The weak acid cation unit

preceding the decarbonator will be regenerated with the regenerate from the strong acid unit to effectively utilize the acid regenerate. The two-bed demineralizer is capable of removing TDS to as low as 10 to 20 ppm.

To lower capital costs by reducing the equipment sizes, only one-third of the flow need be demineralized to obtain the ARAR for TDS. The other two- thirds of the flow would be fed through the activated alumina unit for selenium removal. Actual design conditions have been selected for a 50/50 flow spilt, to be conservative. This design reduces the volume of regenerate chemicals needed as well as waste water produced, compared with sending all of the flow through the demineralizer. Activated alumina regenerated with caustic soda and operating on the slightly acidic effluent from the decarbonator provides the conditions to optimize the selective adsorption of selenium. With a 50/50 flow split, the ARARs for both TDS and selenium would be easily achieved in the final effluent. This system will include a conductivity controller on the final plant effluent to automatically maintain the desired TDS level.

The safety of nearby communities should not be adversely affected and the risk of harm to the environment should not be increased as this treatment process will effectively remove inorganic contaminants from the ground water.

4.3.4.3 Implementability

Ion exchange technology utilizes specific resins to remove by adsorption the groundwater contaminants including heavy metals and total dissolved solids. Resins are selected based on contaminants to be removed. Ion exchange units are commercially available off the-shelf systems that can be purchased and installed readily. The operation of ion exchangers require the resins to be periodically regenerated before treatment can resume. The regenerated waste products will require additional treatment in the Building 374 Process Waste Treatment System.

The proposed system is designed for ease of operation and minimizes the volume of regeneration wastes requiring treatment in the Building 374 Process Waste Treatment System. Based on a flow rate of 30 gpm, 8 hours per day, and the influent characteristics indicated in Table 4-1, regeneration of the exchange resins will be needed once every three days. A total of approximately 6,000 gallons of waste water will be produced each regeneration period. This is equivalent to 14,000 gallons per week. It is estimated that the system will require 40 man-hours per month for operating, maintenance, and monitoring. The majority of this time is required during the regeneration periods.

4.3.4.4 Costs

Estimated capital and operational costs for the ion exchange treatment unit are shown in Table 4-5. The capital cost for the ion exchange system is $287,500. The operational costs include labor, power consumption, annual replacement of the strong base anion unit, and the procurement of hydrochloric acid and sodium hydroxide used for regeneration of the ionic resins.

Assuming 10% interest rate, a 30-year operating life, and no salvage value, the present worth of the system is $699,500. These costs do not include any capital or operating costs associated with the treatment and final disposal of the ion exchange and activated alumina regeneration wastes. These waste streams will be treated in the Building 374 Process Waste Treatment System. The other two inorganic treatment systems being considered for use (electrodialysis and reverse osmosis) also will be utilizing Building 374 for treatment of waste products.

TABLE 4-5

OVERALL COSTS FOR THE ION EXCHANGE GROUND-WATER TREATMENT UNIT

ITEM	CAPITAL COST (Dollars)	ANNUAL COST (Dollars)
Building [1]	$162,500	
Treatment Unit & Equipment	125,000	
Operating Costs[2]		
- Acid[3]		2,300
- Caustic[4]		1,600
- Power[5]		1,800
- Strong Base Anion Unit Replacement[6]		9,000
- Operation and Maintenance[7]		29,000
TOTAL	$287,500	$ 43,700

[1] Inorganic treatment system assigned 1/2 of building cost
[2] Based on a flowrate of 30 gpm, 8 hr/d with a recycle stream 24 hr/d
[3] 3.08 lb/1000 gal @ $0.14/lb for 100% HC1
[4] 2.45 lb/1000 gal @ $0.125/lb for 100% NaOH
[5] 4 HP, 24/d @ $0.07/k Wh
[6] 1/year
[7] 40 hrs/month @ $61/hour

PRESENT WORTH

Present Worth Factor (PWF) = 9.427 (for annual operating costs)

$43,700/year x 9.427 =	$412,000
1989 capital cost =	$287,500
	$699,500

4.3.5 Electrodialysis (Inorganic Contaminant Removal)

4.3.5.1 Description

In the electrodialysis process, the application of an electrical potential between a cathode and anode causes the separation of ionic components of a solution. This is accomplished by alternately placing anionic and cationic semipermeable membranes across the current pathway. When a current is applied, the cations migrate toward the negative electrode and the anions migrate toward the positive electrode. Because of the alternate spacing of cation- and anion-permeable membranes, cells of concentrated and dilute salts are formed. The electrodialysis process is shown in Figure 4-5. Because electrodialysis will not meet ARAR-based performance standards for selenium, ion exchange will also be required for effective treatment. Furthermore, to avoid uranium loading on the selenium-specific exchange unit (which would ultimately render it non-regenerable), a uranium-specific exchange unit is necessary. Thus, the first unit used is a strong base anion exchanger designed selectively for uranium removal. The ground water is then passed through an activated alumina unit prior to electrodialysis to achieve selenium removal. This is necessary since vendors have indicated that electrodialysis may not be capable of removing selenium to the ARAR of 0.01 mg/l. The activated alumina would be sized to require regeneration once every three days. Rocky Flats' potable water supply will be used to provide the water for regenera tion. Following the activated alumina unit, ground water to be treated is pumped through the electrodialysis membranes which are separated by spacers and assembled into stacks. As the water passes through, the salinity becomes more concentrated in one space, and less concentrated in the adjacent space. The water is passed through several stacks until the desired salinity concentrations are achieved. The water is usually retained for about 10 to 20 seconds in a single stack or stage. This process may be operated in either a continuous or batch mode. Multiple units can be arranged either in parallel to provide the necessary hydraulic capacity or in series to effect the desired degree of dernineralization. Makeup water is used to continuously clean the semipermeable membranes during operation.

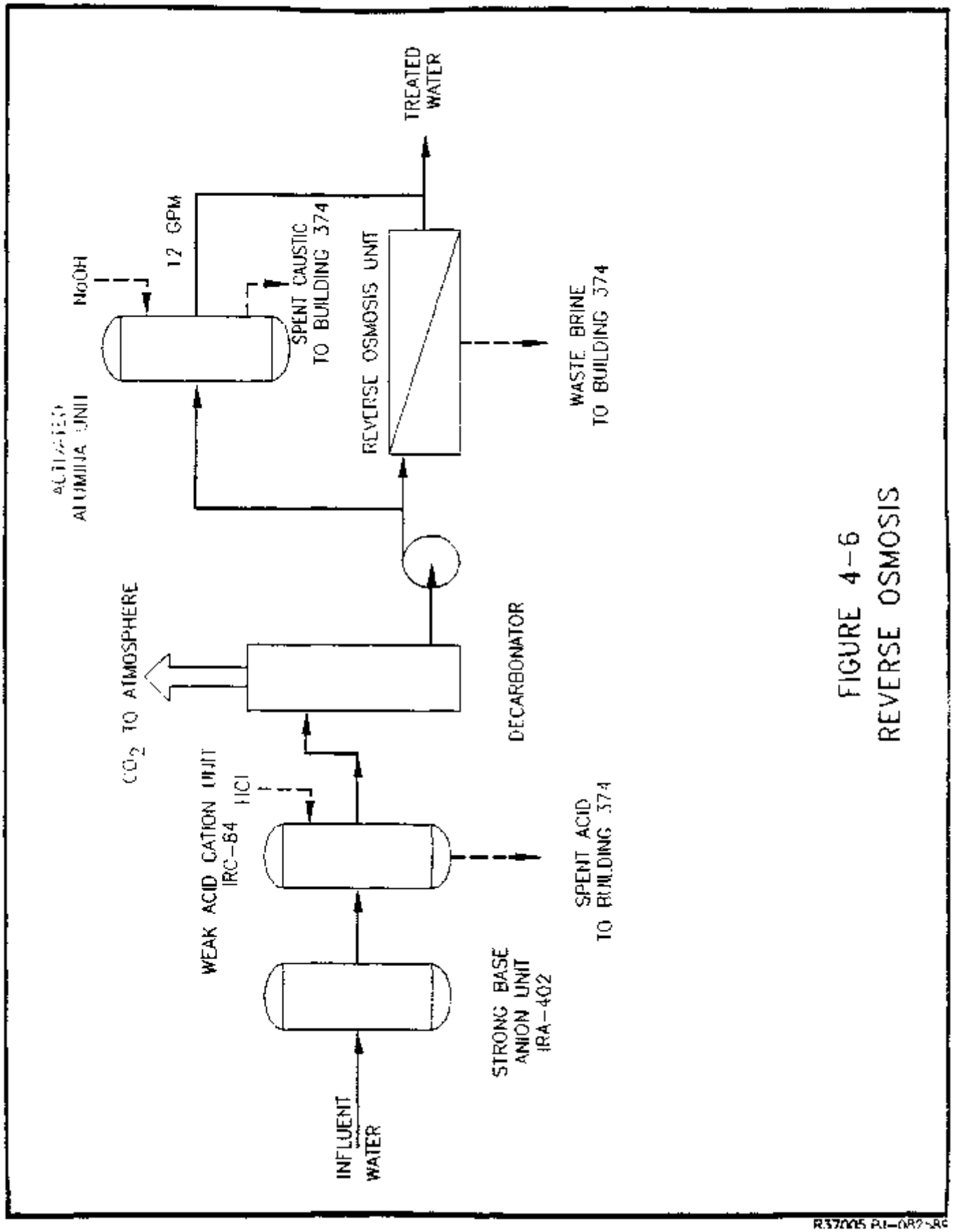

FIGURE 4-6
REVERSE OSMOSIS

R37005 R1-082-86

4.3.5.2 Effectiveness

Electrodialysis is capable of removing all of the inorganics to below the chemical-specific ARARs except for selenium. To accomplish the selenium removal, the activated alumina unit is used. Total dissolved solids (TDS) reduction can be controlled by adjusting the current level in the electrodialysis unit. The system would be operated until the inorganic chemical-specific ARARs in the ground water are all met, at which time further treatment will be unnecessary. A strong base anion unit is used to remove the uranium. This unit will not be regenerated, but will be periodically disposed as a low-level radioactive waste and replaced. In this way, no radioactive regenerate wastes will be produced, and only one unit need be handled and disposed as a radioactive waste.

Appropriate safety measures required when moving and installing large equipment will be complied with during construction. The operation and maintenance of the system will be by personnel who are trained in the handling of hazardous chemicals as well as hazardous and radioactive wastes. The operators will not be exposed to any chemical hazards during routine system operation. The safety of nearby communities should not be adversely affected and the risk of harm to the environment should not be increased.

The only other waste generated from the process requiring ultimate landfill disposal will be the salts produced in the Building 374 Process Waste Treatment System. Thus, this alternative minimizes the amount of waste requiring land disposal.

4.3.5.3 Implementability

While no treatability studies have been performed, process modeling indicates that the activated alumina, strong base cation, and electrodialysis units would meet all of the performance goals. A discussion of the performance efficiency and implementability of the activated alumina and strong base anion units is given in Section 4.3.4.3. Electrodialysis is not

a widely used technology for this type of application, and the number of case studies available for comparison is limited.

One problem associated with the use of the electrodialysis process involves the use of the semipermeable membranes. These membranes are non-chemical- specific and cannot be designed to selectively remove the metals of concern from the ground water. As with other membrane processes, scaling and clogging of the membranes with salts of low solubility is a potential problem. Precise process control and system monitoring are required to ensure proper membrane operation. The concentrate f rom the electrodialysis unit and the activated alumina regeneration waste will both be treated in the Building 374 Process Waste Treatment System.

Approximately 10% of the influent flow to the electrodialysis unit will be rejected as concentrate. This concentrate, along with the activated alumina regeneration waste, will total approximately 15,000 gallons per week. Since the concentrate will be sent to Building 374, only 90% of the influent flow will be returned as treated effluent to the South Interceptor Trench (see Section 4.5). The consumptive use of ground-water potentially tributary to the South Platte River normally requires an approved augmentation plan from the Colorado State Engineer; however, an augmentation plan will not be required for the IRA because it is a CERCLA action. Nevertheless the 10% return flow deficit will be replaced by the addition of water from the Rocky Flats Plant potable water supply prior to discharge.

It is estimated that 60 man-hours per month will be required for operation, maintenance, and system monitoring. Most of this time will be required during the activated alumina regeneration periods, and for monitoring of proper membrane function.

4.3.5.4 Costs

Estimated costs for the electrodialysis treatment unit are shown in Table 4- 6. Capital costs f or the electrodialysis system are approximately $307,500. Operational costs include the procurement of acid and caustic for activated alumina regeneration, replacement of resins and

TABLE 4-6

OVERALL COSTS FOR THE ELECTRODIALYSIS GROUND-WATER TREATMENT UNIT

ITEM	CAPITAL COST (Dollars)	ANNUAL COST (Dollars)
Building [1]	$162.500	
Treatment Unit & Equipment	145,000	
Operating Costs [2]		
S Acid [3]		500
S Caustic [4]		500
S Power [5]		1,800
S Membranes [6]		1,100
S Strong Base Anion Unit Replacement [7]		9,000
S Operation and Maintenance [8]		44,000
TOTAL	$307,500	$ 56.900

[1] Inorganic treatment system assigned 1 / 2 of building cost
[2] Based on a f lowrate of 30 gpm, 8 hr / d
[3] 0.67 lb/1000 gal @ $ 0.14/lb or 100% HCI
[4] 0.76 lb/1000 gal @ $ 0.125/lb for 100% NaOH
[5] 4.8 kWh/1000 gal @ $ 0.07/kWh
[6] $ 0.02/1000 gal
[7] 1/yr
[8] 60 hrs/ month @ $ 61 /hour

PRESENT WORTH

Present Worth Factor (PWF) - 9.427 (for annual operating costs)

$56,900/year x 9.427 =	$ 537,000
1989 capital cost =	$ 307,500
	$ 844,500

membranes, labor, and power consumption. The present worth for the system based on a 10% simple interest rate, a 30-year duration of operation, and no salvage value, is estimated to be $844,500.

These costs do not include any capital or operating costs associated with the treatment and final disposal of the activated alumina regeneration waste and electrodialysis waste brine. These waste streams will be treated in the Building 374 Process Waste Treatment System. The other two inorganic treatment systems being considered for use (ion exchange and reverse osmosis) also will be utilizing Building 374 for treatment of waste products. The disposal costs of the strong base anion unit as a low-level radioactive waste have not been included.

4.3.6 Reverse Osmosis (Inorganic Contaminant Removal)

4.3.6.1 Description

The reverse osmosis (RO) treatment system shown in Figure 4-6 is similar in concept to the ion exchange alternative described in 4.3.4. Ground water is first treated with a strong anion exchange to remove uranium. The water is next passed through a weak acid cation exchange unit for the removal of heavy metals, including strontium and manganese. This unit also removes the TDS associated with carbonate hardness with subsequent production of carbonic acid. The carbonic acid formed is removed by decarbonation. Following decarbonation, the flow is split between a reverse osmosis treatment unit (for TDS removal) and an activated alumina unit for selective selenium removal.

The reverse osmosis unit separates dissolved salts from water by filtering water through a semi-permeable membrane at a pressure greater than the osmotic pressure caused by the dissolved salts. The operating pressure required can approach 10,000 kN/m^2 (1,000 lb/in^2). The treated water that passes through the membrane is called the permeate while the reject solution is called the concentrate. As the permeate is typically 10 to 15% of the influent, several membranes must be staged in series for treatment of the concentrate to maximize

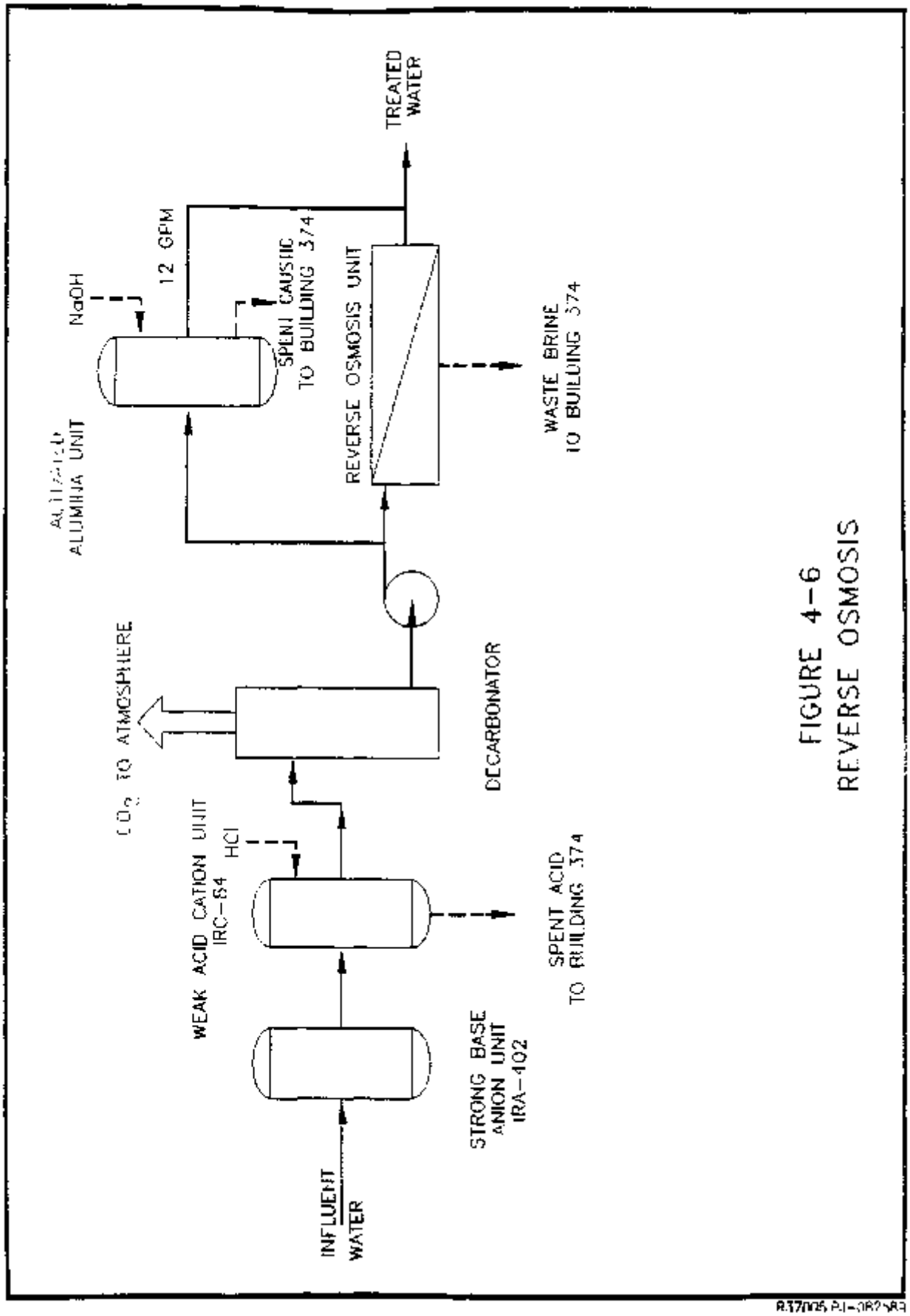

FIGURE 4-6
REVERSE OSMOSIS

837005 PJ-082989

permeate output and minimize concentrate rejected. Concentrate rejected from the RO unit and wastes from regeneration of the resins will be treated in the Building 374 Process Waste Treatment System. Rocky Flats' potable water supply will be used to provide the regeneration water for the weak acid cation unit and the activated alumina unit.

4.3.6.2 Effectiveness

Reverse osmosis treatment technology has been proven to remove inorganic contaminants from ground water to levels that comply with the chemical- specific ARARs. This technology does have several problems associated with fouling of the filter membrane which can be mitigated by pretreatment to extend the membrane life.

Pretreatment with a strong acid anion exchange unit is used for selective uranium removal. This confines the buildup of radioactivity to this unit, which is advantageous from a health and safety and operational viewpoint. The performance of this unit is described more fully in Section 4.3.4.3. The ground water is then passed through a weak acid cation exchange unit followed by decarbonation for the removal of iron and manganese. This yields an acidic feed which reduces the potential for scaling within the reverse osmosis unit. Based on the influent design criteria indicated in Table 4-1, one vendor of reverse osmosis has indicated that 12 membranes in series are required to achieve a permeate flow of 75% of the total flow including recycle.

To lower the capital cost by reducing the reverse osmosis equipment sizes, only one-third of the total flow need be sent through the reverse osmosis unit to obtain the ARAR for TDS and metals other than selenium. The other two-thirds of the flow would be fed through the activated alumina unit for selenium removal. With such a split flow, all of the inorganic chemical- specific ARARs would be achieved in the final effluent.

Approximately 25% of the influent flow to the reverse osmosis unit will be rejected as concentrate. This concentrate, as well as the regeneration wastes from the ion exchange units,

will total approximately 21,000 gallons per week. Since these wastes would be sent to Building 374, only 75% of the influent flow would be returned as treated effluent to the South Interceptor Trench (see Section 4.5). The consumptive use of ground-water potentially tributary to the South Platte River normally requires an approved augmentation plan from the Colorado State Engineer; however, an augmentation plan will not be required for the IRA because it is a CERCLA action. Nevertheless the 25% return flow deficit will be replaced by the addition of water from the Rocky Flats Plant potable water supply prior to discharge.

The weak acid cation resin and activated alumina will have to be regenerated using acid and caustic soda to maintain the treatment efficiency. The use of acids and caustics will require that operators are aware of this potential hazard. The operation of the system will be by personnel that are properly supervised and trained in the system operation and potential hazards.

Treated water will be monitored to ensure that the removal of inorganic contaminants is maintained prior to discharge to the environment.

Nearby communities and the environment should realize no safety concerns as this treatment process will effectively remove inorganic contaminants from the ground water. No short term safety concerns for nearby communities and the environment are anticipated during implementation of this process.

4.3.6.3 Implementability

As with ion exchange, reverse osmosis units are commercially available and routinely used to desalinate water supplies. The unit can be readily purchased and installed.

It is estimated that 60 man-hours per month will be required for operation, maintenance, and system monitoring. The majority of this time will be required for the regeneration periods, and for monitoring the reverse osmosis membrane operation.

4.3.6.4 Costs

Estimated capital and operational costs for the reverse osmosis treatment alternative are shown in Table 4-7. The capital cost for the reverse osmosis system is $302,500. The operational costs include the costs of power, labor, membrane and resin replacement, and the procurement of hydrochloric acid and sodium hydroxide for regeneration of the cation resin and activated alumina.

Assuming a 10% interest rate, a 30-year operating life, and no salvage value, the present worth of the system is $853,500. These costs do not include any capital or operating costs associated with the treatment and final disposal of the reverse osmosis concentrate and regeneration wastes. These waste streams will be treated in the Building 374 Process Waste Treatment System. The other two inorganic treatment systems being considered for use (ion exchange and electrodialysis) also will be utilizing Building 374 for treatment of waste products. The disposal costs of the strong base anion unit as a low-level radioactive waste have not been included.

4.4 COMPARATIVE ANALYSIS OF THE GROUND WATER TREATMENT TECHNOLOGIES

4.4.1 Organic Contaminant Treatment Technologies

Based on performance, reliability, implementability, safety, and environmental and institutional impacts, there is not a substantial difference between the three processes. The present worth of each of the three alternatives has been estimated assuming a simple interest rate of 10% over a 30-year period of operation with no salvage value. For activated carbon adsorption, the present worth is $1,201,500; for UV/peroxide oxidation, $1,329,500; and for air stripping with both liquid and vapor phase activated carbon, $960,500. The UV/peroxide oxidation system is more expensive than the other two treatment systems.

TABLE 4-7

OVERALL COSTS FOR THE REVERSE OSMOSIS GROUND-WATER TREATMENT UNIT

ITEM	CAPITAL COST (Dollars)	ANNUAL COST (Dollars)
Building [1]	$162,500	
Treatment Unit & Equipment	140,000	
Operating Costs [2]		
S Acid [3]		1,300
- Caustic [4]		300
- Power [5]		1,600
- Membranes [6]		2,200
- Strong Base Anion Unit Replacement [7]		9,000
- Operation and Maintenance [8]		44,000
TOTAL	$302,500	$ 58.400

[1] Inorganic treatment system assigned 1 / 2 of building cost
[2] Based on a f lowrate of 30 gpm, 8 hr / d
[3] 1.74 lb/1000 gal @ $ 0.14/lb or 100% HC1
[4] 0.39 lb/1000 gal @ $ 0.125/lb for 100% NaOH
[5] 10 HP, 8 hr/d @ $ 0.07/kWh
[6] $ 6/day
[7] 1/yr
[8] 60 hrs/ month @ $ 61 /hour

PRESENT WORTH

Present Worth Factor (PWF) = 9.427 (for annual operating costs)

$58,400/year x 9.427 =	$ 551.000
1989 capital cost =	$ 302.500
	$ 853.500

Since all three processes will effectively decontaminate the ground-water, the ultimate destruction of ground-water contaminants has become a factor in the choice of treatment. The air stripping and activated carbon adsorption systems both use activated carbon, and with regeneration, the contaminants that have adsorbed onto the carbon would eventually be destroyed. However, this assumes that the carbon is not radioactively contaminated, thereby requiring shipment to the Nevada Test Site for disposal. Uranium, either naturally occurring or resulting from past waste disposal, will likely adsorb to the activated carbon but would pass through the UV/ peroxide system. Although use of an ion exchange unit before activated carbon treatment would obviate this issue, adsorption of organics on the exchange resin would reduce resin performance and render this treatment scheme inefficient. SARA favors innovative treatment technologies that destroy contaminants, and UV/peroxide meets this objective. Therefore, the advantage provided by a UV/peroxide system of directly destroying the volatile organic ground-water contaminants is the deciding factor in selecting UV/peroxide as the preferred process for ground-water treatment.

4.4.2 Inorganic Contaminant Treatment Alternatives

Based on effectiveness and cost, there is not a substantial difference between the three inorganic treatment processes. All three are capable of meeting the chemical-specific ARARs, and they compare favorably in terms of operational safety and environmental considerations. The present worth of each alternative has been estimated assuming a simple interest rate of 10% over a 30-year period of operation with no salvage value. For ion exchange, the present worth is $862,000; for electrodialysis, $1,007,000; and for reverse osmosis, $1,016,000. The capital costs of the three alternatives are within roughly 10% of each other and are all considered competitive.

The electrodialysis and reverse osmosis processes are both membrane processes which require a high degree of process control for effective operation. The membranes are very sensitive to fouling, and proper pretreatment is needed to ensure steady performance over

time. The ion exchange process utilizes resin beds in place of membranes and is considered more reliable for long term operation.

All these processes produce wastes which would be treated in the Building 374 Process, Waste Treatment System. Electrodialysis and ion exchange produce nearly equal volumes of waste (14,000-15,000 gallons per week). The reverse osmosis system produces roughly 50% more, or 24,000 gallons per week.

In both the electrodialysis and reverse osmosis alternatives, a portion of the water being treated is discharged to Building 374 as process waste. This requires that a supplemental water source is needed to augment the treated effluent prior to discharge in order to ensure complete recharge. Since this interim remedial action is being executed under CERCLA, it would not be necessary to obtain a ground-water augmentation permit. However, Rockwell would be required to maintain records documenting the augmentation and would have to sample the supplemental water source periodically to ensure compliance with the ARARs. These tasks represent an institutional requirement and cost (not included here) which ion exchange would not be subject to. For this reason and reasons discussed above, ion exchange has been selected as the preferred alternative for the removal of the inorganic contaminants from the ground water.

44.3 Preferred Ground Water Treatment System

As summarized above, the UV/ peroxide treatment system has been selected for the removal of organic contaminants, and ion exchange for the removal of inorganic contaminants. In order to maximize the overall system performance, the ground water will be treated as shown in the flow diagram in Figure 4-7.

As shown in this figure, the ground water will be pumped into two surge tanks. The surge tanks insure that the treatment system will receive a constant flow of 30 GPM, 8 hours

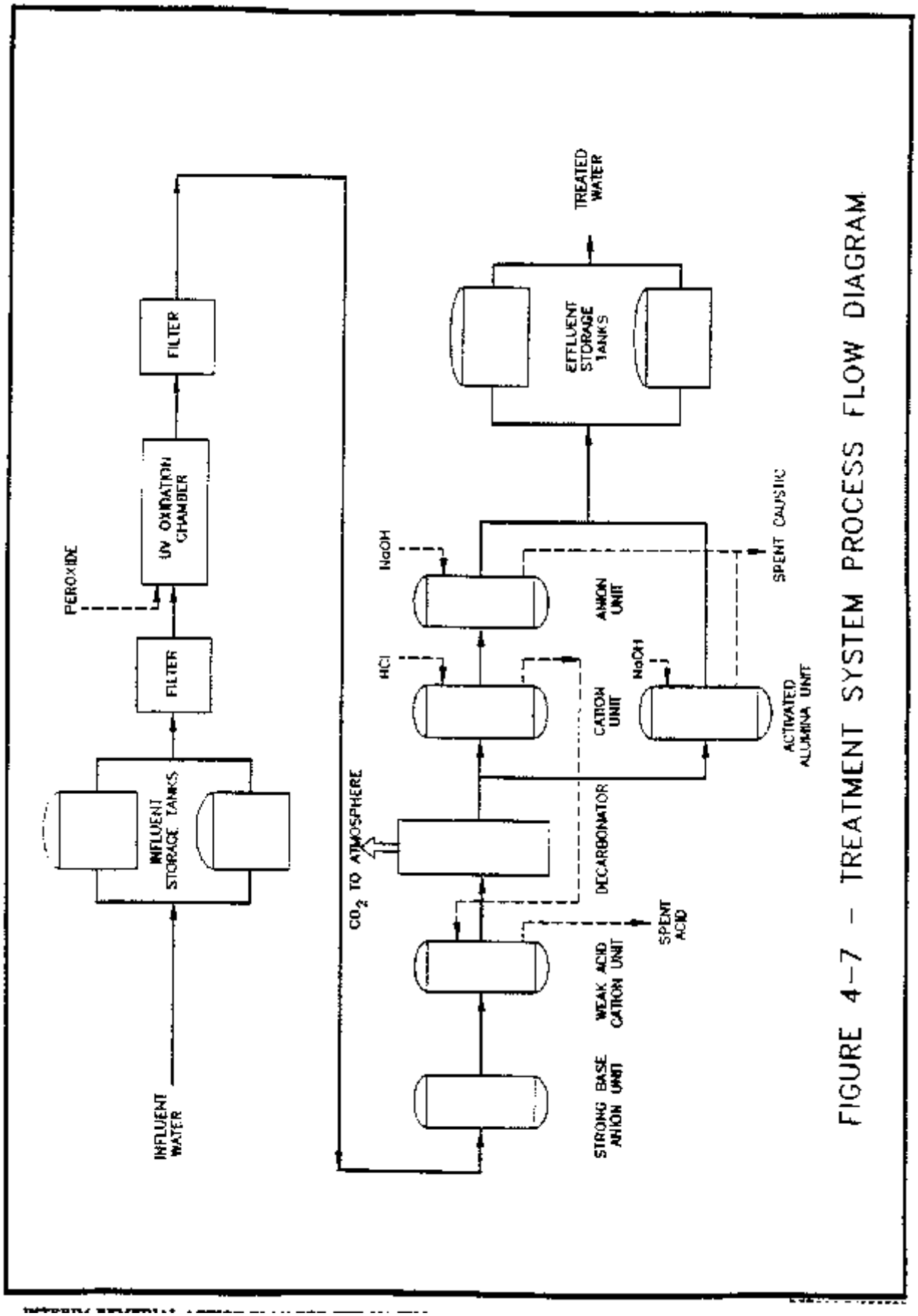

FIGURE 4-7 - TREATMENT SYSTEM PROCESS FLOW DIAGRAM

per day. These tanks also provide approximately two days of collection potential when the treatment system is not operating.

From the surge tanks, the water is pumped through filters to remove suspended solids. The water next is sent to the UV/peroxide unit where the volatile organic contaminants are destroyed. While iron may be oxidized by the peroxide, the concentrations of ferric iron formed will not adversely affect performance of the unit. Should the ferric iron precipitate from solution within the resin bed of the weak acid cation unit, it will be removed during the regeneration cycle with HCI.

Finally, the water is passed through the ion exchange units for the removal of uranium and inorganic contaminants. With the exception of the uranium removal unit which is not regenerated, the regenerate wastes from the other ion exchange resins are sent to Building 374 for final treatment. Treated water is pumped to the effluent storage tanks for analysis prior to discharge. Should the effluent quality be unacceptable for discharge, the water will be returned to the influent storage tanks for further treatment.

4.5 DETAILED EVALUATION OF REMEDIAL ACTION ALTERNATIVES

4.5.1 Alternative 1: Collect Ground Water from Footing Drain. Source Well and French Drain, and Discharge to the South Interceptor Trench Downgradient of the 881 Hillside Area

4.5.1.1 Description

This alternative involves construction of a french drain (trench) at the location shown on Figure 4-8. The drain is located downgradient of the 881 Hillside SWMUs and monitoring wells 2-87 and 48-87, and upgradient of the South Interceptor Ditch. This location is downgradient of VOC contaminated alluvial ground water. The french drain will extend along the entire length of the saturated alluvium. The drain will be keyed at least two feet into bedrock of a hydraulic conductivity of 1×10^{-6} centimeters/second (cm/sec) in order to

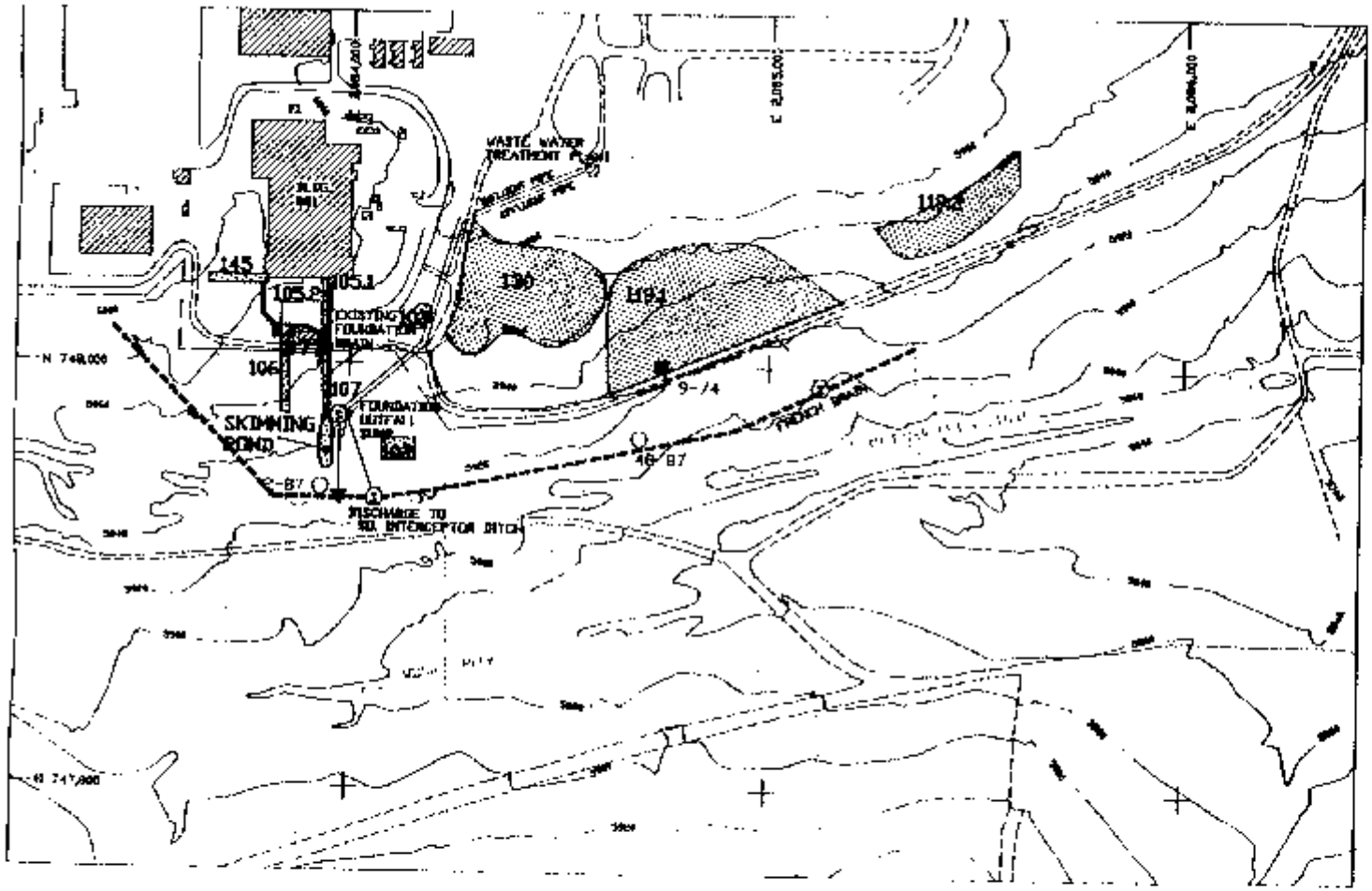

SCALE: 1"=300'

EXPLANATION

- SOLID WASTE MANAGI UNITS
- FRENCH DRAIN SYSTE
- SUMPS (location to finalized during detail design)
- 9-74 RECOVERY WELL
- 48-87 ALLUVIAL MONIT WELLS

FIGURE 4-8

ALTERNATIVE 1:
FRENCH DRAIN COLLECTI
WITH TREATMENT

fully penetrate the soils, and will be approximately 2,100 feet long. As such, the drain will intercept and contain all alluvial ground-water flowing from the area. A PVC drainage pipe will direct flow under gravity to two 3-root diameter concrete collection sumps. Each sump will be equipped with a submersible sump pump to deliver water from the drain to the new treatment plant (see Section 4.4). Each of the two pumps will have sufficient capacity to deliver the entire discharge of the drain to the treatment plant. The downgradient face and bottom of the french drain and drain sump will be covered with a synthetic membrane to limit flow from the clean side of the trench (Figure 4-9). The upgradient face of the french drain will be covered with a geotextile filter fabric to minimize the intrusion of soils into the drain rock. The fabric will be of a size that prevents clogging. The inclusion of the downstream synthetic membrane coupled with the continuity of the drain is expected to provide positive cutoff of the ground water. Water collected from a source well at SWMU 119.1 (a new well near well 9-74) will also be treated in the new treatment plant. In addition, a sump will be built to collect the flow from the Building 881 footing drain. Two sump pumps will be used to transfer the footing drain flow to the treatment plant in a separate piping system. Effluent from the treatment plant will be discharged to the South Interceptor Trench which flows into Pond C-2. Pond C-2 discharges to Woman Creek under provision of RFP's NPDES Permit.

Flow from the trench could be on the order of 10 gpm initially, but is expected to drop to less than 5 gpm within a few days. The combined steady state flow from the trench and source well is estimated to be as low as 2 gpm. Flow from the Building 881 footing drain is expected to be 5 gpm or less.

4.5.1.2 Effectiveness

The proposed interim action will collect ground water from the soils on the 881 Hillside Area in a french drain with a downstream impermeable membrane. The french drain that will be constructed Figure 4-8 on the 881 Hillside is intended to collect ground water containing volatile organics from the colluvium/alluvium system. The drain will be keyed two feet into bedrock of a hydraulic conductivity of 1 x 10^{-6} centimeters/second (cm/s) to fully penetrate

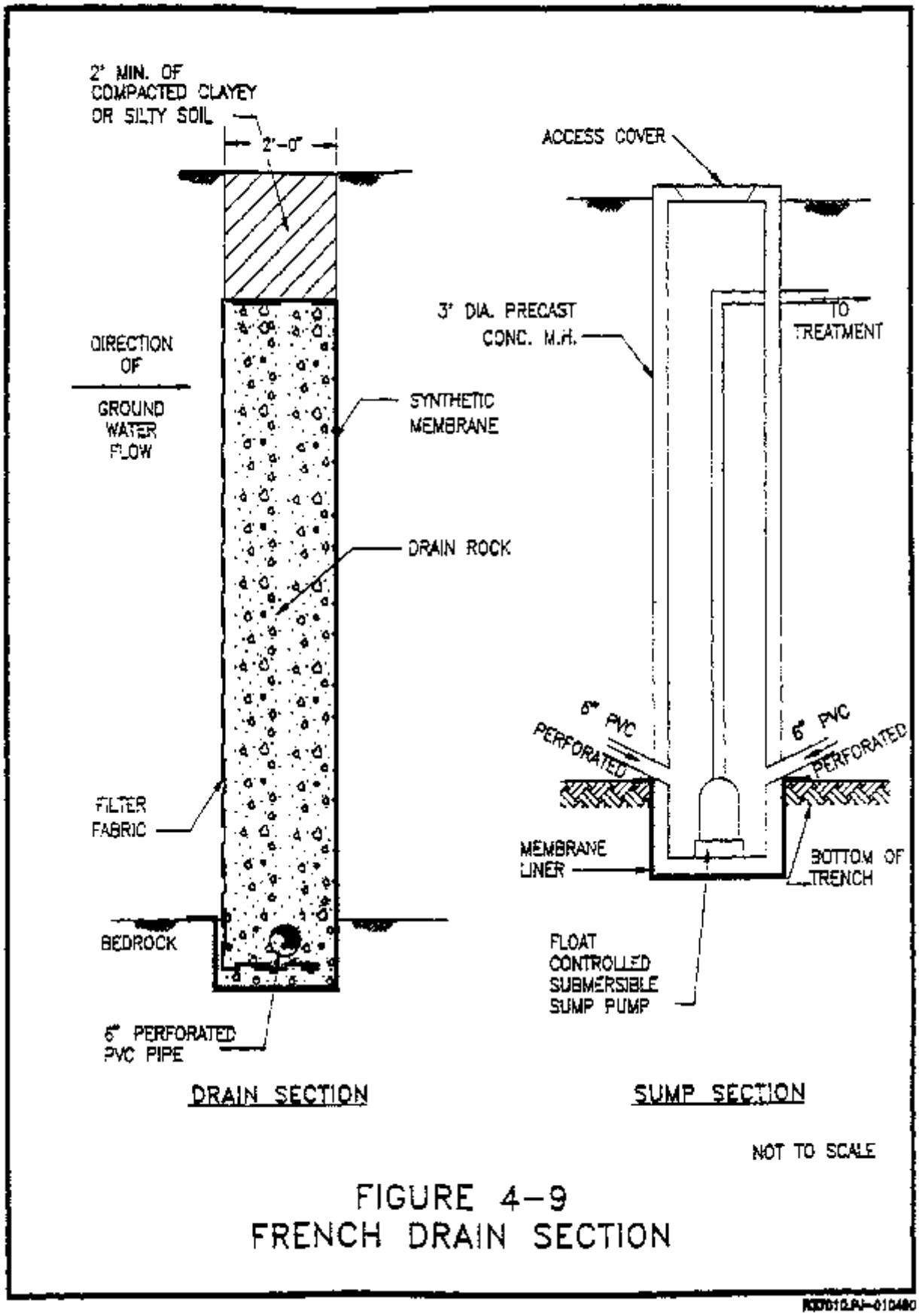

FIGURE 4-9
FRENCH DRAIN SECTION

the colluvium so that ground water will not flow under the drain in the colluvium. The bedrock has a hydraulic conductivity more than two orders of magnitude smaller than the colluvium. Therefore, the drain will be effective in collecting colluvial ground water.

The penetration into bedrock is not intended to reduce the migration of contaminants into bedrock. However, the installation and operation of the drain will have two beneficial impacts on the bedrock ground-water flow system. First, the drain will slightly decrease the rate of downward movement of colluvial ground water because the potentiometric surface in the colluvium will gradually be lowered and, as a consequence, the gradient between the colluvium and the bedrock will be slightly less. Second, the drain will remove the contaminated colluvial/alluvial ground water that is a potential source for contamination of bedrock ground water. The interim action is intended to remove volatile organics form the colluvial/alluvial ground-water and is anticipated that the french drain will be effective in both collecting the colluvial/alluvial ground water and limiting releases from the 881 Hillside Area.

The proposed treatment system will remove both the organic and inorganic groundwater contaminants to below the chemical-specific ARARs given in Section 3.3.1. A complete analysis of chemical-specific ARARs pertinent to subsurface discharge is presented in Section 3.3. Location-specific ARARs are discussed in Section 3.3.2.

The interim action at the 881 Hillside Area is expected to have minimal impacts on Woman Creek. Although the french drain is expected to intercept all of the colluvial flow from the hillside area, the water will be returned to the hillside by means of surface discharge (after treatment) to the South Interceptor Ditch. The point of discharge will be at the west end of the hillside area (upstream) and the discharged water will flow along the ditch to Pond C-2. This should maintain the artificial wetland that exists in the South Interceptor Ditch. The treated water is expected to return to the ground-water system by infiltration from the South Interceptor Ditch and Pond C-2.

Losses from the ground-water system resulting from the interim action are expected to be as follows:

- It is possible that a certain diminution of flow in the creek will occur directly downhill of the area because not all of the discharge will infiltrate from the South Interceptor Ditch. However, this possible diminution is expected to be negligible because the hillside area only amounts to about 10 percent of the recharge area to the creek (total length of both banks is approximately 20,000 feet from the hillside to the headwaters of the creek, while the cut-off length at the hillside is approximately 2,000 feet). In any event, the creek will be nearly fully recharged by infiltration from Pond C-2.

- Some evaporation will occur from both the South Interceptor Ditch and Pond C-2.

The impacts of the losses are expected to be negligible because the total flow currently recharging the ground-water system of the Woman Creek Valley Fill Alluvium is a small proportion of the total flow and most of the intercepted ground water will return to the system in any event. The losses are expected to have no noticeable impact on the availability of ground water off-site because the vast majority of the ground water in the Alluvium is currently consumed by evapotranspiration within the plant boundary.

Worker safety precaution will be required during construction of this alternative because of the potential for encountering contaminated soil or water in the excavation. However, at the location of the drain it is expected that contamination in both soil and water will not be detected. The safety of nearby communities should not be adversely affected and the risk of harm to the environment should not be increased from the construction or operation of this remedial action alternative. Treated water will be monitored to ensure contaminants are within regulatory guidelines prior to discharge.

4.5.1.3 Implementability

French drains have been used successfully for many years for control of ground water. French drains are almost always effective, except when ground water can flow over, under or around the drain, or when the drain becomes clogged. The drain proposed for the 881 Hillside will fully penetrate the colluvium and be keyed into claystone bedrock, precluding

the possibility of flow under or over the drain. It extends uphill on the west side to an elevation equal to that of SWMU 107 and is keyed into a dry ridge on the east end. This should preclude flow around the drain. Clogging is not expected to be a problem based on past experience of the footing drain at Building 881, which has been in service since the early. 1950's without clogging. Replacement of the pumps in the sumps should be expected as part of routine operation.

Operation and maintenance requirements are small for a french drain. Flow to the sump is by gravity. Liquid level controllers switch on a submersible pump in the central sump whenever there is sufficient water present. A high level alarm will provide an indication of pump failure although inspection of the french drain and pumping records on a weekly basis will ensure that the collection system is functioning. Any necessary repairs will be undertaken immediately. In addition, pairs of ground-water monitoring wells will be installed along the trench upgradient and downgradient at locations where the colluvium is found to be saturated or where subcropping sandstones are encountered (based on trench excavation) to monitor the effectiveness of the french drain in intercepting contaminated ground-water. Changes in ground-water quality upgradient and downgradient of the french drain will also be monitored by existing ground-water monitoring wells.

A large diameter withdrawal well will provide efficient dewatering of the alluvium in the vicinity of well 9-74 and reduce pump cycling. The well will be surrounded by monitoring wells so that an evaluation of the efficiency of the well can be easily made. It appears likely that pumping of this well will be continuous for the first several years of remediation, but may not be required later. This is due to the small amount of ground water in the vicinity of SWMU 119.1. In contrast; the footing drain at SWMU 107 has already been functioning satisfactorily for thirty years and there is no reason to believe that this will change. Collection of the footing drain flow will likely be required for the full thirty years if the source of the contaminants cannot be identified and removed. A source characterization study is currently in progress as part of the final RFI/RI and CMS/FS investigation process.

Operation and maintenance requirements for collection of the footing drain flow are minimal. Discharge from the drain will be pumped to the treatment plant based on liquid level switches. Two Pumps will be provided to protect against pump failure. Operation and maintenance of the dewatering well are similar. It too will be operated with a liquid level controller and requires little more than routine inspection. The system is highly implementable because the withdrawal well and associated pumps and mechanical connections are standard items.

Action-specific ARARs relating to soil excavation which may be pertinent to this alternative include the requirements under RCRA that address the storage of RCRA wastes in waste piles, and restrictions on the land disposal of solvent-containing wastes that exceed treatment-based standards for those constituents. Soils removed during excavation of the french drain are downgradient of all 881 Hillside Area SWMUs and are not expected to contain hazardous constituents. Also, influent and effluent piping is aligned to be outside all SWMUs. As discussed in Section 6, soil sampling and analysis will be conducted to determine if the excavated soils must be handled as a RCRA hazardous waste. Of particular relevance to the handling and storage of contaminated soil is the requirement, under RCRA, of diverting run-on away from waste piles, preventing wind dispersal of wastes, and collecting free liquids or leachate for treatment as a hazardous waste. RCRA requirements for the storage of contaminated soil in containers (roll-off boxes or drums) would also be relevant and appropriate if containers are used for storage. With respect to RCRA restrictions on the land disposal of solvent-containing wastes, after November 8, 1990 contaminated soils may not be disposed off-site in a RCRA landfill unless they have been analyzed and found to contain levels of contamination below Best Demonstrated Available Technology (BDAT) for those contaminants, or treated to BDAT standards. Soils contaminated above the BDAT levels can only be stored in containers and tanks for a period not to exceed one year. Only non-contaminated soils will be used as backfill material for the trenches.

Action-specific ARARs pertinent to surface discharge are the relevant and appropriate requirements under RCRA for the storage and treatment of hazardous waste in containers and tanks prior to surface discharge.

The design, operation, and maintenance of the treatment plant will meet chemical-specific ARARs identified for the contaminants of concern and action-specific ARARs related to the subsurface discharge of the treatment system effluent. A complete ARARs analysis for treatment operations is given in Table 3-3.

Highlights of these action-specific ARARs are listed below:

- Applicable federally approved state water quality standards must be complied with for discharges to surface or ground waters of the state. These standards may be in addition to or more stringent than other federal standards under the Clean Water Act.
- General requirements for treatment and storage of RCRA hazardous waste in containers and tanks are relevant and appropriate. Recordkeeping requirements under these sections are not ARARs.

Implementation of this alternative involves only routine construction procedures. Construction of the drain can be completed in a period of approximately three months. Ground water will be effectively contained at the beginning of construction when the excavation is dewatered. The system will be operational immediately upon completion.

4.5.2 Alternative 2: Total Encapsulation

4.5.2.1 Description

This alternative involves total encapsulation of the contaminant sources near SWMU 107 and within SWMU 119.1 using RCRA caps and slurry walls at the locations shown on Figure 4-10. Each area will be covered with a three- layer cap consisting of six-inches of vegetated topsoil, a minimum of six inches of drain rock, and a composite synthetic the cover membrane/compacted soil cover of at least two-foot thickness (Figure 4-11). The surface of

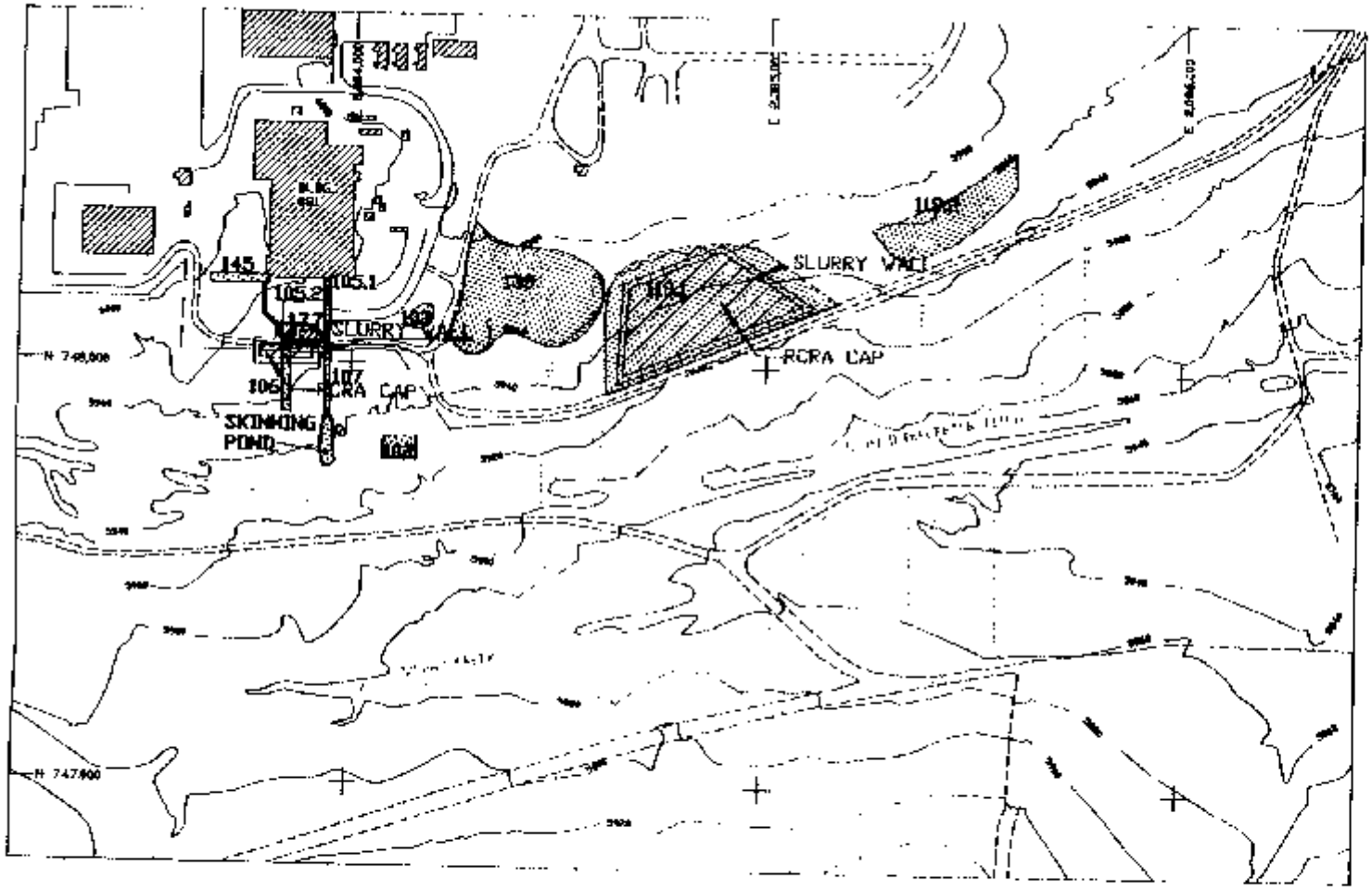

FIGURE 4-10

ALTERNATIVE 2:
TOTAL ENCAPSULATION

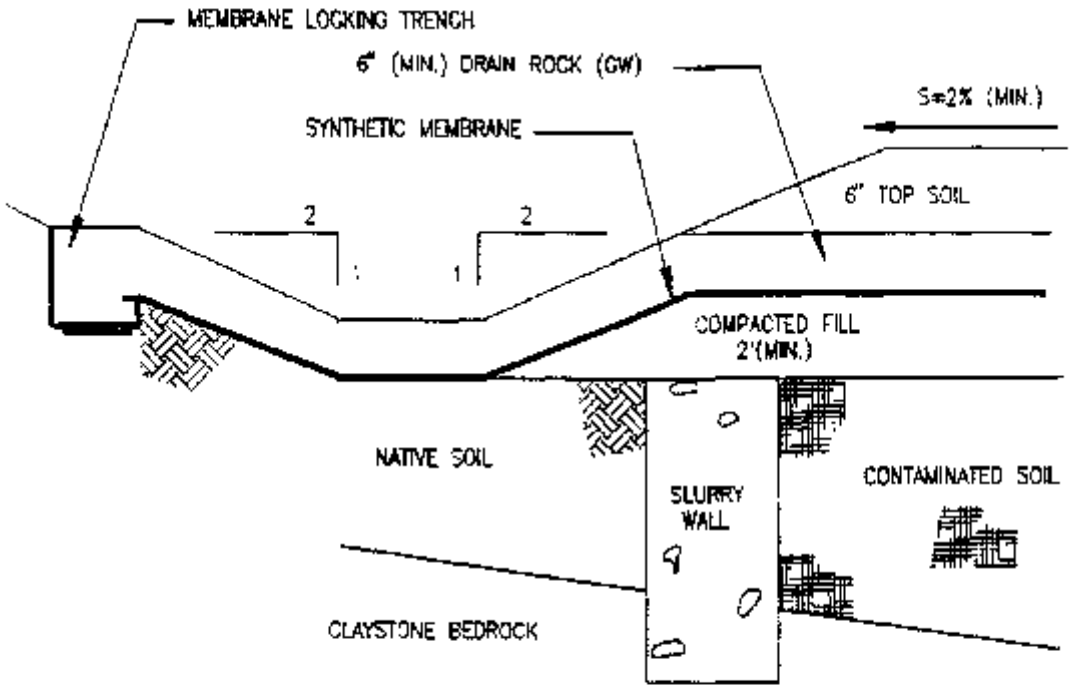

FIGURE 4-11
TOTAL ENCAPSULATION SECTION

NOT TO SCALE

R57012.PJ-09'159

will be sloped at a minimum of 2% to drain toward peripheral ditches. The peripheral ditches will discharge to the South Interceptor Trench. The cover at SWMU 107 is estimated to consist of approximately 6,000 square feet; the cover at SWMU 119.1, approximately 80,000 square feet. The covers will extend a minimum of five feet beyond the slurry walls.

Peripheral containment will be achieved by construction of soil-bentonite slurry walls to completely encircle the contaminated soils. The walls will be keyed at least two feet into claystone bedrock of a hydraulic conductivity of 1 $x10^{-6}$ cm/s. The SWMU 107 slurry wall is estimated to be approximately 320 feet long and depths are anticipated to range from about 4 to 17 feet. It is estimated that the SWMU 119.1 wall will not exceed about 20 feet in depth (15 feet average) and that it will be approximately 1,000 feet long. In addition, ground water inside the containment systems will be removed using internal sumps. This will result in hydraulic gradients toward the encapsulated soil and will reduce the potential for any releases. The small volume of water produced from the sumps will be stored in tanks on site and be transferred to a suitable treatment facility. No capital or operating costs for this treatment have been included.

The cap and perimeter ditches will be inspected on a semi-annual basis and repaired as necessary. The ditches will be maintained in clean and properly graded condition so that collected runoff is rapidly removed from the area.

4.5.2.2 Effectiveness

This alternative will adequately contain and immobilize the sources of contamination. As discussed in Section 2, ground water contamination is known to exist downgradient of SWMU 119.1 and may exist downgradient of SWMU 107. These waters will be released to the environment. This is expected to nominally impact the quality of the ground water within the Valley Fill Alluvium. Therefore, this alternative minimizes future contaminant migration from the sources and thus minimizes future public exposure to contaminants off-site while the Final RFI/RI and CMS/FS activities are completed.

Partial control of the SWMUs will be achieved as soon as the peripheral containment structures are constructed. Full control will not be achieved until the entire system is complete and pumping of the sumps begins.

Worker safety precaution will be required during construction of this alternative and during monitoring and dewatering operations. In addition, safety precautions will be required during excavation for and construction of the compacted soil barrier walls. The safety of nearby communities should not be adversely affected and the risk of harm to the environment should not be increased during construction or operation of this alternative.

4.5.2.3 Implementability

Infiltration and ground-water flow through the SWMUs is expected to be practically eliminated by the total encapsulation system. As a consequence, the release of contaminants from the SWMUs is also expected to be eliminated. It is noted that the system will not be as effective if the SWMU areas are not underlain by continuous claystone.

The useful life of the total encapsulation system is expected to exceed thirty years. The containment features involving geologic materials (slurry wall and compacted soil cover) should function indefinitely, particularly given that flow through them will be from the non-contaminated to the contaminated side. The synthetic membrane can be expected to function adequately for at least twenty years, and it is backed-up by the compacted soil layer. The vegetated cover and peripheral ditches will require regular maintenance, and the internal sump will require regular operation.

The technologies proposed in this alternative are all proven technologies. The multi-layer cap system has been used for nearly ten years with good success at many sites. Soil-bentonite slurry walls have also been used for many years to effectively control ground-water flow. The gradient control provided by the sump is a modification of the standard encapsulation system and should provide an extra level of protection.

Operation and maintenance requirements are very small for the total encapsulation alternative. There are essentially no operational requirements, with the exception of routine pumpage of the sump. This is expected to be required no more frequently than annually after the initial dewatering. Maintenance will involve inspection and cleaning of peripheral ditches, inspection and repair of the vegetated cover, and inspection and replacement of the sump pump. In addition, ground-water and surface water conditions in the vicinity of the 881 Hillside Area will be monitored.

This alternative can be implemented using standard construction practices. Seaming of synthetic membranes has become common enough that a qualified local contractor can be used.
Construction of the encapsulation systems will require about three months.

Construction of a slurry wall at SWMU 119.1 may prove impractical where the wall runs parallel to the grade (slope may be too steep). For the two legs of the wall running up the hill, it is recommended that a compacted soil cutoff wall be constructed in an excavated trench. The trench will probably vary from about 15 feet deep at the downhill end to about 2 feet deep at the uphill end. The trench can be excavated with standard earth-moving equipment. Some of the excavated material may be suitable for use in constructing the wall. The length of compacted wall is estimated to be 600 feet, while the remaining slurry portion is about 400 feet long. A compacted soil wall is expected to provide performance characteristics equivalent to a slurry wall.

Material for construction of the compacted soil cover and wall can be obtained from the Arapahoe Formation. The Arapahoe is covered by a thin veneer of colluvium along Woman Creek and could be excavated from a number of nearby areas; however, in order to avoid oversteepening the slopes, the borrow area should be established on the south side of Woman Creek.

ARARs pertinent to the total encapsulation alternative include the relevant and appropriate requirements under RCRA that address the technical specifications of capping

closure and post-closure care. In addition, soil that is excavated must be handled as a hazardous waste until sampling and analysis are performed (see Section 4.5.1.3).

Wastewater that is recovered from the source well within the encapsulated area must be treated in a facility operating in compliance with the substantive requirements of RCRA. If recovered ground-water is to be treated on site in a treatment facility, specific RCRA requirements for the treatment of hazardous waste are relevant and appropriate. If wastewater is transported off site, both the substantive and administrative requirements of RCRA will apply to the wastewater management. A complete analysis of chemical-, location-and action-specific ARARs is presented in Section 3.3.

4.5.3 Alternative 3: Collect Ground Water from Source Well and Footine Drain, and Discharge to the South Interceptor Trench

4.5.3.1 Description

This alternative involves pumping a new source well (located near 9-74) at SWMU 119.1 and collection of the footing drain discharge in a new sump near SWMU 107 (Figure 4-12). The collected water will be treated in the new treatment plant (see Section 4.4) and discharged to the South Interceptor Trench which flows into Pond C-2. Pond C-2 discharges to Woman Creek under provisions of a NPDES Permit.

It is estimated that flow from a completely dewatered 9-74 will initially be about 1 gpm but will rapidly fall to a steady flow of about 0.04 gpm. It is anticipated that the flow from the drain will be five gpm or less.

4.5.3.2 Effectiveness

Removal of the majority of contamination in the vicinity of well 9-74 will significantly minimize off-site migration of contaminants. Future off-site public exposure to the

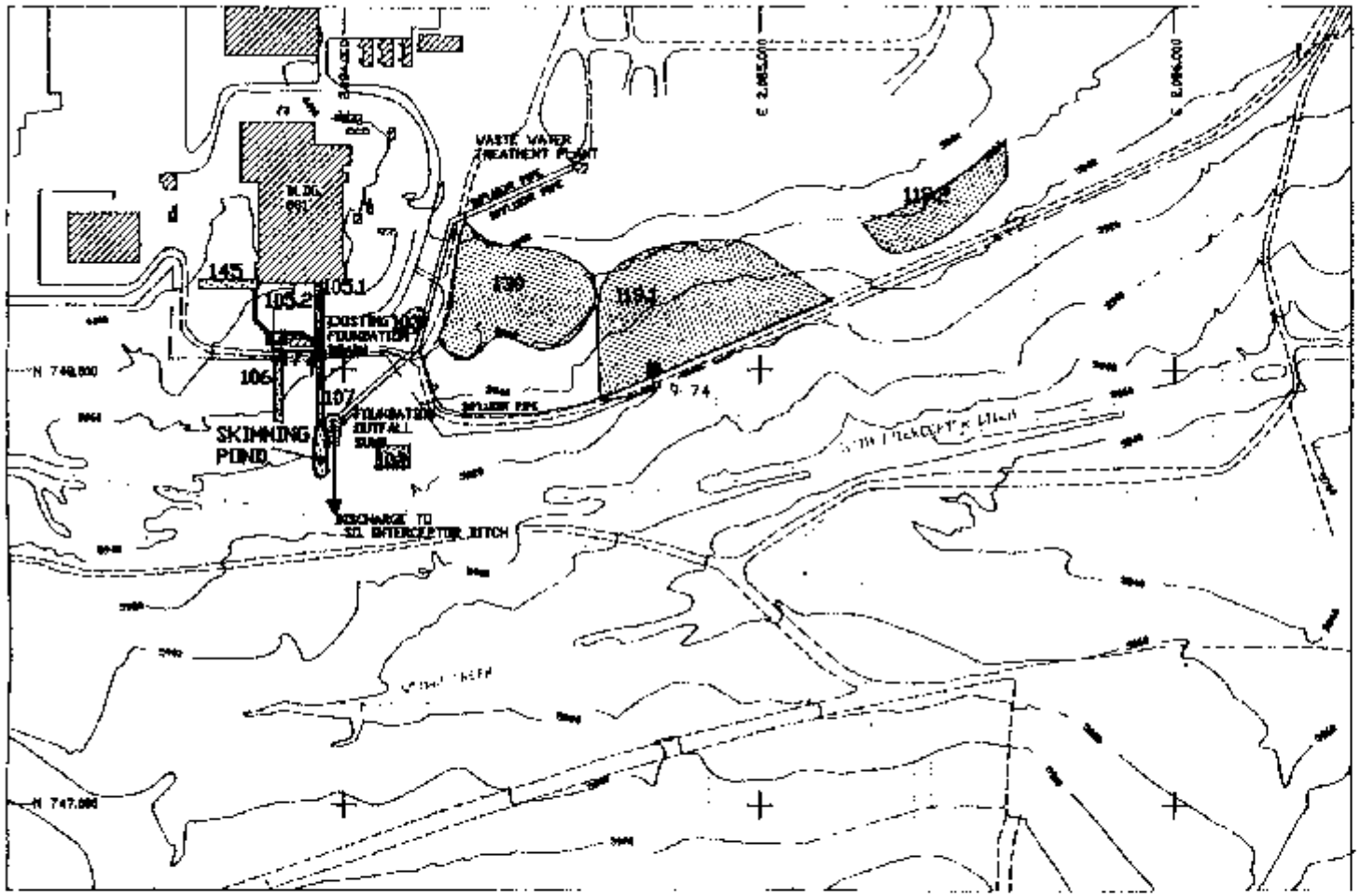

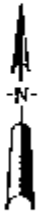

SCALE: 1"=300'

EXPLANATION

SOLID WASTE MANAG UNITS

SUMPS (location to finalized during detail design)

9-74 RECOVERY WELL

FIGURE 4-12

ALTERNATIVE 3:
FOUNDATION DRAIN & WELL 9-74
COLLECTION WITH TREATMENT

contaminants is unlikely. However, the migration of contaminated alluvial ground water beyond the 881 Hillside Area is more probable than that expected for Alternative 1which utilizes a french drain for ground water collection.

The proposed treatment system will remove both the organic and inorganic groundwater contaminants to below the chemical-specific ARARs given in Section 3.3.1. A complete analysis of chemical-specific ARARs pertinent to surface discharge is presented in Section 3.3. Location-specific ARARs are discussed in Section 3.3.2.

The safety of nearby communities should not be adversely affected and the risk of harm to the environment should not be increased from the construction or operation of this interim action alternative. Treated water will be monitored to ensure contaminants are within regulatory guidelines prior to discharge.

4.5.3.3 Implementability

The useful life of this alternative is expected to exceed thirty years. A large diameter withdrawal well will provide efficient dewatering of the alluvium in the vicinity of well 9-74. The well will be surrounded by monitoring wells so that an evaluation of the efficiency of the well can be easily made. It appears likely that pumping of this withdrawal well will be continuous for the first several years of remediation, but may not be required later. This is due to the small amount of ground water in the vicinity of SWMU 119.1.

The footing drain at SWMU 107 has already been functioning satisfactorily for thirty years and there is no reason to believe that this will change. Collection of the footing drain flow will likely be required for the full thirty years if the source of the contaminants cannot be identified and removed.

Operation and maintenance requirements for collection of the footing drain flow are minimal. Discharge from the drain will be pumped to the treatment plant based on liquid

level controls. Two pumps will be provided to protect against pump failure. Operation and maintenance of the dewatering well are similar. It too will be operated with a liquid level controller and requires little more than routine inspection. The system is highly implementable because the withdrawal well and associated pumps and mechanical connections are standard items.

The design, operation, and maintenance of the treatment plant will meet chemical-specific ARARs identified for the contaminants of concern and action-specific ARARs related to the surface discharge of the treatment system effluent. A complete ARARs analysis for treatment operations is given in Table 3-3.

Highlights of these action-specific ARARs are listed below.

- General requirements for treatment and storage of RCRA hazardous waste in containers and tanks are relevant and appropriate. Recordkeeping requirements under these sections are not ARARs.

- Applicable federally approved state water quality standards must be complied with for discharges to surface or ground water of the state. These standards may be in addition to or more stringent than other Federal Standards under the Clean Water Act.

Implementation of this alternative involves only routine construction procedures. The system will be operational immediately upon completion.

4.6 ESTIMATED COSTS FOR ALTERNATIVES

Cost estimates were prepared using in-house computer software and unit rates. In-house unit rates are based upon Rocky Flats Plant experience in planning and managing similar construction projects at this site. Other recognized references were used where site specific unit rates were unavailable and for comparison or checking. These documents include: “Compendium of Remedial Technologies at Hazardous Waste Sites,” U.S. EPA, September 1985; “Treatability Manual, Volume IV. Cost Estimating”, U.S. EPA, April 1983; and “Building Construction Data,” R.S. Means Co., Inc., 1987.

Costs are reported in 1989 dollars for both initial and future costs. Future costs include replacement of capital cost items (e.g., monitor wells or non-expendable items) and cyclic costs, such as operation and maintenance (O&M) costs, energy costs, and expendable supplies. Life cycle costs for each alternative have been presented, in 1989 dollars, as present worth cons assuming a discount rate of 10%, a duration of active remedy of thirty years, and no salvage value for purchased equipment.

Costs were analyzed by first identifying capital items common to one or more remedial alternatives. These capital items and associated costs are presented for each alternative in Table 4-8. Similarly, identified cyclic costs for each alternative are presented in Table 4-9.

Present worth analyses are performed by using the total costs presented in Tables 4-8 and 4-9, and assuming the duration of the remedy is thirty years. Year "0" begins upon initiation of design and construction activities, and system operations will continue through the end of year 30. A thirty-year period was selected as the expected duration of the IRA for use in cost analyses for two principal reasons, 40 CFR 264.117 requires a minimum of 30 years post-closure monitoring, and beyond 30 years present value costs are less than 6% of their future worth and thus become insignificant with respect to these analyses. These schedule assumptions are made to facilitate comparisons between alternatives and do not supersede any existing schedules created as a result of any administrative rule, statute, or agreement with agencies authorized to regulate remedial activities at this site. The present worth analysis (in 1989 dollars) is presented for each alternative in Table 4-10.

Rigorous sensitivity analyses demonstrating the effect of possible variations or inaccuracies in assumptions or estimates have not been performed. Only one parameter, the duration of active remedial measures, was identified as being significant with respect to sensitivity analyses. However, uncertainties in the rates of reclamation of the alternatives prevents performance of more rigorous analyses.

TABLE 4-8

CAPITAL COST COMPONENT WORKSHEET

Component Description	Alternative Number 1	Alternative Number 2	Alternative Number 3
Ground Water Collection			
Foundation Drain Sump with Pump	17,800		17,800
Withdrawal Well	5,800	5,800	5,800
2,100 If French Drain with Sumps	364,100		
2,500 If Influent/Effluent Piping and Manholes	50,000		50,000
Influent/Effluent Tanks	158,000	175,000	
Ground Water Treatment			
Building	325,000		325,000
Treatment Units	345,000		345,000
Parking Pad	4,300		4,300
Electrical	117,100		117,100
Mechanical	122,600		122,600
Instrumentation	40,500		40,500
Ground Water Isolation			
86,000 sf RCRA Cap		167,500	
19,800 sf Slurry Wall		138,600	
7,500 gal. Tank Wagon		32,000	
Subtotal:	1,470,200	343,900	1,106,100
Design at 15%	220,500	51,600	165,900
Construction Management at 5%	73,500	17,200	55,300
Contingency at 20%	294,000	68,000	221,200
TOTAL CAPITAL COST:	**$2,155,200**	**$481,500**	**$1,645,500**

TABLE 4-9

CAPITAL COST COMPONENT WORKSHEET
(DOLLAR PER YEAR)

Component Description	Alternative Number 1	Alternative Number 2	Alternative Number 3
Ground Water Collection			
1 Foundation Drain Sump with Pump	200		200
1 Well Pump	200	200	200
2 French Drain Sumps Pumps	400		
1 7,500 Gallon Tank Wagon		2,500	
Ground Water Treatment[1]			
Chemicals Replacement Parts	19,100		19,100
Power	38,600		38,600
Operation and Maintenance[2]	84,600		84,600
Monitoring[3]	72,000		72,000
Subtotal:	215,100		214,700
Contingency at 20%	43,000		43,000
TOTAL CAPITAL COST:	**$258,100**	**$2,700**	**$257,700**

[1] Based on a slow rate of 30 gpm. 8 hr/day
[2] 116 hrs/ month @ $61/hr
[3] 4 samples/month @ $1,500/sample

TABLE 4-10

SUMMARY OF ALTERNATIVE COSTS

Component Description	Alternative Number 1	Alternative Number 2	Alternative Number 3
Annual Costs	$ 258,100	$ 2,700	$ 257,700
Annual Cost x PWF*	2,433,000	26,000	2,429,000
Capital Cost	2,155,200	481,500	1,645,500
Present Worth	$4,588,200	$507,500	$4,074,500

* Present Worth Factor = 9.427 (for annual operating costs)

A discussion of benefits of individual alternatives is presented in Section 5, Summary of Alternatives.

SECTION 5.0
COMPARATIVE ANALYSIS

5.1 INTRODUCTION

This section summarizes the three screened alternatives and presents a tabular comparison of them (Table 5-1). A recommendation is made for appropriate removal action using the comparative analysis.

5.2 COMPARISON OF ALTERNATIVES

The following alternatives were retained in the screening process and evaluated in detail in Section 4.

1. Collection of ground water using a french drain and a source well, collection of footing drain flow from SWMU 107, treatment of collected water in a new treatment plant and discharge of the treated water to the South Interceptor Trench downgradient of the 881 Hillside.

2. Total encapsulation of source areas using a multi-layer cap and slurry well with control of gradients by pumping an internal sump (dewatering fluids to be treated at an existing treatment plant).

3. Collection of ground water using a source well, collection of footing drain flow from SWMU 107, treatment of collected water at a new treatment plant, and discharge of the treated water to the South Interceptor Trench downgradient of the 891 Hillside.

Alternative 1 is the most extensive interim action considered and will result in effective collection of the contaminated 881 Hillside Area ground water. The french drain will significantly reduce contaminant releases to the alluvial ground water downgradient of the 981 Hillside Area. Collection of the Building 881 footing drain flow and pumping of a new well at SWMU 119.1 will result in collection of any contaminated water from these areas. The ground-water treatment system will effectively remove both the organic and inorganic contaminants in the ground water to below the chemical-specific ARARs. Discharge of the treated water into the South Interceptor Trench allows for the water to be combined with Pond C-2 water before final discharge off-site in accordance with Rocky Flats Plant NPDES Permit.

TABLE 5-1

SUMMARY OF ALTERNATIVES

Alternatives & Present Worth	Implementability	Effectiveness	Comments
1. French Drain, Source Well, and Footing Drain with Ground-water Treatment $4,588,200	The alternative relys on proven technologies for collection and treatment of ground water. There are no site conditions that render construction difficult.	The french drain will provide positive collection of contaminated alluvial groundwater flow from the Hillside and will therefore significantly reduce contaminant release to downgradient alluvial ground water.	Complies with action and location specific ARARs, and meets or exceeds chemical specific ARAR for contaminants.
2. Total Encapsulation $507,500	The encapsulation system uses proven technology and is expected to perform well. Routine maintenance of the cover and ditches, and long-term security and monitoring are requires.	Encapsulation will minimize future contaminant releases from the SWMUs. A small quantity of contaminated ground water will be allowed to flow toward Woman Creek. The impact to downgradient alluvial water is expected to be nominal	Complies with action and location specific ARARs, and meets chemical specific ARARs with the exception of water immediately downgradient of SWMU 119.1 that will be released.
3. Source Well & Footing Drain with Ground-water Treatment $4,074,500	The alternative relys on proven technologies for groundwater treatment. Site earthwork is not required.	Pumping of a well at SWMU 119.1 and collection of footing drain flow, followed by treatment of the collected water, will result in immediate improvement of ground-water quality conditions at SWMU 119.1 and provide added protection against detectable VOC released, but this is expected to nominally impact the quality of downgradient alluvial ground water.	Does not meet chemical specific ARARs for organic contaminants but will significantly minimize future hazards to the public health.

Total encapsulation (Alternative 2) will not destroy the contaminants present, but will contain them in place. It will significantly reduce future contaminant releases from the encapsulated SWMUs. However, a small quantity of ground water with concentrations of VOCs less than 150 ug/l will be released. The portion of this water that is not consumed by evapotranspiration will ultimately reach the Woman Creek Valley Fill Alluvium and flow east toward the property boundary. It is unlikely that volatile organics will ever be detected at the boundary from this release. This alternative uses proven technology intended for much higher contamination levels than are present on the 881 Hillside. However, public reception of this may be unfavorable due to the contaminant releases to the Valley Fill Alluvium.

Collection of the footing drain flow and pumping of a new well at SWMU 119.1 with treatment of collected water (Alternative 3) is a limited-scope response that should make a significant impact on releases from the two SWMUs. However, this alternative is not as effective as Alternative 1 in capturing contaminated ground water. Although volatiles currently are not detectable in the surface waters receiving flow from the footing drain, collection and treatment of the footing drain flow will provide an extra level of assurance that significant releases will not occur in the future. Pumping the well completed in the center of SWMU 119.1 will clearly improve conditions by removing the most contaminated ground water. Continued pumping may result in complete dewatering of the colluvial materials beneath the SWMU because of limited recharge to the area. As with Alternative 1, the ground-water treatment system will effectively remove both the organic and inorganic contaminants to below the chemical-specific ARARs.

SECTION 6.0

PROPOSED IM/IRA

6.1 SUMMARY

Alternative 1 has been chosen as the proposed interim remedial action. This alternative involves construction of a french drain (trench) to intercept contaminated alluvial/colluvial ground water from the 881 Hillside Area. The drain will be located downgradicnt of the 881 Hillside SWMUs, will be keyed into bedrock in order to fully penetrate the soils, and will be 2,100 feet long.

The bedrock lithology and hydraulic conductivity will be verified before construction of the french drain begins. This verification program will consist of drilling the drain alignment on 100-foot centers (22 holes along the approximately 2,100 foot long drain). This boring program will be extended to include SWMU 119.2 to confirm the absence of a saturated colluvial zone. If saturated colluvial material is encountered, the french drain will be extended to collect ground water from the SWMU 119.2 area.

The holes will be drilled using hollow stem augers to the top of bedrock. Discrete samples will be collected every two feet for VOC analysis, and four foot composite samples will be collected for analysis of metals, inorganics and radionuclides. The proposed french drain alignment will be re-evaluated if VOCs are detected in the samples. This information will also be used to determine the final disposition of soils excavated during french drain construction. Boreholes on 100-foot centers will also be drilled along the influent and effluent piping alignment. Boreholes will be drilled to the proposed piping depth, and soils will be sampled and analyzed as above to determine the final disposition of this excavated soil.

In order to confirm the hydraulic conductivity of the bedrock material and to determine the presence of sandstone units which could adversely affect the performance of the french drain, the bedrock will be cored, using the augers as a surface casing. Penetration

of the bedrock will be sufficient (l5 feet) to find sandstone units that might subcrop between borings on 100-foot centers. This is based on the 7 degree estimated dip of the sandstone lenses (Rockwell International, 1988a). The hydraulic conductivity of the bedrock will be verified by injection tests on five foot intervals using a single packer injection apparatus as the cored hole advances.

Data collected in this program will be used to develop the detailed design of the drain. Required penetration into bedrock, and trench alignment, bottom slopes, and sump locations will be selected based on the results of volatile organic analysis, the depth to bedrock and the hydraulic conductivity of the bedrock materials. The drain will penetrate a minimum of two feet into bedrock with a hydraulic conductivity of $1x10^{-6}$ centimeters per second (cm/s) or lower. The penetration requirement may result in deeper penetration of the drain into bedrock containing sandstones and additional sumps to collect drain inflow at these and other low points.

A Job Safety Analysis (JSA) will be prepared before construction that will specify dust control measures to limit dust inhalation exposures. These measures include the premoistening of the excavation area with a sprinkler system for three days prior to start-up, and the continued moistening of the site throughout the excavation. Ambient air high volume air samplers will be used to measure radiation and wind velocity. These will be installed before commencement of construction. Operations will be suspended by requirements in the Occupational Safety Analysis (OSA) if wind velocity exceeds 15 mph or alpha radiation exceeds 0.03 pCi/m^3 as measured by a high volume sampler located immediately downgradient of the construction activities. Furthermore, construction traffic will be carefully routed to further minimize release of any plutonium contaminated dust. A Health and Safety Plan will also be prepared for construction activities that will supplement the JSA.

During construction of the french drain, the excavation will be inspected by a Colorado registered geotechnical engineer to verify and document the suitability of the materials into which the drain is keyed. Ground-water monitoring wells will be installed upgradient and

downgradient of the french drain at locations where the colluvial material is saturated or subcropping sandstones are encountered to monitor the effectiveness of the ground water collection system.

A PVC drainage pipe inside the drain will direct flow under gravity to two 3-foot diameter collection sumps. Each sump will be equipped with a submersible sump pump to deliver the water from the drain to the new treatment plant. The downstream face of the french drain will be covered with a synthetic membrane to limit flow from the clean side of the drain. The inclusion of the downstream synthetic membrane coupled with the continuity of the drain will provide positive cutoff of the ground water. The upgradient face of the french drain will be covered with a geotextile filter fabric to minimize intrusion of soils into the drain rock. The fabric pores will be of a size that prevents clogging.

Water collected from a source well at SWMU 119.1 (a new withdrawal well near well 9-74) will also be treated in the new treatment plant. In addition, a sump will be built to collect the flow from the Building 881 footing drain. Two sump pumps will be used to transfer the footing drain flow to the treatment plant in a separate piping system.

The ground water collected will be treated using a UV peroxide system (for organics removal) and an ion exchange system (for inorganics removal). A new building will be erected for enclosure of the water treatment system to protect weather or temperature sensitive components. External water pipes will be buried approximately four feet to protect against freezing.

Fire protection within the building will be provided by two wall mounted 25 pound dry chemical type fire extinguishers. The building and all treatment units are constructed of non-combustibles. Other than minimal files and records, no combustible materials will be maintained within the building. Major components of the treatment system include:

Exterior to Building

- Two 15,000-gallon influent surge tanks.
- Two 115,000-gallon effluent tanks.
- Piping.
- Associated pumps, gages, and valves.

Interior to Building

- UV/peroxide equipment.
- Ion exchange system equipment.
- Parallel system of filters.
- Sump pump.
- Associated pumps, piping, gages, and valves.
- Support equipment for treatment units, including a hydrogen peroxide supply tank and feed system for the UV/peroxide process, and chemical feed tanks for the ion exchange system.

As shown in Figure 6-1, all of the collected ground water will be pumped into the surge tanks. As the flows from the different sources are expected to vary, the surge tanks will ensure a constant flow through the treatment unit at 30 gpm, 8 hours per day. These tanks will also provide approximately two days collection potential when the treatment unit is down for repairs, cleaning, etc.

When the treatment is initiated, the water will be pumped from the surge tanks through filters to remove suspended materials. The filters will be placed in descending order of size to remove progressively smaller particulates. The water will next enter the UV/peroxide treatment unit.

The UV/peroxide treatment unit consists of an 80-gallon stainless steel oxidation chamber, which provides for a maximum ground-water retention time of 2.66 minutes at a system flowrate of 30 gpm. The oxidation chamber contains four medium pressure UV lamps, which are mounted horizontally in quartz sheaths. A hydrogen peroxide feed system is used to inject approximately 140 mg/l (50 mg/l per ppm of organic contaminants) of a 50 percent H_20_2 solution into the ground-water feed line. The ground-water/peroxide mixture then passes through an in-line static mixer before entering the bottom of the oxidation chamber.

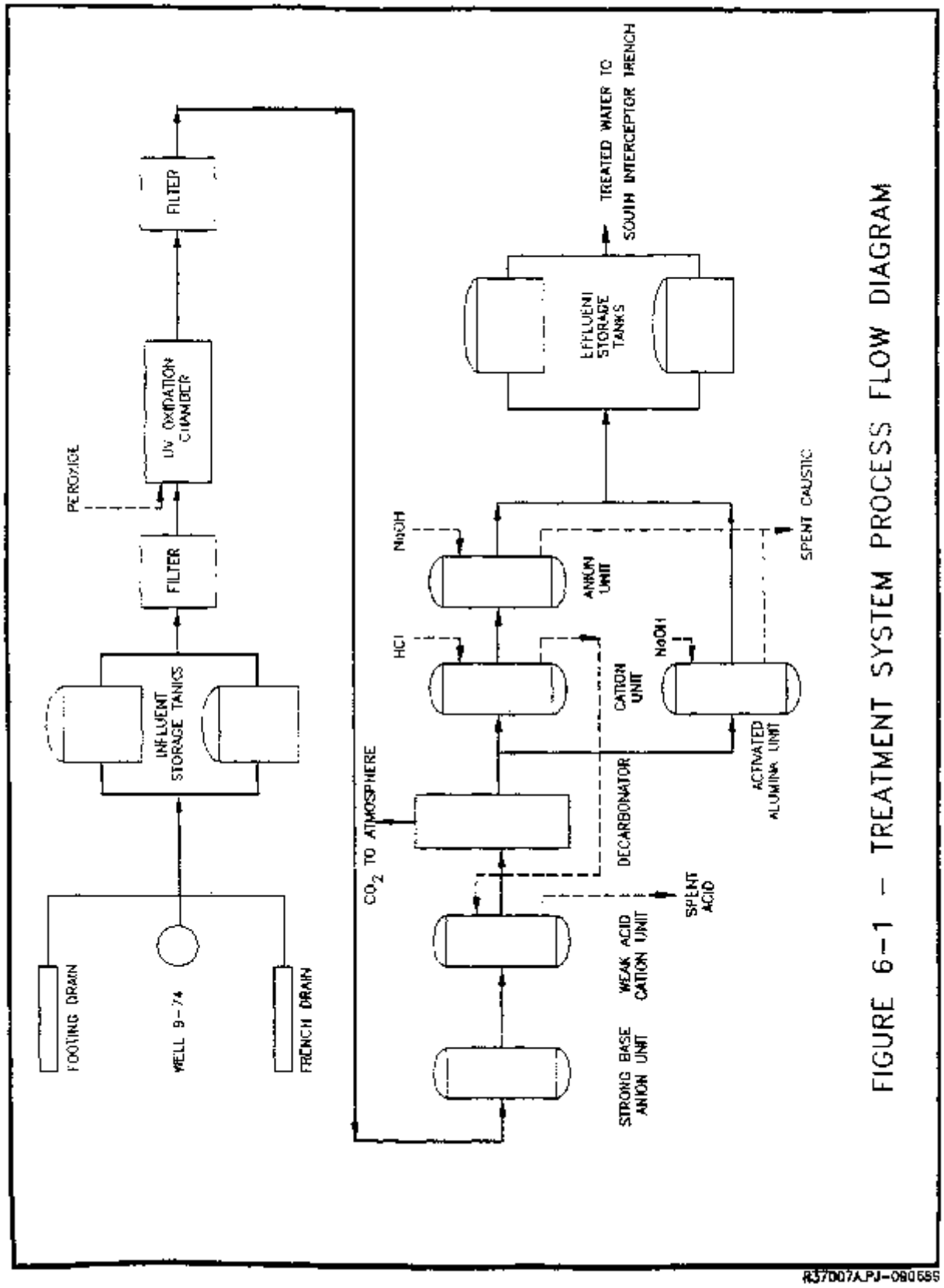

FIGURE 6-1 – TREATMENT SYSTEM PROCESS FLOW DIAGRAM

The ground water then flows through the reaction chamber, passing the UV lamps, before it exits the top of the oxidation chamber. As the ground water passes the UV lamps, the organic contaminants will be effectively destroyed to comply with chemical- specific ARARs.

The water is then sent to the ion exchange system for inorganic contaminant removal. The water first passes through a strong base anion exchanger where uranium is selectively removed, to prevent contamination of downstream treatment units. The water then passes through a weak acid cation exchanger, where heavy metals are removed. This unit also transforms the total dissolved solids (TDS) associated with carbonate hardness into carbonic acid. The carbonic acid is subsequently removed by decarbonation. Following decarbonation, the flow is split between a two-bed demineralizer for TDS removal, and an activated alumina unit for selenium removal. The effluent from these two units are blended to produce a final effluent which will meet or exceed all chemical-specific ARARs.

The ion exchange resins and activated alumina require periodic regeneration to maintain treatment effectiveness. However, the strong base anion exchanger for uranium removal will not be regenerated, but instead will be periodically disposed of as low-level radioactive waste and replaced with a new unit. Rocky Flats' potable water supply will be used to provide the water for the regeneration of all the units. The regeneration wastes will be sent to the Building 374 Process Waste Treatment System for final treatment and disposal.

Following treatment, the water will be directed to an effluent storage tank sized for one week's flow. Sufficient tankage will be provided to allow the continued operation of the treatment facility while waiting for analytical results on effluent quality prior to discharging to the South Interceptor Ditch. Effluent of unacceptable quality will be returned to the influent storage tanks for additional treatment. Effluent will always be analyzed prior to discharge.

All tanks, piping and sumps will be equipped with secondary containment to comply with 6 CCR 1007-3 and 40 CFR 264.193.

Water discharged from the treatment system will pass through Pond C-2 and eventually into Woman Creek. This discharge is monitored, according to the Rocky Flats Plant NPDES Permit which was modified on 11 July 1989 on a temporary basis by the Colorado Water Quality Control Commission. The modification calls for analysis of organic and inorganic contaminants in ground water at the RFP, which include promulgated in-stream standards for Walnut and Woman Creek.

Alternatives to direct discharge of treated effluent that were evaluated during the FS include ground-water reinjection downgradient of the french drain in the Valley Fill Alluvium, and ground-water reinjection upgradient of the 881 Hillside Area to facilitate soil washing. Ground-water reinjection for soil washing can hasten the removal of volatile organics from contaminated soils and ground water. However, the effectiveness of this technology in the clayey soils of the 881 Hillside Area is uncertain. The technology may be an appropriate addition to this remedial action in the future if cleanup is deemed to be proceeding slower than expected. The reinjection of treated ground water downgradient of the french drain is deemed not to be necessary because of the interaction between surface water and alluvial ground water.

6.2 ADDITIONAL DOCUMENTS

In addition to this IM/IRA Plan, the following documents will be prepared:

- health and safety plan for construction of the IM/IRA;
- community relations plan;
- detailed design plans and specifications;
- detailed "as-built" drawings incorporating all field changes to accurately reflect the constructed ground water collection and treatment system; and
- an operation and maintenance manual for the IM/IRA.

SECTION 7.0
REFERENCES

DRCOG, 1989. "DRCOG makes 1989 Estimates of Metro Population and Households". Denver Regional Council of Governments, September 1989.

U.S. EPA, 1983. Treatability Manual, Volume IV: Cost Estimating.

U.S. EPA, 1985. Compendium of Remedial Technologies at Hazardous Waste Sites.

R. S. Means Co., 1987. Building Construction Data.

Rockwell International, 1988a. Draft Final Remedial Investigation Report for High Priority Sites (881 Hillside Area), March 1988.

Rockwell International, 1988b. Draft Feasibility Study Report for High Priority Sites (881 Hillside Area), March 1988.

Rockwell International, 1989. 881 Hillside Remedial Investigation and Feasibility Study Responses to EPA Comments, February 1999.

INTERIM MEASURES/INTERIM REMEDIAL ACTION PLAN AND DECISION DOCUMENT

881 HILLSIDE AREA OPERABLE UNIT NO. 1

U.S. DEPARTMENT OF ENERGY
Rocky Flats Plant
Golden, Colorado

JANUARY, 1990

VOLUME II - Appendix

FINAL

Volume II

Appendix

SECTION 1 Volatile Organic Compound, Dissolved Metals, Inorganic Compound, and Radiochemistry Analytical Results for Alluvial Wells at the 881 Hillside

Wells/Stations in this group: 09-74, 10-74, 01-87, 04-87, 06-87, 43-87, 44-87, 49-87, 50-87, 51-87, 52-87, 53-87, 54-87.

SECTION 2 Volatile Organic Compound, Dissolved Metals, Inorganic Compound, and Radiochemistry Analytical Results for the Building 881 Footing Drain Discharge

Wells/Stations in this group: SW-45.

SECTION 3 Volatile Organic Compound Dissolved Metals, Inorganic Compound, and Radiochemistry Analytical Results for Alluvial Wells Downgradient of the 881 Hillside

Wells/Stations in this group: 64-86, 65-86, 66-86, 69-86, 02-87, 47-87, 48-87, 55-87.

SECTION 1

VOLATILE ORGANIC COMPOUND, DISSOLVED METALS, INORGANIC COMPOUND, AND RADIOCHEMISTRY ANALYTICAL RESULTS

FOR ALLUVIAL WELLS AT THE 881 HILLSIDE

WELL/STATIONS IN THIS GROUP:

09-74
10-74
01-87
04-87
06-87
43-87
44-87
49-87
50-87
51-87
52-87
53-87
54-87

ALLUVIAL WELLS AT THE 881 HILLSIDE
VOLATILE ORGANIC RESULTS

Groundwater Volatile Organic Results

For Wells at Rockwell (Rocky Flats)

ALLUVIAL WELLS AT THE 881 HILLSIDE

Well Number	Date Sampled	Qtr.	Chloro methane ug/l	Bromo methane ug/l	Vinyl Chloride ug/l	Chloro ethane ug/l	Methylene Chloride ug/l	Acetone ug/l	Carbon Disulfide ug/l
09-74	03/09/87	1	NR	NR	NR	NR	NR	NR	NR
09-74	04/09/87	1	NR	NR	NR	NR	NR	NR	NR
09-74	05/21/87	2	NR	NR	NR	NR	NR	NR	NR
09-74	07/02/87	3	NR	NR	NR	NR	NR	NR	NR
09-74	08/11/87	3	DRY						
09-74	10/28/87	4	NR	NR	NR	NR	NR	NR	NR
09-74	10/28/87	4	10U	10U	10U	10U	1. J	7. JB	5U
09/74	11/17/87	4	10 U	10 U	10 U	10 U	48	10 U	5 U
09-74	02/25/88	1	10 U	10 U	10 U	10 U	5 U	10 U	5 U
09-74	04/14/88	2	10 U	10 U	10 U	10 U	5 U	9 J	5 U
09-74	04/15/88	2	10 U	10 U	10 U	10 U	5 U	10 U	5 U
09-74	07/20/88	3	10 U	10 U	10 U	10 U	5 U	10 U	5 U
09-74	10/25/88	4	10 U	10 U	10 U	10 U	23	10 U	5 U
09-74	01/25/89	1	10 U	10 U	10U R	10 U	5 U	10 U	5 U
09-74	04/24/89	2	10 U	10 U	10 U	10 U	5 J	10U R	5 U
09-74	05/15/89		Data not yet received						
09-74	05/15/89		Data not yet received						
09-74	05/15/89		INSUFFICIENT SAMPLE FOR VOLATILE ORGANIC ANALYSIS						
09-74	05/16/89		Data not yet received						
09-74	08/22/89		Data not yet received						
09-74	08/22/89		Data not yet received						

NR = Analyte not reported
J = Present below detection limit
U = Analyzed but not detected
B = Present in laboratory blank
* = Holding time not met
N = Batch spike not in 80-120% range
E = Estimated value
R = Data rejected during validation.

Groundwater Volatile Organic Results

For Wells at Rockwell (Rocky Flats)

ALLUVIAL WELLS AT THE 881 HILLSIDE

Well Number	Date Sampled	Qtr.	1,1-Di-chloro ethane ug/l	1,1-Di-chloro ethane ug/l	Trans-1,2-Dichloro ehene ug/l	Chloroform ug/l	1,2-Di-chloro ethane ug/l	2-Butanone ug/l	1,1,1-Tri chloro ethane ug/l
09-74	03/09/87	1	12400	NR	NR	4 U	75	NR	13800
09-74	04/09/87	1	9600	NR	NR	4 U	126	NR	12600
09-74	05/21/98	2	48000	NR	NR	4 U	16000	NR	4 U
09-74	07/02/87	3	703	NR	NR	4 U	5262	NR	20285
09-74	08/11/87	3	DRY						
09-74	10/20/87	4	28530	NR	NR	5 U	34	NR	30250
09-74	10/28/87	4	5 U	5U	5U	5U	5U	10U	5 U
09/74	11/17/87	4	23056	54	NR	5 U	4J	10 U	21692
09-74	02/25/88	1	4470	15	NR	5 U	15	10 U	3020
09-74	04/14/88	2	3820	5 U	NR	5 U	5 U	10 U	3130
09-74	04/15/88	2	3390	5 U	NR	5 U	5 U	10 U	3110
09-74	07/20/88	3	3380	5 U	NR	5 U	5 U	10 U	5 U
09-74	10/25/88	4	4800	23	NR	4 JB	5 U	10 U	8200
09-74	01/25/89	1	5300	180 J	NR	5 U	17 J	10U R	10000
09-74	04/24/89	2	6600 J	14 J	NR	5 U	17 J	10 U	5700 J
09-74	05/15/89		Data not yet received						
09-74	05/15/89		Data not yet received						
09-74	05/15/89		INSUFFICIENT SAMPLE FOR VOLATILE ORGANIC ANALYSIS						
09-74	05/16/89		Data not yet received						
09-74	08/22/89		Data not yet received						
09-74	08/22/89		Data not yet received						

NR = Analyte not reported
J = Present below detection limit
U = Analyzed but not detected
B = Present in laboratory blank
* = Holding time not met
N = Batch spike not in 80-120% range
E = Estimated value
R = Data rejected during validation.

Groundwater Volatile Organic Results

For Wells at Rockwell (Rocky Flats)

ALLUVIAL WELLS AT THE 881 HILLSIDE

Well Number	Date Sampled	Qtr.	Carbon Tetra chloride ug/l	Vinyl Acetate ug/l	Brono dichloro methane ug/l	1,2-Di-chloro propane ug/l	Cis-1,3-Dichloro propene ug/l	Trichloro ethene ug/l	Dibrono chloro methane ug/l
09-74	03/09/87	1	4 U	NR	NR	NR	NR	20000	NR
09-74	04/09/87	1	4 U	NR	NR	NR	NR	20800	NR
09-74	05/21/87	2	28000	NR	NR	NR	NR	72000	NR
09-74	07/02/87	3	4 U	NR	NR	NR	NR	11768	NR
09-74	08/11/87	3	DRY						
09-74	10/20/87	4	5 U	NR	NR	NR	NR	12760	NR
09-74	10/28/87	4	5U	10U	5U	5U	5U	24. B	5U
09/74	11/17/87	4	3522	10 U	5 U	5 U	5 U	17538	5 U
09-74	02/25/88	1	990	10 U	5 U	*5 U	5 U	6810	5 U
09-74	04/14/88	2	1200	10 U	5 U	5 U	5 U	5840	5 U
09-74	04/15/88	2	1140	10 U	5 U	5 U	5 U	5860	5 U
09-74	07/20/88	3	5 U	10 U	5 U	5 U	5 U	4380	
09-74	10/25/88	4	5 U	10 U	5 U	5 U	5 U	9500	
09-74	01/25/89	1	5 U	10 U	5 U	5 U	5 U	79	
09-74	04/24/89	2	5 U	10U R	5 U	5 U	5 U	6	
09-74	05/15/89		Data not yet received						
09-74	05/15/89		Data not yet received						
09-74	05/15/89		INSUFFICIENT SAMPLE FOR VOLATILE ORGANIC ANALYSIS						
09-74	05/16/89		Data not yet received						
09-74	08/22/89		Data not yet received						
09-74	08/22/89		Data not yet received						

NR = Analyte not reported
J = Present below detection limit
U = Analyzed but not detected
B = Present in laboratory blank
* = Holding time not met
N = Batch spike not in 80-120% range
E = Estimated value
R = Data rejected during validation.

Groundwater Volatile Organic Results

For Wells at Rockwell (Rocky Flats)

ALLUVIAL WELLS AT THE 881 HILLSIDE

Well Number	Date Sampled	Qtr.	1,1,2-Tri chloro ethane ug/l	Benzene ug/l	Trans-1,3-Dichloro propene ug/l	2-Chloro ethylvinyl ether ug/l	Bromoform ug/l	4-Methyl-2-penta none ug/l	2-Hexanone ug/l
09-74	03/09/87	1	96	NR	NR	NR	NR	NR	NR
09-74	04/09/87	1	4 U	NR	NR	NR	NR	NR	NR
09-74	05/21/87	2	4 U	NR	NR	NR	NR	NR	NR
09-74	07/02/87	3	4 U	NR	NR	NR	NR	NR	NR
09-74	08/11/87	3	DRY						
09-74	10/20/87	4	5 U	NR	NR	NR	NR	NR	NR
09-74	10/28/87	4	5U	5U	5U	10U	5U	10U	10U
09/74	11/17/87	4	139	5 U	5 U	NR	5 U	10 U	10 U
09-74	02/25/88	1	5 U	5 U	5 U	10 U	5 U	10 U	10 U
09-74	04/14/88	2	14740	5 U	5 U	10 U	5 U	10 U	10 U
09-74	04/15/88	2	14190	5 U	5 U	10 U	5 U	10 U	10 U
09-74	07/20/88	3	5 U	5 U	5 U	10 U	5 U	10 U	10 U
09-74	10/25/88	4	73	5 U	5 U	10 U	5 U	10 U	10 U
09-74	01/25/89	1	39 J	5 U	5 U	NR	5 U	10 U	10 U
09-74	04/24/89	2	47 J	5 U	5 U	NR	5 U	10 U	10 U
09-74	05/15/89		Data not yet received						
09-74	05/15/89		Data not yet received						
09-74	05/15/89		INSUFFICIENT SAMPLE FOR VOLATILE ORGANIC ANALYSIS						
09-74	05/16/89		Data not yet received						
09-74	08/22/89		Data not yet received						
09-74	08/22/89		Data not yet received						

NR = Analyte not reported
J = Present below detection limit
U = Analyzed but not detected
B = Present in laboratory blank
* = Holding time not met
N = Batch spike not in 80-120% range
E = Estimated value
R = Data rejected during validation.

Groundwater Volatile Organic Results

For Wells at Rockwell (Rocky Flats)

ALLUVIAL WELLS AT THE 881 HILLSIDE

Well Number	Date Sampled	Qtr.	Tetra chloro ethene ug/l	1,1,2,2-Tetrachloro ethane ug/l	Toluene ug/l	Chloro benzene ug/l	Ethyl benzene ug/l	Styrene ug/l	Total Xylenes ug/l
09-74	03/09/87	1	6400	NR	NR	NR	NR	NR	NR
09-74	04/09/87	1	2400	NR	NR	NR	NR	NR	NR
09-74	05/21/87	2	13200	NR	NR	NR	NR	NR	NR
09-74	07/02/87	3	3393	NR	NR	NR	NR	NR	NR
09-74	08/11/87	3	DRY						
09-74	10/20/87	4	5840	NR	NR	NR	NR	NR	NR
09-74	10/28/87	4	5U	5U	5 U	5U	5U	5U	5U
09/74	11/17/87	4	6322	5 U	19	5 U	5 U	5 U	5 U
09-74	02/25/88	1	1800	5 U	5 U	5 U	5 U	5 U	5 U
09-74	04/14/88	2	1940	5 U	5 U	5 U	5 U	5 U	5 U
09-74	04/15/88	2	1920	5 U	5 U	5 U	5 U	5 U	5 U
09-74	07/20/88	3	1180	5 U	5 U	5 U	5 U	5 U	5 U
09-74	10/25/88	4	2500	5 U	2 J	5 U	5 U	5 U	5 U
09-74	01/25/89	1	780E	5 U	5 U	5 U	5 U	5 U	5 U
09-74	04/24/89	2	2800 J	5 U	5 J	5 U	5 U	5 U	5 U
09-74	05/15/89		Data not yet received						
09-74	05/15/89		Data not yet received						
09-74	05/15/89		INSUFFICIENT SAMPLE FOR VOLATILE ORGANIC ANALYSIS						
09-74	05/16/89		Data not yet received						
09-74	08/22/89		Data not yet received						
09-74	08/22/89		Data not yet received						

NR = Analyte not reported
J = Present below detection limit
U = Analyzed but not detected
B = Present in laboratory blank
* = Holding time not met
N = Batch spike not in 80-120% range
E = Estimated value
R = Data rejected during validation.

Groundwater Volatile Organic Results

For Wells at Rockwell (Rocky Flats)

ALLUVIAL WELLS AT THE 881 HILLSIDE

Well Number	Date Sampled	Qtr.	Chloro methane ug/l	Bromo methane ug/l	Vinyl Chloride ug/l	Chloro ethane ug/l	Methylene Chloride ug/l	Acetone ug/l	Carbon Disulfide ug/l
10-74	05/21/87	2	NR	NR	NR	NR	NR	NR	NR
10-74	07/01/87	3	DRY						
10-74	10/20/87	4	NR	NR	NR	NR	NR	NR	NR
10-74	10/20/87	4	100U	100U	100U	100 U	10. J	120. B	50U
10-74	02/25/88	1	10 U	10 U	10 U	10 U	5 U	10 U	5 U
10-74	07/19/88	3	10 U	10 U	10 U	10 U	5 U	10 U	5 U
10-74	10/25/88	4	10 U	10 U	10 U	10 U	5 U	10 U	5 U
10-74	01/16/89	1	10U R	10U R	10 U	10 U	6 U	10 U	5 U
10-74	04/24/89	2	10 U	10 U	10 U	10 U	5 J	10U R	5 U
10-74	06/09/89		Data not yet received						
10-74	06/09/89		Data not yet received						
10-74	06/10/89		INSUFFICIENT SAMPLE FOR VOLATILE ORGANIC ANALYSIS						
10-74	06/12/89		Data not yet received						
10-74	08/23/89		Data not yet received						
10-74	08/23/89		Data not yet received						
01-87	10/12/87	4	DRY						
01-87	02/10/88	1	10 U	10 U	10 U	10 U	5 U	10 U	5 U
01-87	04/11/88	1	DRY						

NR = Analyte not reported
J = Present below detection limit
U = Analyzed but not detected
B = Present in laboratory blank
* = Holding time not met
N = Batch spike not in 80-120% range
E = Estimated value
R = Data rejected during validation.

Groundwater Volatile Organic Results

For Wells at Rockwell (Rocky Flats)

ALLUVIAL WELLS AT THE 881 HILLSIDE

Well Number	Date Sampled	Qtr.	1,1-Di-chloro ethene ug/l	1,1-Di-chloro ethane ug/l	Trans-1,2-Dichloro ethene ug/l	Chloroform ug/l	1,2-Di-chloro ethane ug/l	2-Butanone ug/l	1,1,1-Tri chloro ethane ug/l
10-74	05/21/87	2	4 U	NR	NR	4 U	140	NR	4 U
10-74	07/01/87	3	DRY						
10-74	10/20/87	4	5 U	NR	NR	30	5 U	NR	5 U
10-74	10/20/87	4	50U	50U	50U	32. J	50 U	100U	50U
10-74	02/25/88	1	5 U	5 U	NR	42	5 U	10 U	312
10-74	07/19/88	3	5 U	5 U	NR	51	5 U	10 U	5 U
10-74	10/25/88	4	5 U	5 U	NR	30 B	5 U	10 U	5 U
10-74	01/16/89	1	5 U	5 U	NR	22 U	5 U	10U R	5 U
10-74	04/24/89	2	5 U	5 U	NR	5 U	5 U	10 U	8 J
10-74	06/09/89		Data not yet received						
10-74	06/09/89		Data not yet received						
10-74	06/10/89		INSUFFICIENT SAMPLE FOR VOLATILE ORGANIC ANALYSIS						
10-74	06/12/89		Data not yet received						
10-74	08/23/89		Data not yet received						
10-74	08/23/89		Data not yet received						
01-87	10/12/87	4	DR Y						
01-87	02/10/88	1	5 U	5 U	NR	5 U	5 U	10 U	5 U
01-87	04/11/88	1	DRY						

NR = Analyte not reported
J = Present below detection limit
U = Analyzed but not detected
B = Present in laboratory blank
* = Holding time not met
N = Batch spike not in 80-120% range
E = Estimated value
R = Data rejected during validation.

Groundwater Volatile Organic Results

For Wells at Rockwell (Rocky Flats)

ALLUVIAL WELLS AT THE 881 HILLSIDE

Well Number	Date Sampled	Qtr.	Carbon Tetra chloride ug/l	Vinyl Acetate ug/l	Bromo dichloro methane ug/l	1,2-Di-chloro propane ug/l	Cis-1,3-Dichloro propene ug/l	Trichloro ethene ug/l	Dibromo chloro methane ug/l
10-74	05/21/87	2	1400	NR	NR	NR	NR	3600	NR
10-74	07/01/87	3	DRY						
10-74	10/20/87	4	441	NR	NR	NR	NR	258	NR
10-74	10/20/87	4	50 U	100U	50U	50U	50U	580. B	50U
10-74	02/25/88	1	1219	10 U	5 U	5 U	5 U	625	5 U
10-74	07/19/88	3	3370	10 U	5 U	5 U	5 U	850	5 U
10-74	10/25/88	4	1600	10 U	5 U	5 U	5 U	600	5 U
10-74	01/16/89	1	660E U	10 U	5 U	5 U	5 U	410E U	5 U
10-74	04/24/89	2	2400 J	10U R	5 U	5 U	5 U	1200 J	5 U
10-74	06/09/89		Data not yet received						
10-74	06/09/89		Data not yet received						
10-74	06/10/89		INSUFFICIENT SAMPLE FOR VOLATILE ORGANIC ANALYSIS						
10-74	06/12/89		Data not yet received						
10-74	08/23/89		Data not yet received						
10-74	08/23/89		Data not yet received						
01-87	10/12/87	4	DRY						
01-87	02/10/88	1	5 U	10 U	5 U	5 U	5 U	5 U	5 U
01-87	04/11/88	1	DRY						

NR = Analyte not reported
J = Present below detection limit
U = Analyzed but not detected
B = Present in laboratory blank
* = Holding time not met
N = Batch spike not in 80-120% range
E = Estimated value
R = Data rejected during validation.

Groundwater Volatile Organic Results

For Wells at Rockwell (Rocky Flats)

ALLUVIAL WELLS AT THE 881 HILLSIDE

Well Number	Date Sampled	Qtr.	1,1,2-Tri-chloro ethane ug/l	Benzene ug/l	Trans-1,3-Dichloro propene ug/l	2-Chloro ethylvinyl ether ug/l	Bromoform ug/l	4-Methyl-2-penta none ug/l	2-Hexanone ug/l
10-74	05/21/87	2	4 U	NR	NR	NR	NR	NR	NR
10-74	07/01/87	3	DRY						
10-74	10/20/87	4	5 U	NR	NR	NR	NR	NR	NR
10-74	10/20/87	4	50U	50U	50U	100U	50U	100U	100U
10-74	02/25/88	1	5 U	5 U	5 U	10 U	5 U	10 U	10 U
10-74	07/19/88	3	5 U	5 U	5 U	10 U	5 U	10 U	10 U
10-74	10/25/88	4	5 U	5 U	5 U	10 U	5 U	10 U	10 U
10-74	01/16/89	1	5 U	5 U	5 U	NR	5 U	10 U	10 U
10-74	04/24/89	2	5 U	5 U	5 U	NR	5 U	10 U	10 U
10-74	06/09/89		Data not yet received						
10-74	06/09/89		Data not yet received						
10-74	06/10/89		INSUFFICIENT SAMPLE FOR VOLATILE ORGANIC ANALYSIS						
10-74	06/12/89		Data not yet received						
10-74	08/23/89		Data not yet received						
10-74	08/23/89		Data not yet received						
01-87	10/12/87	4	DRY						
01-87	02/10/88	1	5 U	5 U	5 U	10 U	5 U	10 U	10 U
01-87	04/11/88	1	DRY						

NR = Analyte not reported
J = Present below detection limit
U = Analyzed but not detected
B = Present in laboratory blank
* = Holding time not met
N = Batch spike not in 80-120% range
E = Estimated value
R = Data rejected during validation.

Groundwater Volatile Organic Results

For Wells at Rockwell (Rocky Flats)

ALLUVIAL WELLS AT THE 881 HILLSIDE

Well Number	Date Sampled	Qtr.	Tetra chloro ethene ug/l	1,1,2,2-Tetrachloro ethane ug/l	Toluene ug/l	Chloro benzene ug/l	Ethyl benzene ug/l	Styrene ug/l	Total Xylenes ug/l
10-74	05/21/87	2	4 U	NR	NR	NR	NR	NR	NR
10-74	07/01/87	3	DRY						
10-74	10/20/87	4	5 U	NR	NR	NR	NR	NR	NR
10-74	10/20/87	4	50U	50U	50U	50U	50U	50U	50U
10-74	02/25/88	1	17	5 U	5 U	5 U	5 U	5 U	5 U
10-74	07/19/88	3	5 U	5 U	5 U	5 U	5 U	5 U	5 U
10-74	10/25/88	4	5 U	5 U	5 U	5 U	5 U	5 U	5 U
10-74	01/16/89	1	2 J	5 U	5 U	5 U	5 U	5 U	5 U
10-74	04/24/89	2	17 J	5 U	5 J	5 U	5 U	5 U	5 U
10-74	06/09/89		Data not yet received						
10-74	06/09/89		Data not yet received						
10-74	06/10/89		INSUFFICIENT SAMPLE FOR VOLATILE ORGANIC ANALYSIS						
10-74	06/12/89		Data not yet received						
10-74	08/23/89		Data not yet received						
10-74	08/23/89		Data not yet received						
01-87	10/12/87	4	DRY						
01-87	02/10/88	1	5 U	5 U	5 U	5 U	5 U	5 U	5 U
01-87	04/11/88	1	DRY						

NR = Analyte not reported
J = Present below detection limit
U = Analyzed but not detected
B = Present in laboratory blank
* = Holding time not met
N = Batch spike not in 80-120% range
E = Estimated value
R = Data rejected during validation.

Groundwater Volatile Organic Results

For Wells at Rockwell (Rocky Flats)

ALLUVIAL WELLS AT THE 881 HILLSIDE

Well Number	Date Sampled	Qtr.	Chloro methane ug/l	Bromo methane ug/l	Vinyl Chloride ug/l	Chloro ethane ug/l	Methylene Chloride ug/l	Acetone ug/l	Carbon Disulfide ug/l
01-87	04/11/88	2	DRY						
01-87	07/20/88	3	10 U	10 U	10 U	10 U	5 U	10 U	5 U
01-87	10/26/88	4	10 U	10 U	10 U	10 U	5 U	10 U	5 U
01-87	06/06/89		Data not yet received						
01-87	08/17/89		Data not yet received						
04-87	05/20/87	1	NR	NR	NR	NR	NR	NR	NR
04-87	05/26/87	2	10U	10U	10U	10U	15 B	4 J	5U
04-87	07/09/87	3	NR	NR	NR	NR	NR	NR	NR
04-87	10/14/87	4	NR	NR	NR	NR	NR	NR	NR
04-87	10/14/87	4	INSUFFICIENT SAMPLE FOR VOLATILE ORGANIC ANALYSIS						
04-87	02/15/88	1	10 U	10 U	10 U	10 U	5 U	10 U	5 U
04-87	04/13/88	2	10 U	10 U	10 U	10 U	5 U	10 U	5 U
04-87	07/14/88	3	10 U	10 U	10 U	10 U	5 U	10 U	5 U
04-87	10/20/88	4	10 U	10 U	10 U	10 U	5 U	10 U	5 U
04-87	01/12/89	1	10U R	10U R	10 U	10U R	5 U	10 U	5 U
04-87	04/17/89	2	10 U	10 U	10 U	10 U	5 U	10 U	10 U
04-87	06/09/89		Data not yet received						
04-87	06/09/89		Data not yet received						

NR = Analyte not reported
J = Present below detection limit
U = Analyzed but not detected
B = Present in laboratory blank
* = Holding time not met
N = Batch spike not in 80-120% range
E = Estimated value
R = Data rejected during validation.

Groundwater Volatile Organic Results

For Wells at Rockwell (Rocky Flats)

ALLUVIAL WELLS AT THE 881 HILLSIDE

Well Number	Date Sampled	Qtr.	1,1-Di-chloro ethene ug/l	1,1-Di-chloro ethane ug/l	Trans-1,2-Dichloro ethene ug/l	Chloroform ug/l	1,2-Di-chloro ethane ug/l	2-Butanone ug/l	1,1,1-Tri chloro ethane ug/l
01-87	04/11/88	2	DRY						
01-87	07/20/88	3	5 U	5 U	NR	5 U	5 U	10 U	5 U
01-87	10/26/88	4	5 U	5 U	NR	5 U	5 U	10 U	5 U
01-87	06/06/89		Data not yet received						
01-87	08/17/89		Data not yet received						
04-87	05/20/87	1	8	NR	NR	4 U	32	NR	4 U
04-87	05/26/87	2	3 J	5U	5U	6	5U	10U	5
04-87	07/09/87	3	4 U	NR	NR	4 U	4 U	NR	4 U
04-87	10/14/87	4	5 U	NR	NR	5 U	5 U	NR	5 U
04-87	10/14/87	4	INSUFFICIENT SAMPLE FOR VOLATILE ORGANIC ANALYSIS						
04-87	02/15/88	1	5 U	5 U	NR	5 U	5 U	10 U	11
04-87	04/13/88	2	3 J	5 U	NR	5 U	5 U	10 U	20
04-87	07/14/88	3	5 U	5 U	NR	5 U	5 U	10 U	5 U
04-87	10/20/88	4	5 U	5 U	NR	5 U	5 U	10 U	5 U
04-87	01/12/89	1	5 U	5 U	NR	5 U	5 U	10U R	5 U
04-87	04/17/89	2	5 U	5 U	NR	5 U	5 U	10 U	5 U
04-87	06/09/89		Data not yet received						
04-87	06/09/89		Data not yet received						

NR = Analyte not reported
J = Present below detection limit
U = Analyzed but not detected
B = Present in laboratory blank
* = Holding time not met
N = Batch spike not in 80-120% range
E = Estimated value
R = Data rejected during validation.

Groundwater Volatile Organic Results

For Wells at Rockwell (Rocky Flats)

ALLUVIAL WELLS AT THE 881 HILLSIDE

Well Number	Date Sampled	Qtr.	Carbon Tetra chloride ug/l	Vinyl Acetate ug/l	Bromo dichloro methane ug/l	1,2-Di-chloro propane ug/l	Cis-1,3-Dichloro propene ug/l	Trichloro ethene ug/l	Dibromo chloro methane ug/l
01-87	04/11/88	2	DRY						
01-87	07/20/88	3	5 U	10 U	5 U	5 U	5 U	5 U	5 U
01-87	10/26/88	4	5 U	10 U	5 U	5 U	5 U	5 U	5 U
01-87	06/06/89		Data not yet received						
01-87	08/17/89		Data not yet received						
04-87	05/20/87	1	5	NR	NR	NR	NR	525	NR
04-87	05/26/87	2	21	10U	5U	5U	5U	230	5U
04-87	07/09/87	3	4 U	NR	NR	NR	NR	23	NR
04-87	10/14/87	4	10	NR	NR	NR	NR	44	NR
04-87	10/14/87	4	INSUFFICIENT SAMPLE FOR VOLATILE ORGANIC ANALYSIS						
04-87	02/15/88	1	5 U	10 U	5 U	5 U	5 U	32	5 U
04-87	04/13/88	2	5 U	10 U	5 U	5 U	5 U	37	5 U
04-87	07/14/88	3	5 U	10 U	5 U	5 U	5 U	26	5 U
04-87	10/20/88	4	5 U	10 U	5 U	5 U	5 U	56	5 U
04-87	01/12/89	1	11 J	10 U	5 U	5 U	5 U	99	5 U
04-87	04/17/89	2	5 U	10U R	5 U	5 U	5 U	110 J	5 U
04-87	06/09/89		Data not yet received						
04-87	06/09/89		Data not yet received						

NR = Analyte not reported
J = Present below detection limit
U = Analyzed but not detected
B = Present in laboratory blank
* = Holding time not met
N = Batch spike not in 80-120% range
E = Estimated value
R = Data rejected during validation.

Groundwater Volatile Organic Results

For Wells at Rockwell (Rocky Flats)

ALLUVIAL WELLS AT THE 881 HILLSIDE

Well Number	Date Sampled	Qtr.	1,1,2-Tri chloro ethane ug/l	Benzene ug/l	Trans-1,3-Dichloro propene ug/l	2-Chloro ethylvinyl ether ug/l	Bromoform ug/l	4-Methyl-2-penta none ug/l	2-Hexanone ug/l
01-87	04/11/88	2	DRY						
01-87	07/20/88	3	5 U	5 U	5 U	10 U	5 U	10 U	10 U
01-87	10/26/88	4	5 U	5 U	5 U	10 U	5 U	10 U	10 U
01-87	06/06/89		Data not yet received						
01-87	08/17/89		Data not yet received						
04-87	05/20/87	1	4 U	NR	NR	NR	NR	NR	NR
04-87	05/26/87	2	5U	5U	5U	10U	5U	10U	10U
04-87	07/09/87	3	4 U	NR	NR	NR	NR	NR	NR
04-87	10/14/87	4	5 U	NR	NR	NR	NR	NR	NR
04-87	10/14/87	4	INSUFFICIENT SAMPLE FOR VOLATILE ORGANIC ANALYSIS						
04-87	02/15/88	1	5 U	5 U	5 U	10 U	5 U	10 U	10 U
04-87	04/13/88	2	5 U	5 U	5 U	10 U	5 U	10 U	10 U
04-87	07/14/88	3	5 U	5 U	5 U	10 U	5 U	10 U	10 U
04-87	10/20/88	4	5 U	5 U	5 U	10 U	5 U	10 U	10 U
04-87	01/12/89	1	5 U	5 U	5 U	NR	5 U	10 U	10 U
04-87	04/17/89	2	5 U	5 U	5 U	NR	5 U	10 U	10 U
04-87	06/09/89		Data not yet received						
04-87	06/09/89		Data not yet received						

NR = Analyte not reported
J = Present below detection limit
U = Analyzed but not detected
B = Present in laboratory blank
* = Holding time not met
N = Batch spike not in 80-120% range
E = Estimated value
R = Data rejected during validation.

Groundwater Volatile Organic Results

For Wells at Rockwell (Rocky Flats)

ALLUVIAL WELLS AT THE 881 HILLSIDE

Well Number	Date Sampled	Qtr.	Tetra chloro ethene ug/l	1,1,2,2-Tetrachloro ethane ug/l	Toluene ug/l	Chloro benzene ug/l	Ethyl benzene ug/l	Styrene ug/l	Total Xylenes ug/l
01-87	04/11/88	2	DRY						
01-87	07/20/88	3	5 U	5 U	5 U	5 U	5 U	5 U	5 U
01-87	10/26/88	4	5 U	5 U	5 U	5 U	5 U	5 U	5 U
01-87	06/06/89		Data not yet received						
01-87	08/17/89		Data not yet received						
04-87	05/20/87	1	84	NR	NR	NR	NR	NR	NR
04-87	05/26/87	2	14	5U	5U	5U	5U	5U	5U
04-87	07/09/87	3	4 U	NR	NR	NR	NR	NR	NR
04-87	10/14/87	4	6	NR	NR	NR	NR	NR	NR
04-87	10/14/87	4	INSUFFICIENT SAMPLE FOR VOLATILE ORGANIC ANALYSIS						
04-87	02/15/88	1	5 U	5 U	5 U	5 U	5 U	5 U	5 U
04-87	04/13/88	2	12	5 U	5 U	5 U	5 U	5 U	5 U
04-87	07/14/88	3	5 U	5 U	5 U	5 U	5 U	5 U	5 U
04-87	10/20/88	4	3 J	5 U	5 U	5 U	5 U	5 U	5 U
04-87	01/12/89	1	5 U	5 U	5 U	5 U	5 U	5 U	5 U
04-87	04/17/89	2	6 J	5 U	5 U	5 U	5 U	5 U	5 U
04-87	06/09/89		Data not yet received						
04-87	06/09/89		Data not yet received						

NR = Analyte not reported
J = Present below detection limit
U = Analyzed but not detected
B = Present in laboratory blank
* = Holding time not met
N = Batch spike not in 80-120% range
E = Estimated value
R = Data rejected during validation.

Groundwater Volatile Organic Results

For Wells at Rockwell (Rocky Flats)

ALLUVIAL WELLS AT THE 881 HILLSIDE

Well Number	Date Sampled	Qtr.	Chloro methane ug/l	Bromo methane ug/l	Vinyl Chloride ug/l	Chloro ethane ug/l	Methylene Chloride ug/l	Acetone ug/l	Carbon Disulfide ug/l
04-87	06/10/89		INSUFFICIENT SAMPLE FOR VOLATILE ORGANIC ANALYSIS						
04-87	06/12/89		Data not yet received						
04-87	07/26/89		Data not yet received						
06-87	07/30/87	3	NF	NF	NF	NF	NF	NF	NF
06-87	08/25/87	3	NR	NR	NR	NR	NR	NR	NR
06-87	10/14/87	4	NR	NR	NR	NR	NR	NR	NR
06-87	10/14/87	4	10U	10U	10U	10U	3 JB	4JB	5U
06-87	02/17/88	1	10 U	10 U	10 U	10 U	5 U	10 U	5 U
06-87	04/13/88	2	10 U	10 U	10 U	10 U	5 U	10 U	5 U
06-87	07/14/88	3	10 U	10 U	10 U	10 U	5 U	10 U	5 U
06-87	10/26/88	4	DRY						
06-87	04/17/89	2	10 U	10 U	10 U	10 U	5 U	10U R	5 U
06-87	06/10/89		Data not yet received						
06-87	07/26/89		Data not yet received						
43-87	12/18/87	4	10 U	10 U	10 U	10 U	36	9J	5 U
43-87	02/22/88	1	10 U	10 U	10 U	10 U	40	25	5 U

NR = Analyte not reported
J = Present below detection limit
U = Analyzed but not detected
B = Present in laboratory blank
* = Holding time not met
N = Batch spike not in 80-120% range
E = Estimated value
R = Data rejected during validation.

Groundwater Volatile Organic Results

For Wells at Rockwell (Rocky Flats)

ALLUVIAL WELLS AT THE 881 HILLSIDE

Well Number	Date Sampled	Qtr.	1,1-Di-chloro ethene ug/l	1,1-Di-chloro ethane ug/l	Trans-1,2-Dichloro ethene ug/l	Chloroform ug/l	1,2-Di-chloro ethane ug/l	2-Butanone ug/l	1,1,1-Tri-chloro ethane ug/l
04-87	06/10/89		INSUFFICIENT SAMPLE FOR VOLATILE ORGANIC ANALYSIS						
04-87	06/12/89		Data not yet received						
04-87	07/26/89		Data not yet received						
06-87	07/30/87	3	NF	NF	NF	NF	NF	NF	NF
06-87	08/25/87	3	5 U	NR	NR	5 U	5 U	NR	5 U
06-87	10/14/87	4	5 U	NR	NR	5 U	5 U	NR	5 U
06-87	10/14/87	4	5U	5U	5U	5U	5U	10U	5U
06-87	02/17/88	1	5 U	5 U	NR	5 U	5 U	10 U	5 U
06-87	04/13/88	2	5 U	5 U	NR	5 U	5 U	10 U	5 U
06-87	07/14/88	3	5 U	5 U	NR	5 U	5 U	10 U	5 U
06-87	10/26/88	4	DRY						
06-87	04/17/89	2	5 U	5 U	NR	5 U	5 U	10U	5 U
06-87	06/10/89		Data not yet received						
06-87	07/26/89		Data not yet received						
43-87	12/18/87	4	32687	342	NR	5 U	5 U	10 U	12734
43-87	02/22/88	1	8855	192	NR	5 U	18	10 U	5920

NR = Analyte not reported
J = Present below detection limit
U = Analyzed but not detected
B = Present in laboratory blank
* = Holding time not met
N = Batch spike not in 80-120% range
E = Estimated value
R = Data rejected during validation.

Groundwater Volatile Organic Results

For Wells at Rockwell (Rocky Flats)

ALLUVIAL WELLS AT THE 881 HILLSIDE

Well Number	Date Sampled	Qtr.	Carbon Tetra chloride ug/l	Vinyl Acetate ug/l	Bromo dichloro methane ug/l	1,2-Di-chloro propane ug/l	Cis-1,3-Dichloro propene ug/l	Trichloro ethene ug/l	Dibromo chloro methane ug/l
04-87	06/10/89		INSUFFICIENT SAMPLE FOR VOLATILE ORGANIC ANALYSIS						
04-87	06/12/89		Data not yet received						
04-87	07/26/89		Data not yet received						
06-87	07/30/87	3	NF	NF	NF	NF	NF	NF	NF
06-87	08/25/87	3	5 U	NR	NR	NR	NR	20	NR
06-87	10/14/87	4	5 U	NR	NR	NR	NR	12	NR
06-87	10/14/87	4	5U	10U	5U	5U	5U	16B	5U
06-87	02/17/88	1	5 U	10 U	5 U	5 U	5 U	14	5 U
06-87	04/13/88	2	5 U	10 U	5 U	5 U	5 U	16	5 U
06-87	07/14/88	3	5 U	10 U	5 U	5 U	5 U	12	5 U
06-87	10/26/88	4	DRY						
06-87	04/17/89	2	5 U	10U R	5 U	5 U	5 U	5 U	5 U
06-87	06/10/89		Data not yet received						
06-87	07/26/89		Data not yet received						
43-87	12/18/87	4	2170	10 U	5 U	5 U	5 U	6999	5U
43-87	02/22/88	1	2995	10 U	5 U	5 U	5 U	12920	5 U

NR = Analyte not reported
J = Present below detection limit
U = Analyzed but not detected
B = Present in laboratory blank
* = Holding time not met
N = Batch spike not in 80-120% range
E = Estimated value
R = Data rejected during validation.

Groundwater Volatile Organic Results
For Wells at Rockwell (Rocky Flats)

ALLUVIAL WELLS AT THE 881 HILLSIDE

Well Number	Date Sampled	Qtr.	1,1,2-Tri chloro ethane ug/l	Benzene ug/l	Trans-1,3-Dichloro propene ug/l	2-Chloro ethylvinyl ether ug/l	Bromoform ug/l	4-Methyl-2-penta none ug/l	2-Hexanone ug/l
04-87	06/10/89		INSUFFICIENT SAMPLE FOR VOLATILE ORGANIC ANALYSIS						
04-87	06/12/89		Data not yet received						
04-87	07/26/89		Data not yet received						
06-87	07/30/87	3	NF	NF	NF	NF	NF	NF	NF
06-87	08/25/87	3	5 U	NR	NR	NR	NR	NR	NR
06-87	10/14/87	4	5 U	NR	NR	NR	NR	NR	NR
06-87	10/14/87	4	5U	5U	5U	10U	5U	10U	10U
06-87	02/17/88	1	5 U	5 U	5 U	10 U	5 U	10 U	10 U
06-87	04/13/88	2	5 U	5 U	5 U	10 U	5 U	10 U	10 U
06-87	07/14/88	3	5 U	5 U	5 U	10 U	5 U	10 U	10 U
06-87	10/26/88	4	DRY						
06-87	04/17/89	2	5 U	5 U	5 U	NR	5 U	10 U	10 U
06-87	06/10/89		Data not yet received						
06-87	07/26/89		Data not yet received						
43-87	12/18/87	4	48	5 U	5 U	NR	5 U	10 U	10 U
43-87	02/22/88	1	5 U	5 U	5 U	10 U	5 U	10 U	10 U

NR = Analyte not reported
J = Present below detection limit
U = Analyzed but not detected
B = Present in laboratory blank
* = Holding time not met
N = Batch spike not in 80-120% range
E = Estimated value
R = Data rejected during validation.

Groundwater Volatile Organic Results

For Wells at Rockwell (Rocky Flats)

ALLUVIAL WELLS AT THE 881 HILLSIDE

Well Number	Date Sampled	Qtr.	Tetra chloro ethane ug/l	1,1,2,2-Tetrachloro ethane ug/l	Toluene ug/l	Chloro benzene ug/l	Ethyl benzene ug/l	Styrene ug/l	Total Xylenes ug/l
04-87	06/10/89		INSUFFICIENT SAMPLE FOR VOLATILE ORGANIC ANALYSIS						
04-87	06/12/89		Data not yet received						
04-87	07/26/89		Data not yet received						
06-87	07/30/87	3	NF	NF	NF	NF	NF	NF	NF
06-87	08/25/87	3	5 U	NR	NR	NR	NR	NR	NR
06-87	10/14/87	4	5 U	NR	NR	NR	NR	NR	NR
06-87	10/14/87	4	5U	5U	5U	5U	5U	5U	5U
06-87	02/17/88	1	5 U	5 U	5 U	5 U	5 U	5 U	5 U
06-87	04/13/88	2	5 U	5 U	5 U	5 U	5 U	5 U	5 U
06-87	07/14/88	3	5 U	5 U	5 U	5 U	5 U	5 U	5 U
06-87	10/26/88	4	DRY						
06-87	04/17/89	2	5 U	5 U	5 U	5 U	5 U	5 U	5 U
06-87	06/10/89		Data not yet received						
06-87	07/26/89		Data not yet received						
43-87	12/18/87	4	4259	5 U	67	5 U	5 U	5 U	5 U
43-87	02/22/88	1	7590	5 U	24	5 U	5 U	5 U	5 U

NR = Analyte not reported
J = Present below detection limit
U = Analyzed but not detected
B = Present in laboratory blank
* = Holding time not met
N = Batch spike not in 80-120% range
E = Estimated value
R = Data rejected during validation.

Groundwater Volatile Organic Results

For Wells at Rockwell (Rocky Flats)

ALLUVIAL WELLS AT THE 881 HILLSIDE

Well Number	Date Sampled	Qtr.	Chloro methane ug/l	Bromo methane ug/l	Vinyl Chloride ug/l	Chloro ethane ug/l	Methylene Chloride ug/l	Acetone ug/l	Carbon Disulfide ug/l
43-87	04/11/88	2	10 U	10 U	10 U	10 U	19	10 U	5 U
43-87	07/20/88	3	10 U	10 U	10 U	10 U	61	10 U	5 U
43-87	10/17/88	4	10 U	10 U	10 U	10 U	31	5 J	5 U
43-87	01/25/89	1	10 U	10 U	10U R	10 U	5 U	10 U	5 U
43-87	04/24/89	2	10 U	10 U	10 U	10 U	5 U	10U R	5 U
43-87	06/10/89		Data not yet received						
43-87	06/10/89		Data not yet received						
43-87	06/11/89		Data not yet received						
43-87	06/11/89		INSUFFICIENT SAMPLE FOR VOLATILE ORGANIC ANAYSIS						
43-87	08/18/89		Data not yet received						
44-87	11/14/87	4	DRY						
44-87	02/22/88	1	DRY						
44-87	04/18/88	2	DRY						
44-87	07/20/88	3	DRY						
44-87	10/26/88	4	DRY						
44-87	06/10/89		DRY						
44-87	08/17/89		DRY						

NR = Analyte not reported
J = Present below detection limit
U = Analyzed but not detected
B = Present in laboratory blank
* = Holding time not met
N = Batch spike not in 80-120% range
E = Estimated value
R = Data rejected during validation.

Groundwater Volatile Organic Results

For Wells at Rockwell (Rocky Flats)

ALLUVIAL WELLS AT THE 881 HILLSIDE

Well Number	Date Sampled	Qtr.	1,1-Di-chloro ethene ug/l	1,1-Di-chloro ethane ug/l	Trans-1,2-Dichloro ethene ug/l	Chloroform ug/l	1,2-Di-chloro ethane ug/l	2-Butanone ug/l	1,1,1-Tri-chloro ethane ug/l
43-87	04/11/88	2	3525	100	NR	5 U	5 U	10 U	5 U
43-87	07/20/88	3	13390	344	NR	5 U	5 U	10 U	5 U
43-87	10/17/88	4	11000	350E	NR	3 JB	5 U	10 U	25000E
43-87	01/25/89	1	6300	150 J	NR	5 U	16 J	10U R	15000
43-87	04/24/89	2	7900 J	110 J	NR	5 U	14 J	10U R	9000 J
43-87	06/10/89		Data not yet received						
43-87	06/10/89		Data not yet received						
43-87	06/11/89		Data not yet received						
43-87	06/11/89		INSUFFICIENT SAMPLE FOR VOLATILE ORGANIC ANALYSIS						
43-87	08/18/89		Data not yet received						
44-87	11/14/87	4	DRY						
44-87	02/22/88	1	DRY						
44-87	04/18/88	2	DRY						
44-87	07/20/88	3	DRY						
44-87	10/26/88	4	DRY						
44-87	06/10/89		DRY						
44-87	08/17/89		DRY						

NR = Analyte not reported
J = Present below detection limit
U = Analyzed but not detected
B = Present in laboratory blank
* = Holding time not met
N = Batch spike not in 80-120% range
E = Estimated value
R = Data rejected during validation.

Groundwater Volatile Organic Results

For Wells at Rockwell (Rocky Flats)

ALLUVIAL WELLS AT THE 881 HILLSIDE

Well Number	Date Sampled	Qtr.	Carbon Tetra chloride ug/l	Vinyl Acetate ug/l	Bromo dichloro methane ug/l	1,2-Di-chloro propane ug/l	Cis-1,3-Dischloro propene ug/l	Trichloro ethene ug/l	Dibromo chloro methane ug/l
43-87	04/11/88	2	5 U	10 U	5 U	5 U	5 U	7343	5U
43-87	07/20/88	3	5 U	10 U	5 U	5 U	5 U	15540	5U
43-87	10/17/88	4	310E	10 U	5 U	5 U	5 U	17000	5U
43-87	01/25/89	1	5 U	10 U	5 U	5 U	5 U	11000	5U
43-87	04/24/89	2	5 U	10U R	5 U	5 U	5 U	8500 J	5U
43-87	06/10/89		Data not yet received						
43-87	06/10/89		Data not yet received						
43-87	06/11/89		Data not yet received						
43-87	06/11/89		INSUFFICIENT SAMPLE FOR VOLATILE ORGANIC ANALYSIS						
43-87	08/18/89		Data not yet received						
44-87	11/14/87	4	DRY						
44-87	02/22/88	1	DRY						
44-87	04/18/88	2	DRY						
44-87	07/20/88	3	DRY						
44-87	10/26/88	4	DRY						
44-87	06/10/89		DRY						
44-87	08/17/89		DRY						

NR = Analyte not reported
J = Present below detection limit
U = Analyzed but not detected
B = Present in laboratory blank
* = Holding time not met
N = Batch spike not in 80-120% range
E = Estimated value
R = Data rejected during validation.

Groundwater Volatile Organic Results

For Wells at Rockwell (Rocky Flats)

ALLUVIAL WELLS AT THE 881 HILLSIDE

Well Number	Date Sampled	Qtr.	1,1,2-Tri chloro ethane ug/l	Benzene ug/l	Trans-1,3- Dichloro propene ug/l	2-Chloro ethylvinyl ether ug/l	Bromoform ug/l	4-Methyl- 2-penta none ug/l	2-Hexanone ug/l
43-87	04/11/88	2	5 U	5 U	5 U	10 U	5 U	10 U	10 U
43-87	07/20/88	3	5 U	5 U	5 U	10 U	5 U	10 U	10 U
43-87	10/17/88	4	5 U	83	5 U	10 U	5 U	10 U	10 U
43-87	01/25/89	1	29 J	5 U	5 U	NR	5 U	10 U	10 U
43-87	04/24/89	2	44 J	5 U	5 U	NR	5 U	10 U	10 U
43-87	06/10/89		Data not yet received						
43-87	06/10/89		Data not yet received						
43-87	06/11/89		Data not yet received						
43-87	06/11/89		INSUFFICIENT SAMPLE FOR VOLATILE ORGANIC ANALYSIS						
43-87	08/18/89		Data not yet received						
44-87	11/14/87	4	DRY						
44-87	02/22/88	1	DRY						
44-87	04/18/88	2	DRY						
44-87	07/20/88	3	DRY						
44-87	10/26/88	4	DRY						
44-87	06/10/89		DRY						
44-87	08/17/89		DRY						

NR = Analyte not reported
J = Present below detection limit
U = Analyzed but not detected
B = Present in laboratory blank
* = Holding time not met
N = Batch spike not in 80-120% range
E = Estimated value
R = Data rejected during validation.

Groundwater Volatile Organic Results

For Wells at Rockwell (Rocky Flats)

ALLUVIAL WELLS AT THE 881 HILLSIDE

Well Number	Date Sampled	Qtr.	Tetra chloro ethane ug/l	1,1,2,2- Tetrachloro ethane ug/l	Toluene ug/l	Chloro benzene ug/l	Ethyl benzene ug/l	Styrene ug/l	Total Xylenes ug/l
43-87	04/11/88	2	4495	5 U	5 U	5 U	5 U	5 U	5 U
43-87	07/20/88	3	6970	5 U	227	5 U	5 U	5 U	5 U
43-87	10/17/88	4	8100	5 U	180 B	5 U	4 J	5 U	5 U
43-87	01/25/89	1	3400 J	5 U	5 U	5 U	5 U	5 U	5 U
43-87	04/24/89	2	5900 J	5 U	5 U	5 U	5 U	5 U	5 U
43-87	06/10/89		Data not yet received						
43-87	06/10/89		Data not yet received						
43-87	06/11/89		Data not yet received						
43-87	06/11/89		INSUFFICIENT SAMPLE FOR VOLATILE ORGANIC ANALYSIS						
43-87	08/18/89		Data not yet received						
44-87	11/14/87	4	DRY						
44-87	02/22/88	1	DRY						
44-87	04/18/88	2	DRY						
44-87	07/20/88	3	DRY						
44-87	10/26/88	4	DRY						
44-87	06/10/89		DRY						
44-87	08/17/89		DRY						

NR = Analyte not reported
J = Present below detection limit
U = Analyzed but not detected
B = Present in laboratory blank
* = Holding time not met
N = Batch spike not in 80-120% range
E = Estimated value
R = Data rejected during validation.

Groundwater Volatile Organic Results

For Wells at Rockwell (Rocky Flats)

ALLUVIAL WELLS AT THE 881 HILLSIDE

Well Number	Date Sampled	Qtr.	Chloro methane ug/l	Bronmo methane ug/l	Vinyl Choride ug/l	Chloro ehtane ug/l	Methylene Chloride ug/l	Acetone ug/l	Carbon Disulfide ug/l
49-87	11/18/87	4	DRY						
49-87	02/17/88	1	DRY						
49-87	04/13/88	2	DRY						
49-87	04/13/88	2	DRY						
49-87	07/18/88	3	DRY						
49-87	10/21/88	4	DRY						
49-87	06/10/89		DRY						
49-87	07/26/89		DRY						
50-87	11/18/87	4	10 U	10 U	10 U	10 U	5 U	10	5 U
50-87	11/18/87	4	10 U	10 U	10 U	10 U	2 JB		
50-87	02/17/88	1	DRY						
50-87	04/13/88	2	DRY						
50-87	07/18/88	3	DRY						
50-87	10/21/88	4	DRY						
50-87	06/09/89		DRY						
50-87	07/25/89		DRY						

NR = Analyte not reported
J = Present below detection limit
U = Analyzed but not detected
B = Present in laboratory blank
* = Holding time not met
N = Batch spike not in 80-120% range
E = Estimated value
R = Data rejected during validation.

Groundwater Volatile Organic Results

For Wells at Rockwell (Rocky Flats)

ALLUVIAL WELLS AT THE 881 HILLSIDE

Well Number	Date Sampled	Qtr.	1,1-Di chloro ethane ug/l	1,1-Di chloro ethane ug/l	Trans-1,2- Dichloro ethane ug/l	Chloroform ug/l	1,2-Di- chloro ethane ug/l	2-Butanone ug/l	1,1,1-Tri Chloro ethane ug/l
49-87	11/18/87	4	DRY						
49-87	02/17/88	1	DRY						
49-87	04/13/88	2	DRY						
49-87	04/13/88	2	DRY						
49-87	07/18/88	3	DRY						
49-87	10/21/88	4	DRY						
49-87	06/10/89		DRY						
49-87	07/26/89		DRY						
50-87	11/18/87	4	5 U	5 U	NR	5 U	5 U	10 U	5 U
50-87	11/18/87	4	5 U	5 U	5 U	5 U	5 U	10 U	5 U
50-87	02/17/88	1	DRY						
50-87	04/13/88	2	DRY						
50-87	07/18/88	3	DRY						
50-87	10/21/88	4	DRY						
50-87	06/09/89		DRY						
50-87	07/25/89		DRY						

NR = Analyte not reported
J = Present below detection limit
U = Analyzed but not detected
B = Present in laboratory blank
* = Holding time not met
N = Batch spike not in 80-120% range
E = Estimated value
R = Data rejected during validation.

Groundwater Volatile Organic Results

For Wells at Rockwell (Rocky Flats)

ALLUVIAL WELLS AT THE 881 HILLSIDE

Well Number	Date Sampled	Qtr.	Carbon Tetra chloride ug/l	Vinyl Acetate ug/l	Brono dichloro methane ug/l	1,2-di-chloro propane ug/l	Cis-1,3-Dichloro propene ug/l	Trichloro ethene ug/l	dibrono chloro methane ug/l
49-87	11/18/87	4	DRY						
49-87	02/17/88	1	DRY						
49-87	04/13/88	2	DRY						
49-87	04/13/88	2	DRY						
49-87	07/18/88	3	DRY						
49-87	10/21/88	4	DRY						
49-87	06/10/89		DRY						
49-87	07/26/89		DRY						
50-87	11/18/87	4	5 U	10 U	5 U	5 U	5 U	5 U	5 U
50-87	11/18/87	4	5 U	10 U	5 U	5 U	5 U	5 U	5 U
50-87	02/17/88	1	DRY						
50-87	04/13/88	2	DRY						
50-87	07/18/88	3	DRY						
50-87	10/21/88	4	DRY						
50-87	06/09/89		DRY						
50-87	07/25/89		DRY						

NR = Analyte not reported
J = Present below detection limit
U = Analyzed but not detected
B = Present in laboratory blank
* = Holding time not met
N = Batch spike not in 80-120% range
E = Estimated value
R = Data rejected during validation.

Groundwater Volatile Organic Results

For Wells at Rockwell (Rocky Flats)

ALLUVIAL WELLS AT THE 881 HILLSIDE

Well Number	Date Sampled	Qtr.	1,1,2,-Tri Chloro ethane ug/l	Benzene ug/l	Trans-1,3- Dichloro propene ug/l	2-Chloro ethylvinyl ether ug/l	Bronoform ug/l	4-Methyl- 2-penta none ug/l	2-Hexanone ug/l
49-87	11/18/87	4	DRY						
49-87	02/17/88	1	DRY						
49-87	04/13/88	2	DRY						
49-87	04/13/88	2	DRY						
49-87	08/18/88	3	DRY						
49-87	10/21/88	4	DRY						
49-87	06/10/89		DRY						
49-87	07/26/89		DRY						
50-87	11/18/87	4	5 U	5 U	5 U	NR	5 U	10 U	10 U
50-87	11/18/87	4	5 U	5 U	5 U	10 U	5 U	10 U	10 U
50-87	02/17/88	1	DRY						
50-87	04/13/88	2	DRY						
50-87	07/18/88	3	DRY						
50-87	10/21/88	4	DRY						
50-87	06/09/89		DRY						
50-87	07/25/89		DRY						

NR = Analyte not reported
J = Present below detection limit
U = Analyzed but not detected
B = Present in laboratory blank
* = Holding time not met
N = Batch spike not in 80-120% range
E = Estimated value
R = Data rejected during validation.

Groundwater Volatile Organic Results

For Wells at Rockwell (Rocky Flats)

ALLUVIAL WELLS AT THE 881 HILLSIDE

Well Number	Date Sampled	Qtr	Tetra chloro ethene ug/l	1,1,2,2-Tetra chloro ethane ug/l	Toluene ug/l	Chloro benzene ug/l	Ethyl benzene ug/l	Styrene ug/l	Total Xylenes ug/l
49-87	11/18/87	4	DRY						
49-87	02/17/88	1	DRY						
49-87	04/13/88	2	DRY						
49-87	04/13/88	2	DRY						
49-87	07/18/88	3	DRY						
49-87	10/21/88	4	DRY						
49-87	06/10/89		DRY						
49-87	07/26/89		DRY						
50-87	11/18/87	4	5 U	5 U	5 U	5 U	5 U	5 U	5 U
50-87	11/18/87	4	3 J	5 U	5 U	5 U	5 U	5 U	5 U
50-87	02/17/88	1	DRY						
50-87	04/13/88	2	DRY						
50-87	07/18/88	3	DRY						
50-87	10/21/88	4	DRY						
50-87	06/09/89		DRY						
50-87	07/25/89		DRY						

NR = Analyte not reported
J = Present below detection limit
U = Analyzed but not detected
B = Present in laboratory blank
* = Holding time not met
N = Batch spike not in 80-120% range
E = Estimated value
R = Data rejected during validation.

Groundwater Volatile Organic Results

For Wells at Rockwell (Rocky Flats)

ALLUVIAL WELLS AT THE 881 HILLSIDE

Well Number	Date Sampled	Qtr.	Chloro methane ug/l	Bromo methane ug/l	Vinyl Chloride ug/l	Chloro ethane ug/l	Methylene Chloride ug/l	Acetone ug/l	Carbon Disulfide ug/l
51-87	11/23/87	4	DRY						
51-87	02/12/88	1	DRY						
51-87	04/18/88	2	DRY						
51-87	07/18/88	3	DRY						
51-87	10/21/88	4	DRY						
51-87	06/12/89		Data not yet received						
51-87	08/14/89		Data not yet received						
52-87	11/23/87	4	10 U	10 U	10 U	10 U	5 U	10 U	5 U
52-87	11/23/87	4	50 U	50 U	50 U	50 U	21 JB	130 B	25 U
52-87	02/12/88	1	10 U	10 U	10 U	10 U	5 U	10 U	5 U
52-87	04/18/88	2	10 U	10 U	10 U	10 U	5 U	10 U	5 U
52-87	07/18/88	3	10 U	10 U	10 U	10 U	5 U	10 U	5 U
52-87	10/18/88	4	10 U	10 U	10 U	10 U	5 U	10 U	5 U
52-87	01/16/89	1	10U R	10U R	10 U	10 U	6 U	10 U	5 U
52-87	04/17/89	2	10 U	10 U	10 U	10 U	5 U	10U R	5 U
52-87	06/12/89		Data not yet received						
52-87	06/12/89		Data not yet received						

NR = Analyte not reported
J = Present below detection limit
U = Analyzed but not detected
B = Present in laboratory blank
* = Holding time not met
N = Batch spike not in 80-120% range
E = Estimated value
R = Data rejected during validation.

Groundwater Volatile Organic Results

For Wells at Rockwell (Rocky Flats)

ALLUVIAL WELLS AT THE 881 HILLSIDE

Well Number	Date Sampled	Qtr.	1,1-Di-chloro ethene ug/l	1,1-Di-chloro ethane ug/l	Trans-1,2-Dichloro ethene ug/l	Chloroform ug/l	1,2-Di-chloro ethane ug/l	2-Butanone ug/l		1,1,1-Tri chloro ethane ug/l
51-87	11/23/87	4	DRY							
51-87	02/12/88	1	DRY							
51-87	04/18/88	2	DRY							
51-87	07/18/88	3	DRY							
51-87	10/21/88	4	DRY							
51-87	06/12/89		Data not yet received							
51-87	08/14/89		Data not yet received							
52-87	11/23/87	4	5 U	5 U	NR	5 U	5 U	10 U		5 U
52-87	11/23/87	4	25 U	25 U	25 U	25 U	25 U	50 U		25 U
52-87	02/12/88	1	5 U	5 U	NR	5 U	5 U	10 U		5 U
52-87	04/18/88	2	5 U	5 U	NR	5 U	5 U	10 U		5 U
52-87	07/18/88	3	5 U	5 U	NR	5 U	5 U	10 U		5 U
52-87	10/18/88	4	5 U	5 U	NR	5 U	5 U	10 U		5 U
52-87	01/16/89	1	5 U	5 U	NR	5 U	5 U	10U	R	5 U
52-87	04/17/89	2	5 U	5 U	NR	5 U	5 U	10 U		5 U
52-87	06/12/89		Data not yet received							
52-87	06/12/89		Data not yet received							

NR = Analyte not reported
J = Present below detection limit
U = Analyzed but not detected
B = Present in laboratory blank
* = Holding time not met
N = Batch spike not in 80-120% range
E = Estimated value
R = Data rejected during validation.

Groundwater Volatile Organic Results

For Wells at Rockwell (Rocky Flats)

ALLUVIAL WELLS AT THE 881 HILLSIDE

Well Number	Date Sampled	Qtr.	Carbon tetra chloride ug/l	VinyL Acetate ug/l	Bromo dichloro methane ug/l	1,2-Di-chloro propane ug/l	Cis-1,3-Dichloro propene ug/l	Trichloro ethene ug/l	Dibromo chloro methane ug/l
51-87	11/23/87	4	DRY						
51-87	02/12/88	1	DRY						
51-87	04/18/88	2	DRY						
51-87	07/18/88	3	DRY						
51-87	10/21/88	4	DRY						
51-87	06/12/89		Data not yet received						
51-87	08/14/89		Data not yet received						
52-87	11/23/87	4	5 U	10 U	5 U	5 U	5 U	5 U	5 U
52-87	11/23/87	4	25 U	50 U	25 U	25 U	25 U	25 U	25 U
52-87	02/12/88	1	5 U	10 U	5 U	5 U	5 U	5 U	5 U
52-87	04/18/88	2	5 U	10 U	5 U	5 U	5 U	5 U	5 U
52-87	07/18/88	3	5 U	10 U	5 U	5 U	5 U	5 U	5 U
52-87	10/18/88	4	5 U	10 U	5 U	5 U	2 J	5 U	5 U
52-87	01/16/89	1	5 U	10 U	5 U	5 U	5 U	5 U	5 U
52-87	04/17/89	2	5 U	10U R	5 U	5 U	5 U	5 U	5 U
52-87	06/12/89		Data not yet received						
52-87	06/12/89		Data not yet received						

NR = Analyte not reported
J = Present below detection limit
U = Analyzed but not detected
B = Present in laboratory blank
* = Holding time not met
N = Batch spike not in 80-120% range
E = Estimated value
R = Data rejected during validation.

Groundwater Volatile Organic Results

For Wells at Rockwell (Rocky Flats)

ALLUVIAL WELLS AT THE 881 HILLSIDE

Well Number	Date Sampled	Qtr.	1,1,2-Tri chloro ethane ug/l	Benzene ug/l	Trans-1,3- Dichloro propene ug/l	2-Chloro ethylvinyl ether ug/l	Bromoform ug/l	4-Methyl- 2-penta none ug/l	2-Hexanone ug/l
51-87	11/23/87	4	DRY						
51-87	02/12/88	1	DRY						
51-87	04/18/88	2	DRY						
51-87	07/18/88	3	DRY						
51-87	10/21/88	4	DRY						
51-87	06/12/89		Data not yet received						
51-87	08/14/89		Data not yet received						
52-87	11/23/87	4	5 U	5 U	5 U	NR	5 U	10 U	10 U
52-87	11/23/87	4	25 U	25 U	25 U	50 U	25 U	50 U	50 U
52-87	02/12/88	1	5 U	5 U	5 U	10 U	5 U	10 U	10 U
52-87	04/18/88	2	5 U	5 U	5 U	10 U	5 U	10 U	10 U
52-87	07/18/88	3	5 U	5 U	5 U	10 U	5 U	10 U	10 U
52-87	10/18/88	4	5 U	5 U	5 U	10 U	5 U	10 U	10 U
52-87	01/16/89	1	5 U	5 U	5 U	NR	5 U	10 U	10 U
52-87	04/17/89	2	5 U	5 U	5 U	NR	5 U	10 U	10 U
52-87	06/12/89		Data not yet received						
52-87	06/12/89		Data not yet received						

NR = Analyte not reported
U = Analyzed but not detected
* = Holding time not met
E = Estimated value
J = Present below detection limit
B = Present in laboratory blank
N = Batch spike not in 80-120% range
R = Data rejected during validation.

Groundwater Volatile Organic Results

For Wells at Rockwell (Rocky Flats)

ALLUVIAL WELLS AT THE 881 HILLSIDE

Well Number	Date Sampled	Qtr.	Tetra chloro ethene ug/l	1,1,2,2-Tetrachloro ethane ug/l	Toluene ug/l	Chloro benzene ug/l	Ethyl benzene ug/l	Styrene ug/l	Total Xylenes ug/l
51-87	11/23/87	4	DRY						
51-87	02/12/88	1	DRY						
51-87	04/18/88	2	DRY						
51-87	07/18/88	3	DRY						
51-87	10/21/88	4	DRY						
51-87	06/12/89		Data not yet received						
51-87	08/14/89		Data not yet received						
52-87	11/23/87	4	5 U	5 U	5 U	5 U	5 U	5 U	5 U
52-87	11/23/87	4	25 U	25 U	25 U	25 U	25 U	25 U	25 U
52-87	02/12/88	1	5 U	5 U	5 U	5 U	5 U	5 U	5 U
52-87	04/18/88	2	2 J	5 U	5 U	5 U	5 U	5 U	5 U
52-87	07/18/88	3	5 U	5 U	5 U	5 U	5 U	5 U	5 U
52-87	10/18/88	4	2 J	5 U	0.9 JB	5 U	5 U	5 U	5 U
52-87	01/16/89	1	2 J	5 U	5 U	5 U	5 U	5 U	5 U
52-87	04/17/89	2	5 U	5 U	5 U	5 U	5 U	5 U	5 U
52-87	06/12/89		Data not yet received						
52-87	06/12/89		Data not yet received						

NR = Analyte not reported
J = Present below detection limit
U = Analyzed but not detected
B = Present in laboratory blank
* = Holding time not met
N = Batch spike not in 80-120% range
E = Estimated value
R = Data rejected during validation.

Groundwater Volatile Organic Results

For Wells at Rockwell (Rocky Flats)

ALLUVIAL WELLS AT THE 881 HILLSIDE

Well Number	Date Sampled	Qtr.	Chloro methane ug/l	Bromo methane ug/l	Vinyl Chloride ug/l	Chloro ethane ug/l	Methylene Chloride ug/l	Acetone ug/l	Carbon Disulfide ug/l
52-87	08/14/89		Data not yet received						
53-87	11/18/97	4	10 U	10 U	10 U	10 U	21	10 U	5 U
53-87	11/18/87	4	10 U	10 U	10 U	10 U	2 JB	9 JB	5 U
53-87	02/10/88	1	DRY						
53-87	04/11/88	2	10 U	10 U	10 U	10 U	5 U	10 U	5 U
53-87	07/18/88	3	DRY						
53-87	10/21/88	4	DRY						
53-87	06/08/89		Data not yet received						
53-87	07/25/89		Data not yet received						
54-87	11/18/87	4	10 U	10 U	10 U	10 U	5 U	10 U	5 U
54-87	11/18/87	4	10 U	10 U	10 U	10 U	5 U	10 U	5 U
54-87	11/18/87	4	10 U	10 U	10 U	10 U	2 JB	13 B	5 U
54-87	02/10/88	1	DRY						
54-87	04/11/88	2	10 U	10 U	10 U	10 U	5 U	10 U	5 U
54-87	07/18/88	3	DRY						

NR = Analyte not reported
J = Present below detection limit
U = Analyzed but not detected
B = Present in laboratory blank
* = Holding time not met
N = Batch spike not in 80-120% range
E = Estimated value
R = Data rejected during validation.

Groundwater Volatile Organic Results

For Wells at Rockwell (Rocky Flats)

ALLUVIAL WELLS AT THE 881 HILLSIDE

Well Number	Date Sampled	Qtr.	1,1-Di-chloro ethene ug/l	1,2-Di chloro ethane ug/l	Trans-1,2-Dichloro ethene ug/l	chloroform ug/l	1,2-Di-chloro ethane ug/l	2-Butanone ug/l	1,1,1-Tri chloro ethane ug/l
52-87	08/14/89		Data not yet received						
53-87	11/18/97	4	21	5 U	NR	5 U	5 U	10 U	18
53-87	11/18/87	4	5 U	5 U	5 U	5 U	5 U	10 U	2 J
53-87	02/10/88	1	DRY						
53-87	04/11/88	2	5 U	5 U	NR	5 U	5 U	10 U	5 U
53-87	07/18/88	3	DRY						
53-87	10/21/88	4	DRY						
53-87	06/08/89		Data not yet received						
53-87	07/25/89		Data not yet received						
54-87	11/18/87	4	5 U	5 U	NR	8	5 U	10 U	5 U
54-87	11/18/87	4	5 U	5 U	NR	5 U	5 U	10 U	5 U
54-87	11/18/87	4	5 U	5 U	5 U	5 U	5 U	10 U	2 J
54-87	02/10/88	1	DRY						
54-87	04/11/88	2	5 U	5 U	NR	5 U	5 U	10 U	5 U
54-87	07/18/88	3	DRY						

NR = Analyte not reported
J = Present below detection limit
U = Analyzed but not detected
B = Present in laboratory blank
* = Holding time not met
N = Batch spike not in 80-120% range
E = Estimated value
R = Data rejected during validation.

Groundwater Volatile Organic Results

For Wells at Rockwell (Rocky Flats)

ALLUVIAL WELLS AT THE 881 HILLSIDE

Well Number	Date Sampled	Qtr.	Carbon Tetra chloride ug/l	Vinyl Acetate ug/l	Bromo dichloro methane ug/l	1,2-Di chloro propane ug/l	Cis-1,3- Dichloro propene ug/l	Trichloro ethene ug/l	Dibromo chloro methane ug/l
52-87	08/14/89		Data not yet received						
53-87	11/18/97	4	6	10 U	5 U	5 U	5 U	23	5 U
53-87	11/18/87	4	5 U	10 U	5 U	5 U	5 U	5 U	5 U
53-87	02/10/88	1	DRY						
53-87	04/11/88	2	5 U	10 U	5 U	5 U	5 U	3 J	5 U
53-87	07/18/88	3	DRY						
53-87	10/21/88	4	DRY						
53-87	06/08/89		Data not yet received						
53-87	07/25/89		Data not yet received						
54-87	11/18/87	4	5 U	10 U	5 U	5 U	5 U	5 U	5 U
54-87	11/18/87	4	5 U	10 U	5 U	5 U	5 U	5 U	5 U
54-87	11/18/87	4	5 U	10 U	5 U	5 U	5 U	5 U	5 U
54-87	02/10/88	1	DRY						
54-87	04/11/88	2	5 U	10 U	5 U	5 U	5 U	5 U	5 U
54-87	07/18/88	3	DRY						

NR = Analyte not reported
J = Present below detection limit
U = Analyzed but not detected
B = Present in laboratory blank
* = Holding time not met
N = Batch spike not in 80-120% range
E = Estimated value
R = Data rejected during validation.

Groundwater Volatile Organic Results

For Wells at Rockwell (Rocky Flats)

ALLUVIAL WELLS AT THE 881 HILLSIDE

Well Number	Date Sampled	Qtr.	1,1,2-Tri chloro ethane ug/l	Benzene ug/l	Trans-1,3- Dichloro propene ug/l	2-Chloro ethylvinyl ether ug/l	Bromofo rm uglL	4-Methyl- 2-penta none ug/l	2- Hexanone ug/l
52-87	08/14/89		Data not yet received						
53-87	11/18/97	4	5 U	5 U	5 U	NR	5 U	10 U	10 U
53-87	11/18/87	4	5 U	5 U	5 U	10 U	5 U	10 U	10 U
53-87	02/10/88	1	DRY						
53-87	04/11/88	2	5 U	5 U	5 U	10 U	5 U	10 U	10 U
53-87	07/18/88	3	DRY						
53-87	10/21/88	4	DRY						
53-87	06/08/89		Data not yet received						
53-87	07/25/89		Data not yet received						
54-87	11/18/87	4	5 U	5 U	5 U	NR	5 U	10 U	10 U
54-87	11/18/87	4	5 U	5 U	5 U	NR	5 U	10 U	10 U
54-87	11/18/87	4	5 U	5 U	5 U	10 U	5 U	10 U	10 U
54-87	02/10/88	1	DRY						
54-87	04/11/88	2	5 U	5 U	5 U	10 U	5 U	10 U	10 U
54-87	07/18/88	3	DRY						

NR = Analyte not reported
J = Present below detection limit
U = Analyzed but not detected
B = Present in laboratory blank
* = Holding time not met
N = Batch spike not in 80-120% range
E = Estimated value
R = Data rejected during validation.

Groundwater Volatile Organic Results

For Wells at Rockwell (Rocky Flats)

ALLUVIAL WELLS AT THE 881 HILLSIDE

Well Number	Date Sampled	Qtr.	Tetra Chloro ethene ug/l	1,1,2,2-Tetrachloro ethane ug/l	Toluene ug/l	Chloro benzene ug/l	Ethyl benzene ug/l	Styrene ug/l	Total Xylenes ug/l
52-87	08/14/89		Date not yet received						
53-87	11/18/87	4	5 U	5 U	11	5 U	5 U	5 U	5 U
53-87	11/18/87	4	3 J	5 U	5 U	5 U	5 U	5 U	5 U
53-87	02/10/88	1	DRY						
53-87	04/11/88	2	3 J	5 U	5 U	5 U	5 U	5 U	5 U
53-87	07/18/88	3	DRY						
53-87	10/21/88	4	DRY						
53-87	06/08/89		Data not yet received						
53-87	07/25/89		Data not yet received						
54-87	11/18/87	4	5 U	5 U	5 U	5 U	5 U	5 U	5 U
54-87	11/18/87	4	3 J	5 U	5 U	5 U	5 U	5 U	5 U
54-87	11/18/87	4	4 J	5 U	5 U	5 U	5 U	5 U	
54-87	02/10/88	1	DRY						
54-87	04/11/88	2	5 U	5 U	5 U	5 U	5 U	5 U	5 U
54-87	07/18/88	3	DRY						

NR = Analyte not reported
J = Present below detection limit
U = Analyzed but not detected
B = Present in laboratory blank
* = Holding time not met
N = Batch spike not in 80-120% range
E = Estimated value
R = Data rejected during validation.

Groundwater Volatile Organic Results

For Wells at Rockwell (Rocky Flats)

ALLUVIAL WELLS AT THE 881 HILLSIDE

Well Number	Date Sampled	Qtr.	Chloro methane ug/l	Bromo methane ug/l	Vinyl Chloride ug/l	Chloro ethane ug/l	Methylene Chloride ug/l	Acetone ug/l	Carbon Disulfide ug/l
54-87	10/21/88	4	DRY						
54-87	06/08/89		Data not yet received						
54-87	07/26/89		Data not yet received						

NR = Analyte not reported
J = Present below detection limit
U = Analyzed but not detected
B = Present in laboratory blank
* = Holding time not met
N = Batch spike not in 80-120% range
E = Estimated value
R = Data rejected during validation.

Groundwater Volatile Organic Results

For Wells at Rockwell (Rocky Flats)

ALLUVIAL WELLS AT THE 881 HILLSIDE

Well Number	Date Sampled	Qtr.	1,1-Di-Chloro ethene ug/l	1,1-Di-Chloro ethane ug/l	Trans-1,2-Dichloro ethene ug/l	Chloroform ug/l	1,2-Di-Chloro ethane ug/l	2-Butanone ug/l	1,1,1-Tri chloro ethane ug/l
54-87	10/21/88	4		DRY					
54-87	06/08/89			Data not yet received					
54-87	07/26/89			Data not yet received					

NR = Analyte not reported
J = Present below detection limit
U = Analyzed but not detected
B = Present in laboratory blank
* = Holding time not met
N = Batch spike not in 80-120% range
E = Estimated value
R = Data rejected during validation.

Groundwater Volatile Organic Results

For Wells at Rockwell (Rocky Flats)

ALLUVIAL WELLS AT THE 881 HILLSIDE

Well Number	Date Sampled	Qtr.	Carbon Tetra chloride ug/l	Vinyl Acetate ug/l	Bromo dichloro methene ug/l	1,2-Di-chloro propane ug/l	Cis-1,3-Dichloro propane ug/l	Trichloro ethene ug/l	Dibromo chloro methane ug/l
54-87	10/21/88	4	DRY						
54-87	06/08/89		Data not yet received						
54-87	07/26/89		Data not yet received						

NR = Analyte not reported
J = Present below detection limit
U = Analyzed but not detected
B = Present in laboratory blank
* = Holding time not met
N = Batch spike not in 80-120% range
E = Estimated value
R = Data rejected during validation.

Groundwater Volatile Organic Results

For Wells at Rockwell (Rocky Flats)

ALLUVIAL WELLS AT THE 881 HILLSIDE

Well Number	Date Sampled	Qtr.	1,1,2-Tri chloro ethane ug/l	Benzene ug/l	Trans-1,3- Dichloro propane ug/l	2-Chloro ethylvinyl ether ug/l	Bromoform ug/l	4-Methyl- 2-penta none ug/l	2- Hexanone ug/l
54-87	10/21/88	4	DRY						
54-87	06/08/89		Data not yet received						
54-87	07/26/89		Data not yet received						

NR = Analyte not reported
J = Present below detection limit
U = Analyzed but not detected
B = Present in laboratory blank
* = Holding time not met
N = Batch spike not in 80-120% range
E = Estimated value
R = Data rejected during validation.

Groundwater Volatile Organic Results

For Wells at Rockwell (Rocky Flats)

ALLUVIAL WELLS AT THE 881 HILLSIDE

Well Number	Date Sampled	Qtr.	Tetra chloro ethane ug/l	1,1,2,2-Tetrachloro ethane ug/l	Toluene ug/l	Chloro benzene ug/l	Ethyl benzene ug/l	Styrene ug/l	Total Xylenes ug/l
54-87	10/21/88	4	DRY						
54-87	06/08/89		Data not yet received						
54-87	07/26/89		Data not yet received						

NR = Analyte not reported
J = Present below detection limit
U = Analyzed but not detected
B = Present in laboratory blank
* = Holding time not met
N = Batch spike not in 80-120% range
E = Estimated value
R = Data rejected during validation.

ALLUVIAL WELL AT THE 881 HILLSIDE DISSOLVED METAL RESULTS

Groundwater Dissolved Metals Results

For Wells at Rockwell (Rocky Flats)

ALLUVIAL WELLS AT THE 881 HILLSIDE

Well Number	Date Sampled	Qtr.	Aluminum (Al), diss. mg/l	Antimony (Sb), diss. mg/l	Arsenic (As), diss. mg/l	Barium (Ba), diss. mg/l	Beryllium (Be), diss. mg/l	Cadmium (Cd, diss. mg/l	Calcium (Ca), diss. mg/l
09-74	03/09/87	1	0.0290 U	0.0660 U	0.01 U	0.0840	0.005 U	0.005 U	263.4966
09-74	04/09/87	2	0.0321	0.0600 U	0.01 U	0.1371	0.005 U	0.005 U	199.7978
09-74	05/21/87	2	0.0290 U	0.06 U	0.01 U	0.0693	0.005 U	0.005 U	211.0518
09-74	07/02/87	3	0.0481	0.02 U	0.008 J	0.0918	0.005 U	0.001 U	262.2745
09-74	08/11/87	3	DRY						
09-74	10/20/87	4	0.0515	0.006 J	0.005 U	0.0896	0.001 J	0.001 U	218.1526
09-74	10/28/87	4	INSUFFICIENT SAMPLE FOR METALS ANALYSIS						
09-74	11/17/87	4	0.0690	0.02 U	0.008	0.0994	0.005 U	0.0013	206.2095
09-74	02/25/88	1	0.0290 U	0.02 U	0.005	0.0707	0.05 U	0.001 U	168.2300
09-74	04/14/88	2	0.0290 U	0.0340 U	0.003 J	0.0578	0.0010 U	0.0050 U	170.7388
09-74	04/15/88	2	0.0316	0.0340 U	0.003 J	0.0564	0.0010 U	0.0050 U	169.9513
09-74	07/20/88	3	0.0290 U	0.0647	0.003 J	0.0684	0.0010 U	0.0050 U	185.6921
09-74	10/25/88	4	0.0387	0.0707	0.003 J	0.0849	0.0010 U	0.0050 U	223.2724
10-74	05/21/87	2	0.0469	0.06 U	0.01 U	0.0545	0.005 U	0.005 U	295.0586
10-74	07/04/87	3	DRY						
10-74	10/20/87	4	INSUFFICIENT SAMPLE FOR METAL ANALYSIS						
10-74	10/20/87	4	INSUFFICIENT SAMPLE FOR METAL ANALYSIS						
10-74	02/25/88	1	0.0290 U	0.02 U	0.005 U	0.0451	0.005 U	0.001 U	221.8247
10-74	07/19/88	3	0.0290 U	0.0674	0.005 U	0.0436	0.0010 U	0.0050 U	230.7856

NR = Analyte not reported
J = Present below detection limit
U = Analyzed but not detected
B = Present in laboratory blank
* = Holding time not met
N = Batch spike not in 80-120% range
E = Estimated value

Groundwater Dissolved Metals Results

For Wells at Rockwell (Rocky Flats)

ALLUVIAL WELLS AT THE 881 HILLSIDE

Well Number	Date Sampled	Qtr.	Cesium (Cs), diss. mg/l		Chromium (Cr), diss. mg/l		Cobalt (Co), diss. mg/l		Copper (Cu), diss. mg/l		Iron (Fe), diss. mg/l		Lead (Pb), diss. mg/l		Lithium (Li), diss. mg/l
09-74	03/09/87	1	0.2	U	0.0100	U	0.0220	U	0.0063	U	0.0069	U	0.005	U	NR
09-74	04/09/87	1	0.2	U	0.0100	U	0.0220	U	0.0063	U	0.0069	U	0.005	U	NR
09-74	05/21/87	2	0.2	U	0.0100	U	0.0220	U	0.0063	U	0.0069	U	0.016		NR
09-74	07/02/87	3	0.02	U	0.0100	U	0.0220	U	0.0184		0.0069	U	0.005	U	NR
09-74	08/11/87	3	DRY												
09-74	10/20/87	4	0.02	U	0.0192		0.0220	U	0.0144		0.0447		0.005	U	0.6
09-74	10/28/87	4	INSUFFICIENT SAMPLE FOR METALS ANALYSIS												
09-74	11/17/87	4	0.02	U	0.0139		0.0220	U	0.0165		0.0634		0.0003	J	0.7
09-74	02/25/88	1	0.02	U	0.0100	U	0.0220	U	0.0063	U	0.0069	U	0.005	U	0.44
09-74	04/14/88	2	0.02	U	0.0101		0.0220	U	0.0063	U	0.0069	U	0.005	U	0.44
09-74	04/15/88	2	0.02	U	0.0100	U	0.0220	U	0.0063	U	0.0063	U	0.005	U	0.45
09-74	07/20/88	3	0.020	U	0.0100	U	0.0220	U	0.0063	U	0.0252		0.005	U	NR
09-74	10/25/88	4	0.02	U	0.0100	U	0.0220	U	0.0063	U	0.0173		0.005	U	NR
10-74	05/21/87	2	0.2	U	0.0100	U	0.0200	U	0.0063	U	0.0069	U	0.006		NR
10-74	07/01/87	3	DRY												
10-74	10/20/87	4	INSUFFICIENT SAMPLE FOR METALS ANALYSIS												
10-74	10/20/87	4	INSUFFICIENT SAMPLE FOR METALS ANALYSIS												
10-74	02/25/88	1	0.02	U	0.0118		0.0220	U	0.0063	U	0.0069	U	0.005	U	0.1 U
10-74	07/19/88	3	0.020	U	0.0100	U	0.0220	U	0.0063	U	0.0229		0.005	U	NR

NR = Analyte not reported
J = Present below detection limit
U = Analyzed but not detected
B = Present in laboratory blank
* = Holding time not met
N = Batch spike not in 80-120% range
E = Estimated value

Groundwater Dissolved Metals Results

For Wells at Rockwell (Rocky Flats)

ALLUVIAL WELLS AT THE 881 HILLSIDE

Well Number	Date Sampled	Qtr.	Magnesium (Mg), diss. mg/l	Manganese (Mn), diss. mg/l	Mercury (Hg), diss. mg/l	Molybdenum (Mo), diss. mg/l	Nickel (Ni), diss. mg/l	Potassium (K) diss. mg/l	Selenium (Se), diss. mg/l
09-74	03/09/87	1	55.3301	0.0051 U	0.0002 U	0.0220 U	0.0370 U	5.0 U	0.95
09-74	04/09/87	1	47.0034	0.0075	0.0002 U	0.0220 U	0.0370 U	5.0 U	0.46
09-74	05/21/87	2	44.8732	0.0134	0.0002 U	0.0220 U	0.0370 U	5.0 U	0.39
09-74	07/02/87	3	56.1795	0.0261	0.0002 U	0.0220 U	0.0370 U	2.2	0.9
09-74	08/11/87	3	DRY						
09-74	10/20/87	4	55.1443	0.0394	0.0002 U	0.0220 U	0.0370 U	1.9	0.8
09-74	10/28/87	4	INSUFFICIENT SAMPLE FOR METALS ANALYSIS						
09-74	11/17/87	4	44.2873	0.0145	0.0002 U	0.0220 U	0.0370 U	2.1	0.09
09-74	02/25/88	1	33.0280	0.0051 U	0.0002 U	0.0220 U	0.0370 U	1.1	0.65
09-74	04/14/88	2	40.3688	0.0051 U	0.0002 U	0.0220 U	0.0370 U	1.0	0.568
09-74	04/15/88	2	40.8359	0.0051 U	0.0002 U	0.0220 U	0.0370 U	1.0	0.595
09-74	07/20/88	3	37.0310	0.0051 U	0.0002 U	0.0220 U	0.0370 U	1.0	0.48
09-74	10/25/88	4	50.6784	0.0107	0.0002 U	0.0220 U	0.0370 U	1.7	NR
10-74	05/21/87	2	73.2748	0.0051 U	0.0002 U	0.0252	0.0370 U	5.0 U	2.1
10-74	07/01/87	3	DRY						
10-74	10/20/87	4	INSUFFICIENT SAMPLE FOR METALS ANALYSIS						
10-74	10/20/87	4	INSUFFICIENT SAMPLE FOR METALS ANALYSIS						
10-74	02/25/88	1	55.9821	0.0051 U	0.0002 U	0.0220 U	0.0370 U	0.8	1.94
10-74	07/19/88	3	54.5000	0.0051 U	0.0002 U	0.0220 U	0.0370 U	0.5	2.24

NR = Analyte not reported
J = Present below detection limit
U = Analyzed but not detected
B = Present in laboratory blank
* = Holding time not met
N = Batch spike not in 80-120% range
E = Estimated value

Groundwater Dissolved Metals Results

For Wells at Rockwell (Rocky Flats)

ALLUVIAL WELLS AT THE 881 HILLSIDE

Well Number	Date Sampled	Qtr.	Silver (Ag), diss. mg/l		Sodium (Na), diss. mg/l	Tin (Sn), diss. mg/l	Strontium (Sr), diss. mg/l	Thallium (Tl), diss. mg/l		Vanadium (V) diss. mg/l		Zinc (Zn), diss. mg/l	
09-74	03/09/87	1	0.0094		183.9774	NR	1.9806	0.01	U	0.0240	U	0.06	
09-74	04/09/87	1	0.0076	U	142.7789	NR	1.6165	0.01	U	0.0240	U	0.08	
09-74	05/21/87	2	0.0076	U	152.3863	NR	1.3926	0.01	U	0.0240	U	0.0298	
09-74	07/02/87	3	0.0076	U	187.4977	NR	2.0519	0.01	U	0.0240	U	0.0330	
09-74	08/11/87	3	DRY										
09-74	10/20/87	4	0.0076	U	158.4178	NR	1,8471	0.01	U	0.0240	U	0.0270	
09-74	10/28/87	4	INSUFFICIENT SAMPLE FOR METALS ANALYSIS										
09-74	11/17/87	4	0.0076	U	164.4335	NR	1.6738	0.01	U	0.0240	U	0.0384	
09-74	02/25/88	1	0.0076	U	169.7297	NR	1.2577	0.01	U	0.0240	U	0.0200	U
09-74	04/14/88	2	0.0076	U	153.7531	NR	1.2361	0.01	U	0.0360	U	0.0200	U
09-74	04/15/88	2	0.0076	U	152.4721	NR	1.2363	0.01		0.0360	U	0.0200	U
09-74	07/20/88	3	0.0076	U	171.3543	NR	1.3406	0.010	U	0.0360	U	0.0244	
09-74	10/25/88	4	0.0076	U	173.4861	NR	1.9120	0.01	U	0.0360	U	0.0263	
10-74	05/21/87	2	0.0076	U	204.3915	NR	1.9586	0.01	U	0.0240	U	0.0515	
10-74	07/01/87	3	DRY										
10-74	10/20/87	4	INSUFFICIENT SAMPLE FOR METALS ANALYSIS										
10-74	10/20/87	4	INSUFFICIENT SAMPLE FOR METALS ANALYSIS										
10-74	02/25/88	1	0.0076	U	178.2349	NR	1.7584	0.01	U	0.0240	U	0.0851	
10-74	07/19/88	3	0.0076	U	184.1220	NR	1.7378	0.0100	U	0.0360	U	0.1618	

NR = Analyte not reported
J = Present below detection limit
U = Analyzed but not detected
B = Present in laboratory blank
* = Holding time not met
N = Batch spike not in 80-120% range
E = Estimated value

Groundwater Dissolved Metals Results

For Wells at Rockwell (Rocky Flats)

ALLUVIAL WELLS AT THE 881 HILLSIDE

Well Number	Date Sampled	Qtr.	Aluminum (Al), diss. mg/l		Antimony (Sb), diss. mg/l		Arsenic (As), diss. mg/l		Barium (Ba), diss. mg/l	Beryllium (Be), diss. mg/l		Cadmium (Cd), diss. mg/l		Calcium (Ca), diss. mg/l
10-74	10/25/88	4	0.0385		0.0798		0.005	U	0.0477	0.0010	U	0.0050	U	220.1902
01-87	10/12/87	4	DRY											
01-87	02/10/88	1	INSUFFICIENT SAMPLE FOR METALS ANALYSIS											
01-87	04/11/88	1	DRY											
01-87	04/11/88	2	DRY											
01-87	07/20/88	3	INSUFFICIENT SAMPLE FOR METALS ANALYSIS											
01-87	10/26/88	4	INSUFFICIENT SAMPLE FOR METALS ANALYSIS											
04-87	05/20/87	1	NR		0.06	U	0.01	U	NR	NR		0.005	U	NR
04-87	05/26/87	2	INSUFFICIENT SAMPLE METALS ANALYSIS											
04-87	07/09/87	3	0.0417		0.02	U	0.005	U	0.0941	0.005	U	0.0005	J	355.9960
04-87	10/14/87	4	0.0712		0.02	U	0.005	U	0.0594	0.001	J	0.001	U	235.0496
04-87	10/14/87	4	INSUFFICIENT SAMPLE METALS ANALYSIS											
04-87	02/15/88	1	0.0290	U	0.02	U	0.003	J	0.0579	0.005	U	0.001		229.9842
04-87	04/13/88	2	0.0431		0.0340	U	0.005	U	0.0382	0.0010	U	0.0050	U	244.3146
04-87	07/14/88	3	0.0290		0.0731		0.005	U	0.0403	0.0010	U	0.0050	U	198.5473
04-87	10/20/88	4	0.0562		0.0636		0.005	U	0.0546	0.0010	U	0.0050	U	121.7639

NR = Analyte not reported
J = Present below detection limit
U = Analyzed but not detected
B = Present in laboratory blank
* = Holding time not met
N = Batch spike not in 80-120% range
E = Estimated value

Groundwater Dissolved Metals Results

For Wells at Rockwell (Rocky Flats)

ALLUVIAL WELLS AT THE 881 HILLSIDE

Well Number	Date Sampled	Qtr.	Cesium (Cs), diss. mg/l	Chromium (Cr), diss. mg/l	Cobalt (Co), diss. mg/l	Copper (Cu), diss. mg/l	Iron (Fe), diss. mg/l	Lead (Pb), diss. mg/l	Lithium (Li), diss. mg/l
10-74	10/25/88	4	NR	0.0100 U	0.0220 U	0.0063 U	0.0069 U	NR	NR
01-87	10/12/87	4	DRY						
01-87	02/10/88	1	INSUFFICIENT SAMPLE FOR METALS ANALYSIS						
01-87	04/11/88	1	DRY						
01-87	04/11/88	2	DRY						
01-87	07/20/88	3	INSUFFICIENT SAMPLE FOR METALS ANALYSIS						
01-87	10/26/88	4	INSUFFICIENT SAMPLE FOR METALS ANALYSIS						
04-87	05/20/87	1	0.2 U	NR	NR	NR	NR	0.005 U	0.02
04-87	05/26/87	2	INSUFFICIENT SAMPLE METALS ANALYSIS						
04-87	07/09/87	3	0.02 U	0.0100 U	0.0220 U	0.0190	0.0069 U	0.005 U	NR
04-87	10/14/87	4	0.04 J	0.0782	0.0220 U	0.0063 U	0.1119	0.005 U	0.03 J
04-87	10/14/87	4	INSUFFICIENT SAMPLE METALS ANALYSIS						
04-87	02/15/88	1	0.02 U	0.0114	0.0220 U	0.0069	0.0069 U	0.005 U	0.1 U
04-87	04/13/88	2	0.02 U	0.0111	0.0220 U	0.0063 U	0.0238	0.005 U	0.1 U

NR = Analyte not reported
J = Present below detection limit
U = Analyzed but not detected
B = Present in laboratory blank
* = Holding time not met
N = Batch spike not in 80-120% range
E = Estimated value

Groundwater Dissolved Metals Results

For Wells at Rockwell (Rocky Flats)

ALLUVIAL WELLS AT THE 881 HILLSIDE

Well Number	Date Sampled	Qtr.	Magnesium (Mg), diss. mg/l	Manganese (Mn), diss. mg/l	Mercury (Hg), diss. mg/l	Molybdenum (Mo), diss. mg/l	Nickel (Ni), diss. mg/l	Potassium (K), diss. mg/l	Selenium (Se), diss. mg/l
10-74	10/25/88	4	56.0077	0.0051 U	0.0002 U	0.0220 U	0.0370 U	1.2	3.2
01-87	10/12/87	4	DRY						
01-87	02/10/88	1	INSUFFICIENT SAMPLE FOR METALS ANALYSIS						
01-87	04/11/88	1	DRY						
01-87	04/11/88	2	DRY						
01-87	07/20/88	3	INSUFFICIENT SAMPLE FOR METALS ANALYSIS						
01-87	10/26/88	4	INSUFFICIENT SAMPLE FOR METALS ANALYSIS						
04-87	05/20/87	1	NR	NR	0.0002 U	NR	NR	5.0 U	0.193
04-87	05/26/87	2	INSUFFICIENT SAMPLE METALS ANALYSIS						
04-87	07/09/87	3	69.8038	0.5871	0.0002 U	0.0220 U	0.2536		.23
04-87	10/14/87	4	49.5140	0.9586	0.0002 U	0.0220 U	0.3334	1	
04-87	10/14/87	4	INSUFFICIENT SAMPLE METALS ANALYSIS						
04-87	02/15/88	1	52.0792	0.3658	0.0002 U	0.0220 U	0.2025		
04-87	04/13/88	2	61.3284	0.2400	0.0002 U	0.0220 U	0.1800		
04-87	07/14/88	3	38.8750	0.7619	0.0002* U	0.0220 U	0.4037		
04-87	10/20/88	4	25.6060	0.7016	0.0002 U	0.0220 U	0.3093		

NR = Analyte not reported
J = Present below detection limit
U = Analyzed but not detected
B = Present in laboratory blank
* = Holding time not met
N = Batch spike not in 80-120% range
E = Estimated value

Groundwater Dissolved Metals Results

For Wells at Rockwell (Rocky Flats)

ALLUVIAL WELLS AT THE 881 HILLSIDE

Well Number	Date Sampled	Qtr.	Silver (Ag), diss. mg/l	Sodium (Na), diss. mg/l	Tin (Sn), diss. mg/l	Strontium (Sr),diss. mg/l	Thallium (Tl), diss. mg/l	Vanadium (V), diss. mg/l	Zinc (Zn), diss. mg/l
10-74	10/25/88	4	0.0076 U	185.9507	NR	1.8795	NR	0.0360 U	0.2376
01-87	10/12/87	4	DRY						
01-87	02/10/88	1	INSUFFICIENT SAMPLE FOR METALS ANALYSIS						
01-87	04/11/88	1	DRY						
01-87	04/11/88	2	DRY						
01-87	07/20/88	3	INSUFFICIENT SAMPLE FOR METALS ANALYSIS						
01-87	10/26/88	4	INSUFFICIENT SAMPLE FOR METALS ANALYSIS						
04-87	05/20/87	1	NR	NR	NR	NR	0.01 U	NR	0.16
04-87	05/26/87	2	INSUFFICIENT SAMPLE METALS ANALYSIS						
04-87	07/09/87	3	0.0076 U	341.7467	NR	2.4291	0.01 U	0.0302	0.0780
04-87	10/14/87	4	0.0076 U	281.9918	NR	1.6890	0.01 U	0.0240 U	0.0314
04-87	10/14/87	4	INSUFFICIENT SAMPLE METALS ANALYSIS						
04-87	02/15/88	1	0.0076 U	265.3521	NR	1.6772	0.01 U	0.0240 U	0.0359
04-87	04/13/88	2	0.0076 U	258.3427	NR	1.5743	0.01 U	0.0360 U	0.0426 U
04-87	07/14/88	3	0.0076 U	239.5536	NR	1.3338	0.010 U	0.0360 U	0.0496
04-87	10/20/88	4	0.0076N U	202.3517	NR	0.9184	0.01 U	0.0360 U	0.0285

NR = Analyte not reported
J = Present below detection limit
U = Analyzed but not detected
B = Present in laboratory blank
* = Holding time not met
N = Batch spike not in 80-120% range
E = Estimated value

Groundwater Dissolved Metals Results

For Wells at Rockwell (Rocky Flats)

ALLUVIAL WELLS AT THE 881 HILLSIDE

Well Number	Date Sampled	Qtr.	Aluminum (Al), diss. mg/l	Antimony (Sb), diss. mg/l	Arsenic (As), diss. mg/l	Barium (Ba), diss. mg/l	Beryllium (Be), diss. mg/l	Cadmium (Cd), diss. mg/l	Calcium (Ca), diss. mg/l
06-87	07/30/87	3	0.0290 U	0.02 U	0.005 U	0.1634	0.005 U	0.001 U	148.9176
06-87	08/25/87	3	INSUFFICIENT SAMPLE FOR METALS ANALYSIS						
06-87	10/14/87	4	INSUFFICIENT SAMPLE FOR METALS ANALYSIS						
06-87	10/14/87	4	INSUFFICIENT SAMPLE FOR METALS ANALYSIS						
06-87	02/17/88	1	0.0304	0.02 U	0.005 U	0.1047	0.005 U	0.001 U	156.2052
06-87	04/13/88	2	INSUFFICIENT SAMPLE FOR METALS ANALYSIS						
06-87	07/14/88	3	INSUFFICIENT SAMPLE FOR METALS ANALYSIS						
06-87	10/26/88	4	DRY						
43-87	12/18/87	4	0.0765	0.02 U	0.009	0.1129	0.003 J	0.001 U	157.5883
43-87	02/22/88	1	0.0290 U	0.02 U	0.003 J	0.0898	0.005 U	0.001 J	168.2474
43-87	04/11/88	2	0.0367	0.0340 U	0.005 U	0.0581	0.0010 U	0.0050 U	158.8623
43-87	07/20/88	3	0.0290 U	0.0496	0.005 U	0.0733	0.0010 U	0.0050 U	177.2322
43-87	10/17/88	4	INSUFFICIENT SAMPLE FOR METALS ANALYSIS						
44-87	11/14/87	4	DRY						
44-87	02/22/88	1	DRY						

NR = Analyte not reported
J = Present below detection limit
U = Analyzed but not detected
B = Present in laboratory blank
* = Holding time not met
N = Batch spike not in 80-120% range
E = Estimated value

Groundwater Dissolved Metals Results

For Wells at Rockwell (Rocky Flats)

ALLUVIAL WELLS AT THE 881 HILLSIDE

Well Number	Date Sampled	Qtr.	Cesium (Cs), diss. mg/l	Chromium (Cr), diss. mg/l	Cobalt (Co), diss. mg/l	Copper (Cu), diss. mg/l	Iron (Fe), diss. mg/l	Lead (Pb), diss. mg/l	Lithium (Li), diss. mg/l
06-87	07/30/87	3	0.02 U	0.100 U	0.0220 U	0.0078	0.1739	0.005 U	NR
06-87	08/25/87	3	INSUFFICIENT SAMPLE FOR METALS ANALYSIS						
06-87	10/14/87	4	INSUFFICIENT SAMPLE FOR METALS ANALYSIS						
06-87	10/14/87	4	INSUFFICIENT SAMPLE FOR METALS ANALYSIS						
06-87	02/17/88	1	0.02 U	0.0100 U	0.0220 U	0.0081	0.0069 U	0.005 U	0.06 J
06-87	04/13/88	2	INSUFFICIENT SAMPLE FOR METALS ANALYSIS						
06-87	07/14/88	3	INSUFFICIENT SAMPLE FOR METALS ANALYSIS						
06-87	10/26/88	4	DRY						
43-87	12/18/87	4	0.02 U	0.0127	0.0220 U	0.0364	0.0526	0.005 U	0.1 U
43-87	02/22/88	1	0.02 U	0.0100 U	0.0220 U	0.9515	0.0181	0.003 U	0.05 J
43-87	04/11/88	2	0.02 U	0.0100 U	0.0220 U	0.9053	0.0113	0.005 U	0.05 J
43-87	07/20/88	3	0.020 U	0.0100 U	0.0220 U	0.1612	0.0171	0.005 U	NR
43-87	10/17/88	4	INSUFFICIENT SAMPLE FOR METALS ANALYSIS						
44-87	11/14/87	4	DRY						
44-87	02/22/88	1	DRY						

NR = Analyte not reported
J = Present below detection limit
U = Analyzed but not detected
B = Present in laboratory blank
* = Holding time not met
N = Batch spike not in 80-120% range
E = Estimated value

Groundwater Dissolved Metals Results

For Wells at Rockwell (Rocky Flats)

ALLUVIAL WELLS AT THE 881 HILLSIDE

Well Number	Date Sampled	Qtr.	Magnesium (Mg), diss. mg/l	Manganese (Mn), diss. mg/l	Mercury (Hg), diss. mg/l	Molybdenum (Mo), diss. mg/l	Nickel (Ni), diss. mg/l	Potassium (k), diss. mg/l	Selenium (Se), diss. mg/l
06-87	07/30/87	3	40.7284	0.0465	0.0003	0.0220 U	0.2691	2.4	0.02
06-87	08/25/87	3	INSUFFICIENT SAMPLE FOR METALS ANALYSIS						
06-87	10/14/87	4	INSUFFICIENT SAMPLE FOR METALS ANALYSIS						
06-87	10/14/87	4	INSUFFICIENT SAMPLE FOR METALS ANALYSIS						
06-87	02/17/88	1	48.0232	0.2698	0.0002 U	0.0220 U	0.2847	2.5	0.015
06-87	04/13/88	2	INSUFFICIENT SAMPLE FOR METALS ANALYSIS						
06-87	07/14/88	3	INSUFFICIENT SAMPLE FOR METALS ANALYSIS						
06-87	10/26/88	4	DRY						
43-87	12/18/87	4	30.8697	0.1097	0.0002 U	0.0220 U	0.1579	7.2	0.51
43-87	02/22/88	1	35.2978	0.0918	0.0002 U	0.0220 U	0.6079	5.5	0.5
43-87	04/11/88	2	37.5773	0.0843	0.0002 U	0.0265	0.8644	4.5	0.424
43-87	07/20/88	3	34.4470	0.2523	0.0002 U	0.0220 U	0.3607	2.8	0.395
43-87	10/17/88	4	INSUFFICIENT SAMPLE FOR METALS ANALYSIS						
44-87	11/14/87	4	DRY						
44-87	02/22/88	1	DRY						

NR = Analyte not reported
J = Present below detection limit
U = Analyzed but not detected
B = Present in laboratory blank
* = Holding time not met
N = Batch spike not in 80-120% range
E = Estimated value

Groundwater Dissolved Metals Results

For Wells at Rockwell (Rocky Flats)

ALLUVIAL WELLS AT THE 881 HILLSIDE

Well Number	Date Sampled	Qtr.	Silver (Ag), diss. mg/l	Sodium (Na), diss. mg/l	Tin (Sn), diss. mg/l	Strontium (Sr), diss. mg/l	Thallium (Tl), diss. mg/l	Vanadium (V), diss. mg/l	Zinc (Zn), diss. mg/l
06-87	07/30/87	3	0.0076 U	211.6911	NR	1.3294	0.01 U	0.0240 U	0.0200 U
06-87	08/25/87	3	INSUFFICIENT SAMPLE FOR METALS ANALYSIS						
06-87	10/14/87	4	INSUFFICIENT SAMPLE FOR METALS ANALYSIS						
06-87	10/14/87	4	INSUFFICIENT SAMPLE FOR METALS ANALYSIS						
06-87	02/17/88	1	0.0076 U	218.7943	NR	1.5303	0.01 U	0.0240 U	0.0200
06-87	04/13/88	2	INSUFFICIENT SAMPLE FOR METALS ANALYSIS						
06-87	07/14/88	3	INSUFFICIENT SAMPLE FOR METALS ANALYSIS						
06-87	10/26/88	4	DRY						
43-87	12/18/87	4	0.0076 U	180.9535	NR	1.3286	0.01 U	0.0240 U	0.5827
43-87	02/22/88	1	0.0076 U	191.2084	NR	1.4910	0.01 U	0.0240 U	2.1306
43-87	04/11/88	2	0.0076 U	165.6124	NR	1.2759	0.01 U	0.0360 U	2.4500
43-87	07/20/88	3	0.0076 U	180.0329	NR	1.3836	0.010 U	0.0360 U	0.8048
43-87	10/17/88	4	INSUFFICIENT SAMPLE FOR METALS ANALYSIS						
44-87	11/14/87	4	DRY						
44-87	02/22/88	1	DRY						

NR = Analyte not reported
J = Present below detection limit
U = Analyzed but not detected
B = Present in laboratory blank
* = Holding time not met
N = Batch spike not in 80-120% range
E = Estimated value

Groundwater Dissolved Metals Results

For Wells at Rockwell (Rocky Flats)

ALLUVIAL WELLS AT THE 881 HILLSIDE

Well Number	Date Sampled	Qtr.	Aluminum (Al), diss. mg/l	Antimony (Sb), diss. mg/l	Arsenic (As), diss. mg/l	Barium (Ba), diss. mg/l	Beryllium (Be), diss. mg/l	Cadmium (Cd), diss. mg/l	Calcium (Ca), diss. mg/l
44-87	04/18/88	2	DRY						
44-87	07/20/88	3	DRY						
44-87	10/26/88	4	DRY						
49-87	11/18/87	4	DRY						
49-87	02/17/88	1	DRY						
49-87	04/13/88	2	DRY						
49-87	04/13/88	2	DRY						
49-87	07/18/88	3	DRY						
49-87	10/21/88	4	DRY						
50-87	11/18/87	4	INSUFFICIENT SAMPLE FOR METALS ANALYSIS						
50-87	11/18/87	4	INSUFFICIENT SAMPLE FOR METALS ANALYSIS						
50-87	02/17/88	1	DRY						
50-87	04/13/88	2	DRY						
50-87	07/18/88	3	DRY						
50-87	10/21/88	4	DRY						

NR = Analyte not reported
J = Present below detection limit
U = Analyzed but not detected
B = Present in laboratory blank
* = Holding time not met
N = Batch spike not in 80-120% range
E = Estimated value

Groundwater Dissolved Metals Results

For Wells at Rockwell (Rocky Flats)

ALLUVIAL WELLS AT THE 881 HILLSIDE

Well Number	Date Sampled	Qtr.	Cesium (Cs), diss. mg/l	Chromium (Cr), diss. mg/l	Cobalt (Co), diss. mg/l	Copper (Cu), diss. mg/l	Iron (Fe), diss. mg/l	Lead (Pb), diss. mg/l	Lithium (Li), diss. mg/l
44-87	04/18/88	2	DRY						
44-87	07/20/88	3	DRY						
44-87	10/26/88	4	DRY						
49-87	11/18/87	4	DRY						
49-87	02/17/88	1	DRY						
49-87	04/13/88	2	DRY						
49-87	04/13/88	2	DRY						
49-87	07/18/88	3	DRY						
49-87	10/21/88	4	DRY						
50-87	11/18/87	4	INSUFFICIENT SAMPLE FOR METALS ANALYSIS						
50-87	11/18/87	4	INSUFFICIENT SAMPLE FOR METALS ANALYSIS						
50-87	02/17/88	1	DRY						
50-87	04/13/88	2	DRY						
50-87	07/18/88	3	DRY						
50-87	10/21/88	4	DRY						

NR = Analyte not reported
J = Present below detection limit
U = Analyzed but not detected
B = Present in laboratory blank
* = Holding time not met
N = Batch spike not in 80-120% range
E = Estimated value

Groundwater Dissolved Metals Results

For Wells at Rockwell (Rocky Flats)

ALLUVIAL WELLS AT THE 881 HILLSIDE

Well Number	Date Sampled	Qtr.	Magnesium (Mg), diss. mg/l	Manganese (Mn), diss. mg/l	Mercury (Hg), diss. mg/l	Molybdenum (Mo), diss. mg/l	Nickel (Ni), diss. mg/l	Potassium (K), diss. mg/l	Selenium (Se), diss. mg/l
44-87	04/18/88	2	DRY						
44-87	07/20/88	3	DRY						
44-87	10/26/88	4	DRY						
49-87	11/18/87	4	DRY						
49-87	02/17/88	1	DRY						
49-87	04/13/88	2	DRY						
49-87	04/13/88	2	DRY						
49-87	07/18/88	3	DRY						
49-87	10/21/88	4	DRY						
50-87	11/18/87	4	INSUFFICIENT SAMPLE FOR METALS ANALYSIS						
50-87	11/18/87	4	INSUFFICIENT SAMPLE FOR METALS ANALYSIS						
50-87	02/17/88	1	DRY						
50-87	04/13/88	2	DRY						
50-87	07/18/88	3	DRY						
50-87	10/21/88	4	DRY						

NR = Analyte not reported
J = Present below detection limit
U = Analyzed but not detected
B = Present in laboratory blank
* = Holding time not met
N = Batch spike not in 80-120% range
E = Estimated value

Groundwater Dissolved Metals Results

For Wells at Rockwell (Rocky Flats)

ALLUVIAL WELLS AT THE 881 HILLSIDE

Well Number	Date Sampled	Qtr.	Silver (Ag), diss. mg/l	Sodium (Na), diss. mg/l	Tin (Sn), diss. mg/l	Strontium (Sr), diss. mg/l	Thallium (Tl), diss. mg/l	Vanadium (V), diss. mg/l	Zinc (Zn), diss. mg/l
44-87	04/18/88	2	DRY						
44-87	07/20/88	3	DRY						
44-87	10/26/88	4	DRY						
49-87	11/18/87	4	DRY						
49-87	02/17/88	1	DRY						
49-87	04/13/88	2	DRY						
49-87	04/13/88	2	DRY						
49-87	07/18/88	3	DRY						
49-87	10/21/88	4	DRY						
50-87	11/18/87	4	INSUFFICIENT SAMPLE FOR METALS ANALYSIS						
50-87	11/18/87	4	INSUFFICIENT SAMPLE FOR METALS ANALYSIS						
50-87	02/17/88	1	DRY						
50-87	04/13/88	2	DRY						
50-87	07/18/88	3	DRY						
50-87	10/21/88	4	DRY						

NR = Analyte not reported
J = Present below detection limit
U = Analyzed but not detected
B = Present in laboratory blank
* = Holding time not met
N = Batch spike not in 80-120% range
E = Estimated value

Groundwater Dissolved Metals Results

For Wells at Rockwell (Rocky Flats)

ALLUVIAL WELLS AT THE 881 HILLSIDE

Well Number	Date Sampled	Qtr.	Aluminum (Al), diss. mg/l	Antimony (Sb), diss. mg/l	Arsenic (As), diss. mg/l	Barium (Ba), diss. mg/l	Beryllium (Be), diss. mg/l	Cadmium (Cd), diss. mg/l	Calcium (Ca), diss. mg/l
51-87	11/23/87	4	DRY						
51-87	02/12/88	1	DRY						
51-87	04/18/88	2	DRY						
51-87	07/18/88	3	DRY						
51-87	10/21/88	4	DRY						
52-87	11/23/87	4	0.0503	0.02 U	0.005 U	0.1774	0.005 U	0.003 J	85.6972
52-87	11/23/87	4	INSUFFICIENT SAMPLE FOR METALS ANALYSIS						
52-87	02/12/88	1	0.0290 U	0.02 U	0.003 J	0.1561	0.005 U	0.001 U	104.3593
52-87	04/18/88	2	0.0321	0.0340 U	0.005 U	0.1202	0.0010 U	0.0050 U	110.5478
52-87	07/18/88	3	0.0290 U	0.0463	0.005 U	0.1405	0.0010 U	0.0050 U	113.3889
52-87	10/18/88	4	0.0377	0.0627	0.005 U	0.1436	0.0010 U	0.0050 U	106.9126
53-87	11/18/87	4	INSUFFICIENT SAMPLE FOR METALS ANALYSIS						
53-87	11/18/87	4	INSUFFICIENT SAMPLE FOR METALS ANALYSIS						
53-87	02/10/88	1	DRY						
53-87	04/11/88	2	INSUFFICIENT SAMPLE FOR METALS ANALYSIS						

NR = Analyte not reported
J = Present below detection limit
U = Analyzed but not detected
B = Present in laboratory blank
* = Holding time not met
N = Batch spike not in 80-120% range
E = Estimated value

Groundwater Dissolved Metals Results

For Wells at Rockwell (Rocky Flats)

ALLUVIAL WELLS AT THE 881 HILLSIDE

Well Number	Date Sampled	Qtr.	Cesium (Cs), diss. mg/l	Chromium (Cr), diss. mg/l	Cobalt (Co), diss. mg/l	Copper (Cu), diss. mg/l	Iron (Fe), diss. mg/l	Lead (Pb), diss. mg/l	Lithium (Li), diss. mg/l
51-87	11/23/87	4	DRY						
51-87	02/12/88	1	DRY						
51-87	04/18/88	2	DRY						
51-87	07/18/88	3	DRY						
51-87	10/21/88	4	DRY						
52-87	11/23/87	4	0.02 U	0.0100 U	0.0220 U	0.0244	0.0209	NR	NR
52-87	11/23/87	4	INSUFFICIENT SAMPLE FOR METALS ANALYSIS						
52-87	02/12/88	1	0.02 U	0.0100 U	0.0220 U	0.0063 U	0.0069 U	0.005 U	0.01 U
52-87	04/18/88	2	0.02 U	0.0100 U	0.0220 U	0.0087	0.0187	0.005 U	0.01 U
52-87	07/18/88	3	0.020 U	0.0100 U	0.0220 U	0.0310	0.0215	0.005 U	NR
52-87	10/18/88	4	0.02 U	0.0100 U	0.0220 U	0.0366	0.0291	0.005 U	NR
53-87	11/18/87	4	INSUFFICIENT SAMPLE FOR METALS ANALYSIS						
53-87	11/18/87	4	INSUFFICIENT SAMPLE FOR METALS ANALYSIS						
53-87	02/10/88	1	DRY						
53-87	04/11/88	2	INSUFFICIENT SAMPLE FOR METALS ANALYSIS						

NR = Analyte not reported
J = Present below detection limit
U = Analyzed but not detected
B = Present in laboratory blank
* = Holding time not met
N = Batch spike not in 80-120% range
E = Estimated value

Groundwater Dissolved Metals Results

For Wells at Rockwell (Rocky Flats)

ALLUVIAL WELLS AT THE 881 HILLSIDE

Well Number	Date Sampled	Qtr.	Magnesium (Mg), diss. mg/l	Manganese (Mn), diss. mg/l	Mercury (Hg), diss. mg/l	Molybdenum (Mo), diss. mg/l	Nickel (Ni), diss. mg/l	Potassium (K), diss. mg/l	Selenium (Se), diss. mg/l
51-87	11/23/87	4	DRY						
51-87	02/12/88	1	DRY						
51-87	04/18/88	2	DRY						
51-87	07/18/88	3	DRY						
51-87	10/21/88	4	DRY						
52-87	11/23/87	4	19.5478	0.2171	0.0002 U	0.0220 U	0.0401	NR	0.005 U
52-87	11/23/87	4	INSUFFICIENT SAMPLE FOR METALS ANALYSIS						
52-87	02/12/88	1	25.0742	0.7556	0.0220 U	0.0220 U	0.0370 U	3.2	0.005 U
52-87	04/18/88	2	31.2190	0.4838	0.0220 U	0.0220 U	0.0370 U	2.3	0.003 U
52-87	07/18/88	3	31.6869	0.5079	NR	0.0220 U	0.1102	1.8	0.005 U
52-87	10/18/88	4	26.1864	0.7057	0.0220 U	0.0220 U	0.0504	1.6	0.005 U
53-87	11/18/87	4	INSUFFICIENT SAMPLE FOR METALS ANALYSIS						
53-87	11/18/87	4	INSUFFICIENT SAMPLE FOR METALS ANALYSIS						
53-87	02/10/88	1	DRY						
53-87	04/11/88	2	INSUFFICIENT SAMPLE FOR METALS ANALYSIS						

NR = Analyte not reported
J = Present below detection limit
U = Analyzed but not detected
B = Present in laboratory blank
* = Holding time not met
N = Batch spike not in 80-120% range
E = Estimated value

Groundwater Dissolved Metals Results
For Wells at Rockwell (Rocky Flats)

ALLUVIAL WELLS AT THE 881 HILLSIDE

Well Number	Date Sampled	Qtr.	Silver (Ag), Diss. mg/l	Sodium (Na), diss. mg/l	Tin (Sn), diss. mg/l	Strontium (Sr), diss. mg/l	Thallium (TL), diss. mg/l	Vanadium (V), diss. mg/l	Zinc (Zn),diss. mg/l
51-87	11/23/87	4	DRY						
51-87	02/12/88	1	DRY						
51-87	04/18/88	2	DRY						
51-87	07/18/88	3	DRY						
51-87	10/21/88	4	DRY						
52-87	11/23/87	4	0.0076 U	124.7997	NR	0.7136	0.01 U	0.0240 U	0.0252
52-87	11/23/87	4	INSUFFICIENT SAMPLE FOR METALS ANALYSIS						
52-87	02/12/88	1	0.0076 U	166.3747	NR	0.8222	0.01 U	0.0240 U	0.0414
52-87	04/18/88	2	0.0076 U	164.5510	NR	0.8149	0.01 U	0.0360 U	0.0717
52-87	07/18/88	3	0.0076 U	173.5700	NR	0.8154	0.010 U	0.0360 U	0.2643
52-87	10/18/88	4	0.0076N U	184.7438	NR	0.7910	0.01 U	0.0360 U	0.1537
53-87	11/18/87	4	INSUFFICIENT SAMPLE FOR METALS ANALYSIS						
53-87	11/18/88	4	INSUFFICIENT SAMPLE FOR METALS ANALYSIS						
53-87	02/10/88	1	DRY						
53-87	04/11/88	2	INSUFFICIENT SAMPLE FOR METALS ANALYSIS						

NR = Analyte not reported
J = Present below detection limit
U = Analyzed but not detected
B = Present in laboratory blank
* = Holding time not met
N = Batch spike not in 80-120% range
E = Estimated value

Groundwater Dissolved Metals Results

For Wells at Rockwell (Rocky Flats)

ALLUVIAL WELLS AT THE 881 HILLSIDE

Well Number	Date Sampled	Qtr.	Aluminum (AL), diss. mg/l	Antimony (Sb), diss. mg/l	Arsenic (As), diss. mg/l	Barium (Ba), diss. mg/l	Beryllium (Be), diss. mg/l	Cadmium (Cd), diss. mg/l	Calcium (Ca), diss. mg/l
53-87	07/18/88	3	DRY						
53-87	10/21/88	4	DRY						
54-87	11/18/87	4	INSUFFICIENT SAMPLE FOR METALS ANALYSIS						
54-87	11/18/87	4	INSUFFICIENT SAMPLE FOR METALS ANALYSIS						
54-87	11/18/87	4	INSUFFICIENT SAMPLE FOR METALS ANALYSIS						
54-87	02/10/88	1	DRY						
54-87	04/11/88	2	INSUFFICIENT SAMPLE FOR METALS ANALYSIS						
54-87	07/18/88	3	DRY						
54-87	10/21/88	4	DRY						

NR = Analyte not reported
J = Present below detection limit
U = Analyzed but not detected
B = Present in laboratory blank
* = Holding time not met
N = Batch spike not in 80-120% range
E = Estimated value

Groundwater Dissolved Metals Results

For Wells at Rockwell (Rocky Flats)

ALLUVIAL WELLS AT THE 881 HILLSIDE

Well Number	Data Sampled	Qtr.	Cesium (Cs), diss. mg/l	Chromium (Cr), diss. mg/l	Cobalt (C0), diss. mg/l	Copper (Cu), diss. mg/l	Iron (Fe), diss. mg/l	Lead (Pb), diss. mg/l	Lithium (Li), diss. mg/l
53-87	07/18/88	3	DRY						
53-87	10/21/88	4	DRY						
54-87	11/18/87	4	INSUFFICIENT SAMPLE FOR METALS ANALYSIS						
54-87	11/18/87	4	INSUFFICIENT SAMPLE FOR METALS ANALYSIS						
54-87	11/18/87	4	INSUFFICIENT SAMPLE FOR METALS ANALYSIS						
54-87	02/10/88	1	DRY						
54-87	04/11/88	2	INSUFFICIENT SAMPLE FOR METALS ANALYSIS						
54-87	07/18/88	3	DRY						
54-87	10/21/88	4	DRY						

NR = Analyte not reported
J = Present below detection limit
U = Analyzed but not detected
B = Present in laboratory blank
* = Holding time not met
N = Batch spike not in 80-120% range
E = Estimated value

Ground Dissolved Metals Results

For Wells at Rockwell (Rocky Flats)

ALLUVIAL WELLS AT THE 881 HILLSIDE

Well Number	Data Sampled	Qtr.	Magnesium (Mg), diss. mg/l	Manganese (Mn), diss. mg/l	Mercury (Hg), diss. mg/l	Molybdenum (Mo), diss. mg/l	Nickel (Ni), diss. mg/l	Potassium (K), diss. mg/l	Selenium (Se), diss. mg/l
53-87	07/18/88	3	DRY						
53-87	10/21/88	4	DRY						
54-87	11/18/87	4	INSUFFICIENT SAMPLE FOR METALS ANALYSIS						
54-87	11/18/87	4	INSUFFICIENT SAMPLE FOR METALS ANALYSIS						
54-87	11/18/87	4	INSUFFICIENT SAMPLE FOR METALS ANALYSIS						
54-87	02/10/88	1	DRY						
54-87	04/11/88	2	INSUFFICIENT SAMPLE FOR METALS ANALYSIS						
54-87	07/18/88	3	DRY						
54-87	10/21/88	4	DRY						

NR = Analyte not reported
J = Present below detection limit
U = Analyzed but not detected
B = Present in laboratory blank
* = Holding time not met
N = Batch spike not in 80-120% range
E = Estimated value

Groundwater Dissolved Metals Results

For Wells at Rockwell (Rocky Flats)

ALLUVIAL WELLS AT THE 881 HILLSIDE

Well Number	Data Sampled	Qtr.	Silver (Ag), diss. mg/l	Sodium (Na), diss. mg/l	Tin (Sn), diss. mg/l	Strontium (Sr), diss. mg/l	Thallium (Tl), diss. mg/l	Vanadium (V), diss. mg/l	Zinc (Zn), diss. mg/l
53-87	07/18/88	3	DRY						
53-87	10/21/88	4	DRY						
54-87	11/18/87	4	INSUFFICIENT SAMPLE FOR METALS ANALYSIS						
54-87	11/18/87	4	INSUFFICIENT SAMPLE FOR METALS ANALYSIS						
54-87	11/18/87	4	INSUFFICIENT SAMPLE FOR METALS ANALYSIS						
54-87	02/10/88	1	DRY						
54-87	04/11/88	2	INSUFFICIENT SAMPLE FOR METALS ANALYSIS						
54-87	07/18/88	3	DRY						
54-87	10/21/88	4	DRY						

NR = Analyte not reported
J = Present below detection limit
U = Analyzed but not detected
B = Present in laboratory blank
* = Holding time not met
N = Batch spike not in 80-120% range
E = Estimated value

ALLUVIAL WELLS AT THE 881 HILLSIDE

INORGANIC COMPOUND RESULTS

Groundwater Inorganic Results
For Wells at Rockwell (Rocky Flats)

ALLUVIAL WELLS AT THE 881 HILLSIDE

Wells Number	Date Sampled	Qtr.	Total Dissolved Solids MG/L	Chloride MG/L	Nitrate+ Nitrite-Nitrogen MG/L	Sulfate MG/L	HC03- MG/L
09-74	03/09/87	1	1536	378	34.0	173	231
09-74	04/09/87	1	1176	294	8.80	180	244
09-74	05/21/87	2	1313	276	7.60	235	253
09-74	07/02/87	3	1445	304	10.0	300	258
09-74	08/11/87	3	DRY				
09-74	10/20/87	4	1588	449	26.8	213	256
09-74	10/28/87	4	INSUFFICIENT SAMPLE FOR INORGANIC ANALYSIS				
09-74	11/17/87	4	INSUFFICIENT SAMPLE FOR INORGANIC ANALYSIS				
09-74	02/25/88	1	1253	250	8.67	230	161
09-74	04/14/88	2	1189	221	7.57	273	264
09-74	04/15/88	2	1188	224	7.62	268	241
09-74	07/20/88	3	1231	290	9.78	300	272
09-74	10/25/88	4	1516	369	32.7	239	226
10-74	05/21/87	2	1833	355	55	358	284
10-74	07/01/87	3	DRY				
10-74	10/20/87	4	INSUFFICIENT SAMPLE FOR INORGANIC ANALYSIS				
10-74	10/20/87	4	INSUFFICIENT SAMPLE FOR INORGANIC ANALYSIS				
10-74	02/25/88	1	1646	314	36.7	311	165
10-74	07/19/88	3	1530	325	44.7	313	269
10-74	10/25/88	4	1462	302	40.3	282	255

Notes: NR = Analyte not reported
J = Present below detection limit
U = Analyzed not detected
B = Present in laboratory blank

Groundwater Inorganic Results
For Wells at Rockwell (Rocky Flats)

ALLUVIAL WELLS AT THE 881 HILLSIDE

Wells Number	Date Sampled	Qtr.	Total Dissolved Solids MG/L	Chloride MG/L	Nitrate+ Nitrite-Nitrogen MG/L	Sulfate MG/L	HCO3- MG/L
01-87	10/12/87	4	DRY				
01-87	02/10/88	1	INSUFFICIENT SAMPLE FOR INORGANIC ANALYSIS				
01-87	04/11/88	1	DRY				
01-87	04/11/88	2	DRY				
01-87	07/20/88	3	INSUFFICIENT SAMPLES FOR INORGANIC ANALYSIS				
01-87	10/26/88	4	INSUFFICIENT SAMPLES FOR INORGANIC ANALYSIS				
04-87	05/20/87	1	1318	200	5.80	310	309
04/87	05/26/87	2	INSUFFICIENT SAMPLES FOR INORGANIC ANALYSIS				
04-87	07/09/87	3	2374	458	6.0	700	390
04-87	10/14/87	4	1735	324	3.76	435	421
04-87	10/14/87	4	INSUFFICIENT SAMPLES FOR INORGANIC ANALYSIS				
04-87	02/15/88	1	1756	313	2.60	500	456
04-87	04/13/88	2	1836	269	3.86	518	432
04-87	07/14/88	3	1264	189	4.99	449	411
04-87	10/20/88	4	943	98.8	9.53	236	399
06-87	07/30/87	3	1195	263	0.34	283	367
06-87	08/25/87	3	INSUFFICIENT SAMPLE FOR INORGANIC ANALYSIS				

Notes: NR = Analyte not reported
J = Present below detection limit
U = Analyzed not detected
B = Present in laboratory blank

Groundwater Inorganic Results

For Wells at Rockwell (Rocky Flats)

ALLUVIAL WELLS AT THE 881 HILLSIDE

Wells Number	Date Sampled	Qtr.	Total Dissolved Solids MG/L	Chloride MG/L	Nitrate+ Nitrite-Nitrogen MG/L	Sulfate MG/L	HCO3- MG/L
06-87	10/14/87	4	INSUFFICIENT SAMPLES FOR INORGANIC ANALYSIS				
06-87	10/14/87	4	INSUFFICIENT SAMPLES FOR INORGANIC ANALYSIS				
06-87	02/17/87	1	1430	332	0.02 U	285	413
06-87	04/13/88	2	INSUFFICIENT SAMPLES FOR INORGANIC ANALYSIS				
06-87	07/14/88	3	INSUFFICIENT SAMPLES FOR INORGANIC ANALYSIS				
06-87	10/26/88	4	DRY				
43-87	12/18/87	4	1207	239	3.27	295	263.0
43-87	02/22/88	1	1770	259	3.00	243	139
43-87	04/11/88	2	1251	271	3.70	303	249
43-87	07/20/88	3	1232	246	4.29	332	356
43-87	10/17/88	4	INSUFFICIENT SAMPLES FOR INORGANIC ANALYSIS				
44-87	11/14/87	4	DRY				
44-87	02/22/88	1	DRY				
44-87	04/18/88	2	DRY				
44-87	07/20/88	3	DRY				
44-87	10/26/88	4	DRY				

Notes: NR = Analyte not reported
J = Present below detection limit
U = Analyzed not detected
B = Present in laboratory blank

Groundwater Inorganic Results

For Wells at Rockwell (Rocky Flats)

ALLUVIAL WELLS AT THE 881 HILLSIDE

Wells Number	Date Sampled	Qtr.	Total Dissolved Solids MG/L	Chloride MG/L	Nitrate+ Nitrite-Nitrogen MG/L	Sulfate MG/L	HCO3- MG/L
49-87	11/18/87	4	DRY				
49-87	02/17/88	1	DRY				
49-87	04/13/88	2	DRY				
49-87	04/13/88	2	DRY				
49-87	07/18/88	3	DRY				
49-87	10/21/88	4	DRY				
50-87	11/18/87	4	INSUFFICIENT SAMPLES FOR INORGANIC ANALYSIS				
50-87	11/18/88	4	INSUFFICIENT SAMPLES FOR INORGANIC ANALYSIS				
50-87	02/17/88	1	DRY				
50-87	04/13/88	2	DRY				
50-87	07/18/88	3	DRY				
50-87	10/21/88	4	DRY				
51-87	11/23/88	4	DRY				
51-87	02/12/88	1	DRY				
51-87	04/18/88	2	DRY				
51-87	07/18/88	3	DRY				

Notes: NR = Analyte not reported
J = Present below detection limit
U = Analyzed not detected
B = Present in laboratory blank

Groundwater Inorganic Results

For Wells at Rockwell (Rocky Flats)

ALLUVIAL WELLS AT THE 881 HILLSIDE

Wells Number	Date Sampled	Qtr.	Total Dissolved Solids MG/L	Chloride MG/L	Nitrate+ Nitrite-Nitrogen MG/L		Sulfate MG/L	HCO3- MG/L
51-87	10/21/88	4	DRY					
52-87	11/23/87	4	700	59.5	0.02	U	133	112
52-87	11/23/88	4	INSUFFICIENT SAMPLES FOR INORGANIC ANALYSIS					
52-87	02/12/88	1	814	67.3	0.02		186	502
52-87	04/18/88	2	936	76.9	0.02	U	241	359
52-87	07/18/88	3	878	85.6	0.06		225	460
52-87	10/18/88	4	799	2.90	0.02	U	197	443
53-87	11/18/87	4	INSUFFICIENT SAMPLES FOR INORGANIC ANALYSIS					
53-87	11/18/87	4	INSUFFICIENT SAMPLES FOR INORGANIC ANALYSIS					
53-87	11/18/88	1	DRY					
53-87	04/11/88	2	INSUFFICIENT SAMPLE FOR INORGANIC ANALYSIS					
53-87	07/18/88	3	DRY					
53-87	10/21/88	4	DRY					
54-87	11/18/88	4	INSUFFICIENT SAMPLES FOR INORGANIC ANALYSIS					

Notes: NR = Analyte not reported
J = Present below detection limit
U = Analyzed not detected
B = Present in laboratory blank

Groundwater Inorganic Results

For Wells at Rockwell (Rocky Flats)

ALLUVIAL WELLS AT THE 881 HILLSIDE

Wells Number	Date Sampled	Qtr.	Total Dissolved Solids MG/L	Chloride MG/L	Nitrate + Nitrite-Nitrogen MG/L	Sulfate MG/L	HCO3- MG/L
54-87	11/18/88	4	INSUFFICIENT SAMPLES FOR INORGANIC ANALYSIS				
54-87	11/18/88	4	INSUFFICIENT SAMPLES FOR INORGANIC ANALYSIS				
54-87	02/10/88	1	DRY				
54-87	04/11/88	2	INSUFFICIENT SAMPLE FOR INORGANIC ANALYSIS				
54-87	07/18/88	3	DRY				
54-87	10/21/88	4	DRY				

Notes: NR = Analyte not reported
J = Present below detection limit
U = Analyzed not detected
B = Present in laboratory blank

ALLUVIAL WELLS AT THE 881 HILLSIDE

TOTAL RADIOCHEMISTRY RESULTS

TOTAL RADIOCHEMISTRY RESULTS SUMMARY FOR GROUND WATER AT Rockwell (Rocky Flats)

Analyte	Maximum Value	Minimum Value	Number of Samples: Above Detection	Below Detection	Not Reported	Mean Value*
ALLUVIAL WELLS AT THE 881 HILLSIDE						
Gross Alpha (pci/l)	220 ± 10	21 ± 10	5	0	0	85
Gross Beta (pci/l)	134 ± 15	-3 ± 8	5	0	0	77
Uranium 233, 234 (pci/l)	22 ± 3	6.0 ± 1.3	5	0	0	10
Uranium 235 (pci/l)	.81 ± .71	0.0 ± 0.36	5	0	0	0.334
Uranium 238 (pci/l)	14 ± 3	2.9 ± 2.1	5	0	0	6.760
Strontium 89, 90 (pci/l)	4.50 ±	<0.6 ±	5	0	0	1.814
Plutonium 239, 240(pci/l)	0.28 ± 0.59	0.0 ± 1.1	5	0	0	0.098
Americium 241 (pci/l)	0.0 ± 2.6	0.0 ± 3.5	4	0	1	0.000
Cesium 137 (pci/l)	3.1 ±	3.1 ±	1	0	4	3.100
Tritium (pci/l)	<110 ±	<110 ±	5	0	0	0.000

* - For activities above detection only.

Groundwater Total Radiochemisty Results

for Wells at Rocky Flats Plant

ALLUVIAL WELLS AT THE 881 HILLSIDE

Well Number	Date Sampled	Qtr.	Gross Alpha pCi/l	Gross Beta pCi/l	Uranium 233,234 pCi/l	Uranium 235 pCi/l
09-74	03/09/87	1	100 ± 27	121 ± 21	6.0 ± 1.3	0.26 ± 0.44
09-74	04/09/87	1	28 ± 26	-3 ± 8	6.3 ± 2.3	.52 ± .73
09-74	05/21/87	2	21 ± 10	35 ± 14	8.4 ± 1.4	0.08 ± 0.33
09-74	07/02/87	3	See dissolved radiochemistry.			
09-74	08/11/87	3	DRY			
09-74	10/20/87	4	See dissolved radiochemistry.			
09-74	10/28/87	4	***			
09-74	11/17/87	4	***			
09-74	02/25/88	1	See dissolved radiochemistry.			
09-74	04/14/88	2	See dissolved radiochemistry.			
09-74	04/15/88	2	See dissolved radiochemistry.			
09-74	07/20/88	3	See dissolved radiochemistry.			
09-74	10/25/88	4	See dissolved radiochemistry.			
10-74	05/21/87	2	54 ± 20	97 ± 5	8.2 ± 1.9	0.0 ± 0.36
10-74	07/01/87	3	DRY			
10-74	10/20/87	4	***			
10-74	10/20/87	4	***			
10-74	02/25/88	1	See dissolved radiochemistry.			
10-74	07/19/88	3	See dissolved radiochemistry.			
10-74	10/25/88	4	See dissolved radiochemistry.			

Notes: NR = Analyte not reported
*** = Insufficient Sample for Radiochemistry Analyses

Groundwater Total Radiochemistry Results

for Wells at Rocky Flats Plant

ALLUVIAL WELLS AT THE 881 HILLSIDE

Well Number	Date Sampled	Qtr.	Uranium 238 pCi/l	Strontium 89, 90 pCi/l	Plutonium 239 pCi/l	Americium 241 pCi/l
09-74	03/09/87	1	5.0 ± 1.1	<0.6	0.28 ± 0.59	NR
09-74	04/09/87	1	2.9 ± 2.1	.65	0.0 ± 1.1	0.0 ± 3.5
09-74	05/21/87	2	7.7 ± 1.3	1.74	.19 ± .75	0.0 ± 1.2
09-74	07/02/87	3	See dissolved radiochemistry.			
09-74	08/11/87	3	DRY			
09-74	10/20/87	4	See dissolved radiochemistry.			
09-74	10/28/87	4	***			
09-74	11/17/87	4	***			
09-74	02/25/88	1	See dissolved radiochemistry.			
09-74	04/14/88	2	See dissolved radiochemistry.			
09-74	04/15/88	2	See dissolved radiochemistry.			
09-74	07/20/88	3	See dissolved radiochemistry.			
09-74	10/25/88	4	See dissolved radiochemistry.			
10-74	05/21/87	2	4.2 ± 1.3	2.18	0.020 ± 0.79	0.0 ± 1.2
10-74	07/01/87	3	DRY			
10-74	10/20/87	4	***			
10-74	10/20/87	4	***			
10-74	02/25/88	1	See dissolved radiochemistry.			
10-74	07/19/88	3	See dissolved radiochemistry.			
10-74	10/25/88	4	See dissolved radiochemistry.			

Notes: NR = Analyte not reported

*** = Insufficient Sample for Radiochemistry Analyses

Groundwater Total Radiochemistry Results

for Wells at Rocky Flats Plant

ALLUVIAL WELLS AT THE 881 HILLSIDE

Well Number	Date Sampled	Qtr.	Cesium 137 pCi/l	Tritium pCi/l
09-74	03/09/87	1	NR	<110
09-74	04/09/87	1	NR	<110
09-74	05/21/87	2	NR	<110
09-74	07/02/87	3	See dissolved radiochemistry.	
09-74	08/11/87	3	DRY	
09-74	10/20/87	4	See dissolved radiochemistry.	
09-74	10/28/87	4	***	
09-74	11/17/87	4	***	
09-74	02/25/88	1	See dissolved radiochemistry.	
09-74	04/14/88	2	See dissolved radiochemistry.	
09-74	04/15/88	2	See dissolved radiochemistry.	
09-74	07/20/88	3	See dissolved radiochemistry.	
09-74	10/25/88	4	See dissolved radiochemistry.	
10-74	05/21/87	2	NR	<110
10-74	07/01/87	3	DRY	
10-74	10/20/87	4	***	
10-74	10/20/87	4	***	
10-74	02/25/88	1	See dissolved radiochemistry.	
10-74	07/19/88	3	See dissolved radiochemistry.	
10-74	10/25/88	4	See dissolved radiochemistry.	

Notes: NR = Analyte not reported
*** = Insufficient Sample for Radiochemistry Analyses

Groundwater Total Radiochemistry Results

for Wells at Rocky Flats Plant

ALLUVIAL WELLS AT THE 881 HILLSIDE

Well Number	Date Sampled	Qtr.	Gross Alpha pCi/l	Gross Beta pCi/l	Uranium 233, 234 pCi/l	Uranium 235 pCi/l
01-87	10/12/87	4	DRY			
01-87	02/10/88	1	See dissolved radiochemistry.			
01-87	04/11/88	1	DRY			
01-87	04/11/88	2	DRY			
01-87	07/20/85	3	***			
01-87	10/26/87	4	***			
04-87	05/20/87	1	220 ± 10	134 ± 15	22 ± 3	.81 ± .71
04-87	05/26/87	2	***			
04-87	07/09/87	3	See dissolved radiochemisty.			
04-87	10/14/87	4	See dissolved radiochemisty.			
04-87	10/14/87	4	***			
04-87	02/15/88	1	See dissolved radiochemisty.			
04-87	04/13/88	2	See dissolved radiochemisty.			
04-87	07/14/88	3	See dissolved radiochemisty.			
04-87	10/20/88	4	See dissolved radiochemisty.			
06-87	07/30/87	3	See dissolved radiochemisty.			
06-87	08/25/87	3	***			
06-87	10/14/87	4	***			

Notes: NR = Analyte not reported
*** = Insufficient Sample for Radiochemistry Analyses

Groundwater Total Radiochemistry Results

for Wells at Rocky Flats Plant

ALLUVIAL WELLS AT THE 881 HILLSIDE

Well Number	Date Sampled	Qtr.	Uranium 238 pCi/l	Strontium 89,90 pCi/l	Plutonium 239 pCi/l	Americium 241 pCi/l
01-87	10/12/87	4	DRY			
01-87	02/10/88	1	See dissolved radiochemistry.			
01-87	04/11/88	1	DRY			
01-87	04/11/88	2	DRY			
01-87	07/20/88	3	***			
01-87	10/26/88	4	***			
04-87	05/20/87	1	14 ± 3	4.50	0.0 ± .55	0.0 ± 2.6
04-87	05/26/87	2	***			
04-87	07/09/87	3	See dissolved radiochemistry.			
04-87	10/14/87	4	See dissolved radiochemistry.			
04-87	10/14/87	4	***			
04-87	02/15/88	1	See dissolved radiochemistry.			
04-87	04/13/88	2	See dissolved radiochemistry.			
04-87	07/14/88	3	See dissolved radiochemistry.			
04-87	10/20/88	4	See dissolved radiochemistry.			
06-87	07/30/87	3	See dissolved radiochemistry.			
06-87	08/25/87	3	***			
06-87	10/14/87	4	***			

Notes: NR = Analyte not reported
*** = Insufficient Sample for Radiochemistry Analyses

Groundwater Total Radiochemistry Results

for Wells at Rocky Flats Plant

ALLUVIAL WELLS AT THE 881 HILLSIDE

Well Number	Date Sampled	Qtr.	Cesium 137 pCi/l	Tritium pCi/l
01-87	10/12/87	4	DRY	
01-87	02/10/88	1	See dissolved radiochemistry.	
01-87	04/11/88	1	DRY	
01-87	04/11/88	2	DRY	
01-87	07/20/88	3	***	
01-87	10/26/88	4	***	
04-87	05/20/87	1	3.1	<110
04-87	05/26/87	2	***	
04-87	07/09/87	3	See dissolved radiochemistry.	
04-87	10/14/87	4	See dissolved radiochemistry.	
04-87	10/14/87	4	***	
04-87	02/15/88	1	See dissolved radiochemistry.	
04-87	04/13/88	2	See dissolved radiochemistry.	
04-87	07/14/88	3	See dissolved radiochemistry.	
04-87	10/20/88	4	See dissolved radiochemistry.	
06-87	07/30/87	3	See dissolved radiochemistry.	
06-87	08/25/87	3	***	
06-87	10/14/87	4	***	

Notes: NR = Analyte not reported
*** = Insufficient Sample for Radiochemistry Analyses

Groundwater Total Radiochemistry Results

for Wells at Rocky Flats Plant

ALLUVIAL WELLS AT THE 881 HILLSIDE

Well Number	Date Sampled	Qtr.	Gross Alpha pCi/l	Gross Beta pCi/l	Uranium 233, 234 pCi/l	Uranium 235 pCi/l
06-87	10/14/87	4	***			
06-87	02/17/88	1	See dissolved radiochemistry.			
06-87	04/13/88	2	***			
06-87	07/14/88	3	***			
06-87	10/26/88	4	DRY			
43-87	12/18/87	4	See dissolved radiochemistry.			
43-87	02/22/88	1	See dissolved radiochemistry.			
43-87	04/11/88	2	See dissolved radiochemistry.			
43-87	07/20/88	3	See dissolved radiochemistry.			
43-87	10/17/88	4	***			
44-87	11/14/87	4	DRY			
44-87	02/22/88	1	DRY			
44-87	04/18/88	2	DRY			
44-87	07/20/88	3	DRY			
44-87	10/26/88	4	DRY			
49-87	11/18/87	4	DRY			

Notes: NR = Analyte not reported
*** = Insufficient Sample for Radiochemistry Analyses

Groundwater Total Radiochemistry Results

for Wells at Rocky Flats Plant

ALLUVIAL WELLS AT THE 881 HILLSIDE

Well Number	Date Sampled	Qtr.	Uranium 238 pCi/l	Strontium 89, 90 pCi/l	Plutonium 239 pCi/l	Americium 241 pCi/l
06-87	10/14/87	4	***			
06-87	02/17/88	1	See dissolved radiochemistry.			
06-87	04/13/88	2	***			
06-87	07/14/88	3	***			
06-87	10/26/88	4	DRY			
43-87	12/18/87	4	See dissolved radiochemistry.			
43-87	02/22/88	1	See dissolved radiochemistry.			
43-87	04/11/88	2	See dissolved radiochemistry.			
43-87	07/20/88	3	See dissolved radiochemistry.			
43-87	10/17/88	4	***			
44-87	11/14/87	4	DRY			
44-87	02/22/88	1	DRY			
44-87	04/18/88	2	DRY			
44-87	07/20/88	3	DRY			
44-87	10/26/88	4	DRY			
49-87	11/18/87	4	DRY			

Notes: NR = Analyte not reported
*** = Insufficient Sample for Radiochemistry Analyses

Groundwater Total Radiochemistry Results

for Wells at Rocky Flats Plant

ALLUVIAL WELLS AT THE 881 HILLSIDE

Well Number	Date Sampled	Qtr.	Cesium 137 pCi/l	Tritium pCi/l
06-87	10/14/87	4	***	
06-87	02/17/88	1	See dissolved radiochemistry.	
06-87	04/13/88	2	***	
06-87	07/14/88	3	***	
06-87	10/26/88	4	DRY	
43-87	12/18/87	4	See dissolved radiochemistry.	
43-87	02/22/88	1	See dissolved radiochemistry.	
43-87	04/11/88	2	See dissolved radiochemistry.	
43-87	07/20/88	3	See dissolved radiochemistry.	
43-87	10/17/88	4	***	
44-87	11/14/87	4	DRY	
44-87	02/22/88	1	DRY	
44-87	04/18/88	2	DRY	
44-87	07/20/88	3	DRY	
44-87	10/26/88	4	DRY	
49-87	11/18/87	4	DRY	

Notes: NR = Analyte not reported
*** = Insufficient Sample for Radiochemistry Analyses

Groundwater Total Radiochemistry Results

for Wells at Rocky Flats Plant

ALLUVIAL WELLS AT THE 881 HILLSIDE

Well Number	Date Sampled	Qtr.	Gross Alpha pCi/l	Gross Beta pCi/l	Uranium 233, 234 pCi/l	Uranium 235 pCi/l
49-87	02/17/88	1	DRY			
49-87	04/13/88	2	DRY			
49-87	04/13/88	2	DRY			
49-87	07/18/88	3	DRY			
49-87	10/21/88	4	DRY			
50-87	11/18/87	4	***			
50-87	11/18/87	4	***			
50-87	02/17/88	1	DRY			
50-87	04/13/88	2	DRY			
50-87	07/18/88	3	DRY			
50-87	10/21/88	4	DRY			
51-87	11/23/87	4	DRY			
51-87	02/12/88	1	DRY			
51-87	04/18/88	2	DRY			
51-87	07/18/88	3	DRY			
51-87	10/21/88	4	DRY			
52-87	11/23/87	4	See dissolved radiochemistry.			

Notes: NR = Analyte not reported
*** = Insufficient Sample for Radiochemistry Analyses

Groundwater Total Radiochemistry Results

for Wells at Rocky Flats Plant

ALLUVIAL WELLS AT THE 881 HILLSIDE

Well Number	Date Sampled	Qtr.	Uranium 238 pci/l	Strontium 89, 90 pCi/l	Plutonium 239 pCi/l	Americium 241 pCi/l
49-87	02/17/88	1	DRY			
49-87	04/13/88	2	DRY			
49-87	04/13/88	2	DRY			
49-87	07/18/88	3	DRY			
49-87	10/21/88	4	DRY			
50-87	11/18/87	4	***			
50-87	11/18/87	4	***			
50-87	02/17/88	1	DRY			
50-87	04/13/88	2	DRY			
50-87	07/18/88	3	DRY			
50-87	10/21/88	4	DRY			
51-87	11/23/87	4	DRY			
51-87	02/12/88	1	DRY			
51-87	04/18/88	2	DRY			
51-87	07/18/88	3	DRY			
51-87	10/21/88	4	DRY			
52-87	11/23/87	4	See dissolved radiochemistry.			

Notes: NR = Analyte not reported
*** = Insufficient Sample for Radiochemistry Analyses

Groundwater Total Radiochemistry Results

for Wells at Rocky Flats Plant

ALLUVIAL WELLS AT THE 881 HILLSIDE

Well Number	Date Sampled	Qtr.	Cesium 137 pCi/l	Tritium pCi/l
49-87	02/17/88	1	DRY	
49-87	04/13/88	2	DRY	
49-87	04/13/88	2	DRY	
49-87	07/18/88	3	DRY	
49-87	10/21/88	4	DRY	
50-87	11/18/87	4	***	
50-87	11/18/87	4	***	
50-87	02/17/88	1	DRY	
50-87	04/13/88	2	DRY	
50-87	07/18/88	3	DRY	
50-87	10/21/88	4	DRY	
51-87	11/23/87	4	DRY	
51-87	02/12/88	1	DRY	
51-87	04/18/88	2	DRY	
51-87	07/18/88	3	DRY	
51-87	10/21/88	4	DRY	
52-87	11/23/87	4	See dissolved radiochemistry.	

Notes: NR = Analyte not reported
*** = Insufficient Sample for Radiochemistry Analyses

Groundwater Total Radiochemistry Results

for Wells at Rocky Flats Plant

ALLUVIAL WELLS AT THE 881 HILLSIDE

Well Number	Date Sampled	Qtr.	Gross Alpha pCi/l	Gross Beta pCi/l	Uranium 233, 234 pCi/l	Uranium 235 pCi/l
52-87	11/23/87	4	***			
52-87	02/12/88	1	See dissolved radiochemistry.			
52-87	04/18/88	2	See dissolved radiochemistry.			
52-87	07/18/88	3	See dissolved radiochemistry.			
52-87	10/18/88	4	See dissolved radiochemistry.			
53-87	11/18/87	4	***			
53-87	11/18/87	4	***			
53-87	02/10/88	1	DRY			
53-87	04/11/88	2	***			
53-87	07/18/88	3	DRY			
53-87	10/21/88	4	DRY			
54-87	11/18/87	4	***			
54-87	11/18/87	4	***			
54-87	11/18/87	4	***			
54-87	02/10/88	1	DRY			
54-87	04/11/88	2	***			
54-87	07/18/88	3	DRY			

Notes: NR = Analyte not reported
*** = Insufficient Sample for Radiochemistry Analyses

Groundwater Total Radiochemistry Results

for Wells at Rocky Flats Plant

ALLUVIAL WELLS AT THE 881 HILLSIDE

Well Number	Date Sampled	Qtr.	Uranium 238 pci/l	Strontium 89, 90 pCi/l	Plutonium 239 pCi/l	Americium 241 pCi/l
52-87	11/23/87	4	***			
52-87	02/12/88	1	See dissolved radiochemistry.			
52-87	04/18/88	2	See dissolved radiochemistry.			
52-87	07/18/88	3	See dissolved radiochemistry.			
52-87	10/18/88	4	See dissolved radiochemistry.			
53-87	11/18/87	4	***			
53-87	11/18/87	4	***			
53-87	02/10/88	1	DRY			
53-87	04/11/88	2	***			
53-87	07/18/88	3	DRY			
53-87	10/21/88	4	DRY			
54-87	11/18/87	4	***			
54-87	11/18/87	4	***			
54-87	11/18/87	4	***			
54-87	02/10/88	1	DRY			
54-87	04/11/88	2	***			
54-87	07/18/88	3	DRY			

Notes: NR = Analyte not reported
*** = Insufficient Sample for Radiochemistry Analyses

Groundwater Total Radiochemistry Results

for Wells at Rocky Flats Plant

ALLUVIAL WELLS AT THE 881 HILLSIDE

Well Number	Date Sampled	Qtr.	Cesium 137 pCi/l	Tritium pCi/l
52-87	11/23/87	4	***	
52-87	02/12/88	1	See dissolved radiochemistry.	
52-87	04/18/88	2	See dissolved radiochemistry.	
52-87	07/18/88	3	See dissolved radiochemistry.	
52-87	10/18/88	4	See dissolved radiochemistry.	
53-87	11/18/87	4	***	
53-87	11/18/87	4	***	
53-87	02/10/88	1	DRY	
53-87	04/11/88	2	***	
53-87	07/18/88	3	DRY	
53-87	10/21/88	4	DRY	
54-87	11/18/87	4	***	
54-87	11/18/87	4	***	
54-87	11/18/87	4	***	
54-87	02/10/88	1	DRY	
54-87	04/11/88	2	***	
54-87	07/18/88	3	DRY	

Notes: NR = Anatyte not reported
*** = Insufficient Sample for Radiochemistry Analyses

Groundwater Total Radiochemistry Results

for Wells at Rocky Flats Plant

ALLUVIAL WELLS AT THE 881 HILLSIDE

Well Number	Date Sampled	Qtr.	Gross Alpha pCi/l	Gross Beta pCi/l	Uranium 233, 234 pCi/l	Uranium 235 pCi/l
54-87	10/21/88	4	DRY			

Notes: NR = Analyte not reported
*** = Insufficient Sample for Radiochemistry Analyses

Groundwater Total Radiochemistry Results

for Wells at Rocky Flats Plant

ALLUVIAL WELLS AT THE 881 HILLSIDE

Well Number	Date Sampled	Qtr.	Uranium 238 pCi/l	Strontium 89, 90 pCi/l	Plutonium 239 pCi/l	Americium 241 pCi/l
54-87	10/21/88	4	DRY			

Notes: NR = Analyte not reported
*** = Insufficient Sample for Radiochemistry Analyses

Groundwater Total Radiochemistry Results

for Wells at Rocky Flats Plant

ALLUVIAL WELLS AT THE 881 HILLSIDE

Well Number	Date Sampled	Qtr.	Cesium 137 pCi/l	Tritium pCi/l
54-87	10/21/88	4	DRY	

Notes: NR = Analyte not reported
*** = Insufficient Sample for Radiochemistry Analyses

ALLUVIAL WELLS AT THE 881 HILLSIDE
DISSOLVED RADIO CHEMISTRY RESULTS

DISSOLVED RADIOCHEMISTRY RESULTS SUMMARY
FOR GROUND WATER AT Rockwell (Rocky Flats)

Analyte	Maximum Value	Minimum Value	Number of Samples: Above Detection	Number of Samples: Below Detection	Number of Samples: Not Reported	Mean Value*
ALLUVIAL WELLS AT THE 881 HILLSIDE						
Gross Alpha (pci/l)	319 ± 24.1	3 ± 4	24	0	0	49
Gross Beta (pci/l)	286 ± 83	8 ± 27	24	0	0	36
Uranium 233, 234 (pci/l)	29.3 ± 3.9	4.7 ± 0.7	24	0	0	17
Uranium 235, (pci/l)	4.3 ± 0.9	0.0 ± 0.6	24	0	0	0.695
Uranium 238 (pci/l)	25.3 ± 3.4	4.0 ± 0.6	24	0	0	13
Strontium 89, 90 (pci/l)	2.1 ±	<1.0 ±	6	0	18	0.850
Plutonium 239, 240 (pci/l)	.14± .73	-.23 ± .59	24	0	0	0.000
Americium 241 (pci/l)	.70 ± .86	-0.4 ± 1.6	18	0	6	0.022
Cesium 137 ( )			0	0	24	
Tritium (pci/l)	777 ± 333	<515 ±	23	0	1	80

* - For activities above detection only.

Groundwater Dissolved Radiochemistry Results

for Regulated Units at Rocky Flats Plant

ALLUVIAL WELLS AT THE 881 HILLSIDE

Well Number	Date Sampled	Qtr.	Gross Alpha (PCI/L)	(MDA)	Gross Beta PCI/L	(MDA)	Uranium 233, 234 PCI/L	(MDA)	Uranium 235 PCI/L	(MDA)
09-74	03/09/87	1	See total radiochemistry.							
09-74	04/09/87	1	See total radiochemistry.							
09-74	05/21/87	2	See total radiochemistry.							
09-74	07/02/87	3	6 ± 29	52	6 ± 42	79	12.0 ± 2.1		0.0 ± 0.6	0.9
09-74	08/11/87	3	DRY							
09-74	10/20/87	4	14 ± 7		21 ± 10		9.2 ± 0.9		.48 ± .13	
09-74	10/28/87	4	***							
09-74	11/17/87	4	***							
09-74	02/25/88	1	20 ± 11		14 ± 27		15 ± 2		0.53 ± 0.16	
09-74	04/14/88	2	22 ± 11		14 ± 18	41	12 ± 1		0.42 ± 0.07	
09-74	04/15/88	2	21 ± 12		19 ± 16	35	12 ± 1		0.36 ± 0.06	
09-74	07/20/88	3	15 ± 4		11 ± 3		12 ± 1		.28 ± 0.07	
09-74	10/25/88	4	Data not yet received							
10-74	05/21/87	2	See total radiochemistry.							
10-74	07/01/87	3	DRY							
10-74	10/20/87	4	***							
10-74	10/20/87	4	***							
10-74	02/25/88	1	13 ± 11		8 ± 27		7.3 ± 0.7		0.37 ± 0.12	
10-74	07/19/88	3	3 ± 4		1 ± 3		6.2 ± 0.6		0.21 ± 0.06	
10-74	10/25/88	4	Data not yet received							

Notes: NR = Analyte not reported
*** = Insufficient Sample for Radiochemistry Analyses

Groundwater Dissolved Radiochemistry Results

for Regulated Units at Rocky Flats Plant

ALLUVIAL WELLS AT THE 881 HILLSIDE

Well Number	Date Sampled	Qtr.	Uranium 238 (PCI/L)	(MDA)	Strontium 89, 90 PCI/L	(MDA)	Plutonium 239, 240 PCI/L	(MDA)	Americium 241 PCI/L	(MDA)
09-74	03/09/87	1	See total radiochemistry.							
09-74	04/09/87	1	See total radiochemistry.							
09-74	05/21/87	2	See total radiochemistry.							
09-74	07/02/87	3	8.1 ± 1.5		<1.0		0.0 ± 1.1	1.6	NR	
09-74	08/11/87	3	DRY							
09-74	10/20/87	4	7.0 ± .07		1.0		0.00 ± .11	.61	0.00 ± 03	.34
09-74	10/28/87	4	* * *							
09-74	11/17/87	4	* * *							
09-74	02/25/88	1	11 ± 1		NR		0.00 ± 0.41		NR	
09-74	04/14/88	2	9.2 ± 1.2		NR		0.00 ± 0.04	0.25	0.02 ± 0.16	0.50
09-74	04/15/88	2	9.5 ± 1.0		NR		0.00 ± 0.04	0.22	0.00 ± 0.16	0.95
09-74	07/20/88	3	8.6 ± 0.9				0.00 ± 0.04		0.00 ± 0.10	
09-74	10/25/88	4	Data not yet received							
10-74	05/21/87	2	See total radiochemistry.							
10-74	07/01/87	3	DRY							
10-74	10/20/87	4	* * *							
10-74	10/20/87	4	* * *							
10-74	02/25/88	1	5.1 ± 0.5		NR		0.00 ± 0.25		NR	
10-74	07/19/88	3	4.5 ± 0.5		NR		0.00 ± 0.07		0.00 ± 0.08	
10-74	10/25/88	4	Data not yet received							

Notes: NR = Analyte not reported
*** = Insufficient Sample for Radiochemistry Analyses

Groundwater Dissolved Radiochemistry Results

for Regulated Units at Rocky Flats Plant

ALLUVIAL WELLS AT THE 881 HILLSIDE

Well Number	Date Sampled	Qtr.	Cesium 137 (PCI/L)	(MDA)	Tritium PCI/L	(MDA)
09-74	03/09/87	1	See total radiochemistry.			
09-74	04/09/87	1	See total radiochemistry.			
09-74	05/21/87	2	See total radiochemistry.			
09-74	07/02/87	3	NR		<515	
09-74	08/11/87	3	DRY			
09-74	10/20/87	4	NR		<520	
09-74	10/28/87	4	***			
09-74	11/17/87	4	***			
09-74	02/25/88	1	NR		<210	220
09-74	04/14/88	2	NR		<220	220
09-74	04/15/88	2	NR		<220	
09-74	07/20/88	3	NR		230	
09-74	10/25/88	4	Data not yet received			
10-74	05/21/87	2	See total radiochemistry.			
10-74	07/01/87	3	DRY			
10-74	10/20/87	4	***			
10-74	10/20/87	4	***			
10-74	02/25/88	1	NR		<220	
10-74	07/19/88	3	NR		210	
10-74	10/25/88	4	Data not yet received			

Notes: NR = Analyte not reported
*** = Insufficient Sample for Radiochemistry Analyses

Groundwater Dissolved Radiochemistry Results

for Regulated Units at Rocky Flats Plant

ALLUVIAL WELLS AT THE 881 HILLSIDE

Well Number	Date Sampled	Qtr.	Gross Alpha (PCI/L)	(MDA)	Gross Beta PCI/L	(MDA)	Uranium 233, 234 PCI/L	(MDA)	Uranium 235 PCI/L	(MDA)
01-87	10/12/87	4	DRY							
01-87	02/10/88	1	15 ± 11		15 ± 30		8.4 ± 0.7		0.34 ± 0.11	
01-87	04/11/88	1	DRY							
01-87	04/11/88	2	DRY							
01-87	07/20/88	3	***							
01-87	10/26/88	4	***							
04-87	05/20/87	1	See total radiochemistry.							
04-87	05/26/87	2	***							
04-87	07/09/87	3	319 ± 241		286 ± 83		26.8 ± 3.2		0.5 ± 0.4	1.1
04-87	10/14/88	4	133 ± 69		75 ± 54		16 ± 3		.56 ± .30	
04-87	10/14/88	4	***							
04-87	02/15/88	1	50 ± 13		16 ± 13		19 ± 2		1.1 ± 0.2	
04-87	04/13/88	2	59 ± 16		28 ± 18	40	23 ± 2		0.55 ± 0.09	
04-87	07/14/88	3	37 ± 6		30 ± 4		19 ± 2		0.55 ± 0.10	
04-87	10/20/55	4	Data not yet received							
06-87	07/30/87	3	59 ± 33		42 ± 44	76	29.3 ± 3.9		1.3 ± 0.6	
06-87	08/25/87	3	***							
06-87	10/14/87	4	***							

Notes: NR = Analyte not reported
*** = Insufficient Sample for Radiochemistry Analyses

Groundwater Dissolved Radiochemistry Results

for Regulated Units at Rocky Flats Plant

ALLUVIAL WELLS AT THE 881 HILLSIDE

Well Number	Date Sampled	Qtr.	Uranium 238 (PCI/L)	(MDA)	Strontium 89, 90 PCI/L	(MDA)	Plutonium 239, 240 PCI/L	(MDA)	Americium 241 PCI/L	(MDA)
01-87	10/12/87	4	DRY							
01-87	02/10/88	1	5.5 ± 0.5		NR		0.0 ± 0.26		0.03 ± 0.25	
01-87	04/11/88	1	DRY							
01-87	04/11/88	2	DRY							
01-87	07/20/88	3	***							
01-87	10/26/88	4	***							
04-87	05/20/87	1	See total radiochemistry.							
04-87	05/26/87	2	***							
04-87	07/09/87	3	17.4 ± 2.3		2.1		.14 ± 73	0.7	.70 ± .86	1.0
04-87	10/14/87	4	12 ± 2		NR		.06 ± .14		.02 ± .07	
04-87	10/14/87	4	***							
04-87	02/15/88	1	15 ± 2		NR		0.00 ± 0.24		0.00 ± 0.14	
04-87	04/13/88	2	17 ± 1		NR		0.00 ± 0.05	0.17	0.00 ± 0.16	0.60
04-87	07/14/88	3	14 ± 1		NR		0.00 ± 0.04		0.00 ± 0.17	
04-87	10/20/88	4	Data not yet recieved							
06-87	07/30/87	3	25.3 ± 3.4		2.0		.23 ± .59	0.6	-0.4 ± 1.6	3.3
06-87	08/25/87	3	***							
06-87	10/14/87	4	***							

Notes: NR = Analyte not reported
*** = Insufficient Sample for Radiochemistry Analyses

Groundwater Dissolved Radiochemistry Results

for Regulated Units at Rocky Flats Plant

ALLUVIAL WELLS AT THE 881 HILLSIDE

Well Number	Date Sampled	Qtr.	Cesium 137 (PCI/L)	(MDA)	Tritium PCI/L	(MDA)
01-87	10/12/87	4	DRY			
01-87	02/10/88	1	NR		NR	
01-87	04/11/88	1	DRY			
01-87	04/11/88	2	DRY			
01-87	07/20/88	3	***			
01-87	10/26/88	4	***			
04-87	05/20/87	1	See total radiochemistry.			
04-87	05/26/87	2	***			
04-87	07/09/87	3	NR		777 ± 333	
04-87	10/14/87	4	NR		<460	
04-87	10/14/87	4	***			
04-87	02/15/88	1	NR		<210	
04-87	04/13/88	2	NR		<220	220
04-87	07/14/88	3	NR		210	
04-87	10/20/88	4	Data not yet received			
06-87	07/30/87	3	NR		<540	
06-87	08/25/87	3	***			
06-87	10/14/87	4	***			

Notes: NR = Analyte not reported
*** = Insufficient Sample for Radiochemistry Analyses

Groundwater Dissolved Radiochemistry Results

for Regulated Units at Rocky Flats Plant

ALLUVIAL WELLS AT THE 881 HILLSIDE

Well Number	Date Sampled	Qtr.	Gross Alpha (PCI/L)	(MDA)	Gross Beta PCI/L	(MDA)	Uranium 233, 234 PCI/L	(MDA)	Uranium 235 PCI/L	(MDA)
06-87	10/14/87	4	***							
06-87	02/17/88	1	48 ± 10		25 ± 13		28 ± 3		0.93 ± 0.23	
06-87	04/13/88	2	***							
06-87	07/14/88	3	***							
06-87	10/26/88	4	DRY							
43-87	12/18/87	4	74 ± 14		82 ± 12		20 ± 4		.51 ± .27	
43-87	02/22/88	1	29 ± 14		14 ± 24		20 ± 3		4.3 ± 09	
43-87	04/11/88	2	29 ± 12		11 ± 18	40	15 ± 1		0.51 ± 0.08	
43-87	07/20/88	3	21 ± 4		21 ± 4		18 ± 2		0.57 ± 0.11	
43-87	10/17/88	4	***							
44-87	11/14/87	4	DRY							
44-87	02/22/88	1	DRY							
44-87	04/18/88	2	DRY							
44-87	07/20/88	3	DRY							
49-87	10/26/88	4	DRY							
49-87	11/18/87	4	DRY							

Notes: NR = Analyte not reported
*** = Insufficient Sample for Radiochemistry Analyses

Groundwater Dissolved Radiochemistry Results

for Regulated Units at Rocky Flats Plant

ALLUVIAL WELLS AT THE 881 HILLSIDE

Well Number	Date Sampled	Qtr.	Uranium 238 (PCI/L)	(MDA)	Strontium 89, 90 PCI/L	(MDA)	Plutonium 239, 240 PCI/L	(MDA)	Americium 241 PCI/L	(MDA)
06-87	10/14/87	4	***							
06-87	02/17/88	1	24 ± 3		NR		0.0 ± 0.20		0.00 ± 0.11	
06-87	04/13/88	2	***							
06-87	07/14/88	3	***							
06-87	10/26/88	4	DRY							
43-87	12/18/87	4	17 ± 4		<1.0		0.00 ± .16	.68	NR	
43-87	02/22/88	1	20 ± 3		NR		0.00 ± 0.23		NR	
43-87	04/11/88	2	12 ± 1		NR		0.01 ± 0.06	0.17	NR	
43-87	07/20/88	3	16 ± 2		NR		0.00 ± 0.04		0.00 ± 0.09	
43-87	10/17/88	4	***							
44-87	11/14/87	4	DRY							
44-87	02/22/88	1	DRY							
44-87	04/18/88	2	DRY							
44-87	07/20/88	3	DRY							
49-87	10/26/88	4	DRY							
49-87	11/18/87	4	DRY							

Notes: NR = Analyte not reported
*** = Insufficient Sample for Radiochemistry Analyses

Groundwater Dissolved Radiochemistry Results

for Regulated Units at Rocky Flats Plant

ALLUVIAL WELLS AT THE 881 HILLSIDE

Well Number	Date Sampled	Qtr.	Cesium 137 PCI/L	(MDA)	Tritium PCI/L	(MDA)
06-87	10/14/87	4	***			
06-87	02/17/88	1	NR		<210	
06-87	04/13/88	2	***			
06-87	07/14/88	3	***			
06-87	10/26/88	4	DRY			
43-87	12/18/87	4	NR		<220	
43-87	02/22/88	1	NR		<210	
43-87	04/11/88	2	NR		<220	220
43-87	07/20/88	3	NR		220	
43-87	10/17/88	4	***			
44-87	11/14/87	4	DRY			
44-87	02/22/88	1	DRY			
44-87	04/18/88	2	DRY			
44-87	07/20/88	3	DRY			
49-87	10/26/88	4	DRY			
49-87	11/18/87	4	DRY			

Notes: NR = Analyte not reported
*** = Insufficient Sample for Radiochemistry Analyses

Groundwater Dissolved Radiochemistry Results

for Regulated Units at Rocky Flats Plant

ALLUVIAL WELLS AT THE 881 HILLSIDE

Well Number	Date Sampled	Qtr.	Gross Alpha (PCI/L)	(MDA)	Gross Beta PCI/L	(MDA)	Uranium 233, 234 PCI/L	(MDA)	Uranium 235 PCI/L	(MDA)
49-87	02/17/88	1	DRY							
49-87	04/13/88	2	DRY							
49-87	04/13/88	2	DRY							
49-87	07/18/88	3	DRY							
49-87	10/21/88	4	DRY							
50-87	11/18/87	4	***							
50-87	11/18/87	4	***							
50-87	02/17/88	1	DRY							
50-87	04/13/88	2	DRY							
50-87	07/18/88	3	DRY							
50-87	10/21/88	4	DRY							
51-87	11/23/87	4	DRY							
51-87	02/12/88	1	DRY							
51-87	04/18/88	2	DRY							
51-87	07/18/88	3	DRY							
51-87	10/21/88	4	DRY							
52-87	11/23/87	4	70	± 13	76	± 11	21	± 2	.79	± .15

Notes: NR = Analyte not reported
*** = Insufficient Sample for Radiochemistry Analyses

Groundwater Dissolved Radiochemistry Results

for Regulated Units at Rocky Flats Plant

ALLUVIAL WELLS AT THE 881 HILLSIDE

Well Number	Date Sampled	Qtr.	Uranium 238 (PCI/L)	(MDA)	Strontium 89, 90 PCI/L	(MDA)	Plutonium 239, 240 PCI/L	(MDA)	Americium 241 PCI/L	(MDA)
49-87	02/17/88	1	DRY							
49-87	04/13/88	2	DRY							
49-87	04/13/88	2	DRY							
49-87	07/18/88	3	DRY							
49-87	10/21/88	4	DRY							
50-87	11/18/87	4	***							
50-87	11/18/87	4	***							
50-87	02/17/88	1	DRY							
50-87	04/13/88	2	DRY							
50-87	07/18/88	3	DRY							
50-87	10/21/88	4	DRY							
51-87	11/23/87	4	DRY							
51-87	02/12/88	1	DRY							
51-87	04/18/88	2	DRY							
51-87	07/18/88	3	DRY							
51-87	10/21/88	4	DRY							
52-87	11/23/87	4	15 ± 2		<1.0		0.00 ± .28	1.1	0.00 ± .33	2.1

Notes: NR = Analyte not reported
*** = Insufficient Sample for Radiochemistry Analyses

Groundwater Dissolved Radiochemistry Results

for Regulated Units at Rocky Flats Plant

ALLUVIAL WELLS AT THE 881 HILLSIDE

Well Number	Date Sampled	Qtr.	Cesium 137 PCI/L	(MDA)	Tritium PCI/L	(MDA)
49-87	02/17/88	1	DRY			
49-87	04/13/88	2	DRY			
49-87	04/13/88	2	DRY			
49-87	07/18/88	3	DRY			
49-87	10/21/88	4	DRY			
50-87	11/18/87	4	***			
50-87	11/18/87	4	***			
50-87	02/17/88	1	DRY			
50-87	04/13/88	2	DRY			
50-87	07/18/88	3	DRY			
50-87	10/21/88	4	DRY			
51-87	11/23/87	4	DRY			
51-87	02/12/88	1	DRY			
51-87	04/18/88	2	DRY			
51-87	07/18/88	3	DRY			
51-87	10/21/88	4	DRY			
52-87	11/23/87	4	NR		<540	

Notes: NR = Analyte not reported
*** = Insufficient Sample for Radiochemistry Analyses

Groundwater Dissolved Radiochemistry Results

for Regulated Units at Rocky Flats Plant

ALLUVIAL WELLS AT THE 881 HILLSIDE

Well Number	Date Sampled	Qtr.	Gross Alpha (PCI/L)	(MDA)	Gross Beta PCI/L	(MDA)	Uranium 233, 234 PCI/L	(MDA)	Uranium 235 PCI/L	(MDA)
52-87	11/23/87	4	***							
52-87	02/12/88	1	40 ± 16		17 ± 23		4.7 ± 0.7		0.19 ± 0.12	
52-87	04/18/88	2	46 ± 13		32 ± 18	40	29 ± 3		0.80 ± 0.14	
52-87	07/18/88	3	39 ± 5		23 ± 4		28 ± 3		0.53 ± 0.22	
52-87	10/18/88	4	Data not yet received							
53/87	11/18/87	4	***							
53/87	11/18/87	4	***							
53/87	02/10/88	1	DRY							
53/87	04/11/88	2	***							
53/87	07/18/88	3	DRY							
53/87	10/21/88	4	DRY							
54/87	11/18/87	4	***							
54/87	11/18/87	4	***							
54/87	11/18/87	4	***							
54/87	02/10/88	1	DRY							
54/87	04/11/88	2	***							
54/87	07/18/88	3	DRY							

Notes: NR = Analyte not reported
*** = Insufficient Sample for Radiochemistry Analyses

Groundwater Dissolved Radiochemistry Results

for Regulated Units at Rocky Flats Plant

ALLUVIAL WELLS AT THE 881 HILLSIDE

Well Number	Date Sampled	Qtr.	Uranium 238 PCI/L	(MDA)	Strontium 89, 90 PCI/L	(MDA)	Plutonium 239, 240 PCI/L	(MDA)	Americium PCI/L	(MDA)
52-87	11/23/87	4	***							
52-87	02/12/88	1	40 ± 0.6		NR		0.00 ± 0.13		0.00 ± 0.11	
52-87	04/18/88	2	21 ± 2		NR		0.00 ± 0.03	0.15	0.02 ± 0.16	0.79
52-87	07/18/88	3	19 ± 2		NR		0.01 ± 0.08		0.01 ± 0.17	
52-87	10/18/88	4	Data not yet received							
53/87	11/18/87	4	***							
53/87	11/18/87	4	***							
53/87	02/10/88	1	DRY							
53/87	04/11/88	2	***							
53/87	07/18/88	3	DRY							
53/87	10/21/88	4	DRY							
54/87	11/18/87	4	***							
54/87	11/18/87	4	***							
54/87	11/18/87	4	***							
54/87	02/10/87	1	DRY							
54/87	04/11/88	2	***							
54/87	07/18/88	3	DRY							

Notes: NR = Analyte not reported
*** = Insufficient Sample for Radiochemistry Analyses

Groundwater Dissolved Radiochemistry Results

for Regulated Units at Rocky Flats Plant

ALLUVIAL WELLS AT THE 881 HILLSIDE

Well Number	Date Sampled	Qtr.	Cesium 137 PCI/L	(MDA)	Tritium PCI/L	(MDA)
52-87	11/23/87	4	***			
52-87	02/12/88	1	NR		<210	
52-87	04/18/88	2	NR		<210	
52-87	07/18/88	3	NR		200	
52-87	10/18/88	4	Data not yet received			
53/87	11/18/87	4	***			
53/87	11/18/87	4	***			
53/87	02/10/88	1	DRY			
53/87	04/11/88	2	***			
53/87	07/18/88	3	DRY			
53/87	10/21/88	4	DRY			
54/87	11/18/87	4	***			
54/87	11/18/87	4	***			
54/87	11/18/87	4	***			
54/87	02/10/88	1	DRY			
54/87	04/11/88	2	***			
54/87	07/18/88	3	DRY			

Notes: NR = Analyte not reported
*** = Insufficient Sample for Radiochemistry Analyses

Groundwater Dissolved Radiochemistry Results

for Regulated Units at Rocky Flats Plant

ALLUVIAL WELLS AT THE 881 HILLSIDE

Well Number	Date Sampled	Qtr.	Gross Alpha PCI/L	(MDA)	Gross Beta PCI/L	(MDA)	Uranium 233, 234 PCI/L	(MDA)	Uranium 235 PCI/L	(MDA)
54-87	10/21/88	4	DRY							

Notes: NR = Analyte not reported
*** = Insufficient Sample for Radiochemistry Analyses

Groundwater Dissolved Radiochemistry Results

for Regulated Units at Rocky Flats Plant

ALLUVIAL WELLS AT THE 881 HILLSIDE

Well Number	Date Sampled	Qtr.	Uranium 238 (PCI/L)	(MDA)	Strontium 89, 90 PCI/L	(MDA)	Plutonium 239, 240 PCI/L	(MDA)	Americium 241 PCI/L	(MDA)
54-87	10/21/88	4	DRY							

Notes: NR = Analyte not reported
*** = Insufficient Sample for Radiochemistry Analyses

Groundwater Dissolved Radiochemistry Results

for Regulated Units at Rocky Flats Plant

ALLUVIAL WELLS AT THE 881 HILLSIDE

Well Number	Date Sampled	Qtr.	Cesium 137 PCI/L	(MDA)	Tritium PCI/L	(MDA)
54-87	10/21/88	4	DRY			

Notes: NR = Analyte not reported
*** = Insufficient Sample for Radiochemistry Analyses

SECTION 2

VOLATILE ORGANIC COMPOUND, DISSOLVED METALS, INORGANIC COMPOUND, AND RADIOCHEMISTRY ANALYTICAL RESULTS

FOR THE 881 FOOTING DRAIN DISCHARGE

WELLS/STATIONS IN THIS GROUP:
SW-45

BUILDING 881 FOOTING DRAIN DISCHARGE
VOLATILE ORGANIC RESULTS

Surface Water Volatile Organic Results
For Stations at Rockwell (Rocky Flats)

BUILDING 881 FOOTING DRAIN DISCHARGE

Station Number	Date Sampled	Qtr.	Chloro methane ug/l	Bromo methane ug/l	Vinyl Chloride ug/l	Chloro ethane ug/l	Methylene Chloride ug/l	Acetone ug/l	Carbon Disulfide ug/l
SW-45	05/26/87		NR	NR	NR	NR	NR	NR	NR
SW-45	11/17/87		10 U	10 U	10 U	10 U	21	10 U	5 U
SW-45	06/28/88		10 U	10 U	10 U	10 U	5 U	10 U	5 U
SW-45	04/04/89		10 U	10 U	10 U	10 U	5 U	5 JB	5 U
SW-45	05/18/89		10 U	10 U	10 U	10 U	5 U	10 U	5 U
SW-45	05/30/89		Data not yet received						
SW-45	06/21/89		Data not yet received						
SW-45	07/18/89		Data not yet received						
SW-45	08/16/89		Data not yet received						

NR = Analyte not reported
J = Present below detected limit
U = Analyzed but not detected
B = Present in laboratory blank
* = Holding time not met
N = Batch spike not in 80-120% range
E = Estimated value
R = Data rejected during vallidation

Surface Water Volatile Organic Results
For Stations at Rockwell (Rocky Flats)

BUILDING 881 FOOTING DRAIN DISCHARGE

Station Number	Date Sampled	Qtr.	1,1-Di chloro ethene ug/l	1,1-Di-chloro ethane ug/l	Trans-1,2-Dichloro ethene ug/l	Chloroform ug/l	1,2-Di-chloro ethane ug/l	2-Butanone ug/l	1,1,1-Tri chloro ethane ug/l
SW-45	05/26/87		4 U	NR	NR	4 U	4 U	NR	4 U
SW-45	11/17/87		5 U	5 U	NR	5 U	5 U	10 U	5 U
SW-45	06/28/88		5 U	5 U	5 U	5 U	5 U	10 U	5 U
SW-45	04/04/89		5 U	5 U	NR	5 U	5 U	10 U	5 U
SW-45	05/18/89		5 U	5 U	NR	5 U	5 U	10 U	5 U
SW-45	05/30/89		Data not yet received						
SW-45	06/21/89		Data not yet received						
SW-45	07/18/89		Data not yet received						
SW-45	08/16/89		Data not yet received						

NR = Analyte not reported
J = Present below detected limit
U = Analyzed but not detected
B = Present in laboratory blank
* = Holding time not met
N = Batch spike not in 80-120% range
E = Estimated value
R = Data rejected during vallidation

Surface Water Volatile Organic Results
For Stations at Rockwell (Rocky Flats)

BUILDING 881 FOOTING DRAIN DISCHARGE

Station Number	Date Sampled	Qtr.	Carbon Tetra chloride ug/l	Vinyl Acetone ug/l	Bromo dichloro methane ug/l	1,2-Di-chloro propane ug/l	Cis-1,3-Dichloro propene ug/l	Trichloro ethene ug/l	Dibromo chloro methane ug/l
SW-45	05/26/87		4 U	NR	NR	NR	NR	14	NR
SW-45	11/17/87		6	10 U	5 U	5 U	5 U	8	5 U
SW-45	06/28/88		5 U	10 U	5 U	5 U	5 U	5 U	5 U
SW-45	04/04/89		5 U	10 U	5 U	5 U	5 U	5 U	5 U
SW-45	05/18/89		5 U	10 U	5 U	5 U	5 U	5 U	5 U
SW-45	05/30/89		Data not yet received						
SW-45	06/21/89		Data not yet received						
SW-45	07/18/89		Data not yet received						
SW-45	08/16/89		Data not yet received						

NR = Analyte not reported
J = Present below detected limit
U = Analyzed but not detected
B = Present in laboratory blank
* = Holding time not met
N = Batch spike not in 80-120% range
E = Estimated value
R = Data rejected during vallidation

Surface Water Volatile Organic Results
For Stations at Rockwell (Rocky Flats)

BUILDING 881 FOOTING DRAIN DISCHARGE

Station Number	Date Sampled	Qtr.	1,1,2-Tri chloro ethane ug/l	Benzene ug/l	Trans-1,3-Dichloro propoene ug/l	2-Chloro ethylvinyl ether ug/l	Bromoform ug/l	4-Methyl-2-penta none ug/l	2-Hexanone ug/l
SW-45	05/26/87		4 U	NR	NR	NR	NR	NR	NR
SW-45	11/17/87		5 U	5 U	5 U	NR	5 U	10 U	10 U
SW-45	06/28/88		5 U	5 U	5 U	10 U	5 U	10 U	10 U
SW-45	04/04/89		5 U	5 U	5 U	NR	5 U	10 U	10 U
SW-45	05/18/89		5 U	5 U	5 U	NR	5 U	10 U	10 U
SW-45	05/30/89		Data not yet received						
SW-45	06/21/89		Data not yet received						
SW-45	07/18/89		Data not yet received						
SW-45	08/16/89		Data not yet received						

NR = Analyte not reported
J = Present below detected limit
U = Analyzed but not detected
B = Present in laboratory blank
* = Holding time not met
N = Batch spike not in 80-120% range
E = Estimated value
R = Data rejected during vallidation

Surface Water Volatile Organic Results
For Stations at Rockwell (Rocky Flats)

BUILDING 881 FOOTING DRAIN DISCHARGE

Station Number	Date Sampled	Qtr.	Tetra chloro ethene ug/l	1,1,2,2-Tetrachloro ethane ug/l	Toluene ug/l	Chloro benzene ug/l	Ethyl benzene ug/l	Styrene ug/l	Total Xylenes ug/l
SW-45	05/26/87		128	NR	NR	NR	NR	NR	NR
SW-45	11/17/87		16	5 U	12	5 U	5 U	5 U	5 U
SW-45	06/28/88		3 J	5 U	5 U	5 U	5 U	5 U	5 U
SW-45	04/04/89		2 J	5 U	5 U	5 U	5 U	5 U	5 U
SW-45	05/18/89		8	5 U	5 U	5 U	5 U	5 U	5 U
SW-45	05/30/89		Data not yet received						
SW-45	06/21/89		Data not yet received						
SW-45	07/18/89		Data not yet received						
SW-45	08/16/89		Data not yet received						

NR = Analyte not reported
J = Present below detected limit
U = Analyzed but not detected
B = Present in laboratory blank
* = Holding time not met
N = Batch spike not in 80-120% range
E = Estimated value
R = Data rejected during vallidation

BUILDING 881 FOOTING DRAIN DISCHARGE
DISSOLVED METAL RESULTS

Surface Water Dissolved Metals Results
For Stations at Rockwell (Rocky Flats)

BUILDING 881 FOOTING DRAIN DISCHARGE

Station Number	Date Sampled	Qtr.	Aluminum (Al), diss. mg/l	Antimony (Sb), diss. mg/l	Arsenic (As), diss. mg/l	Barium (Ba), diss. mg/l	Beryllium (Be), diss. mg/l	Cadmium (Cd), diss. mg/l	Calcium (Ca), diss. mg/l
SW-45	05/26/87		NR	0.06 U	0.01 U	NR	NR	0.005 U	NR
SW-45	11/17/87		0.0436	0.02 U	0.005 U	0.1547	0.005 U	0.0017	85.3425
SW-45	06/28/88		0.200 U	0.060 U	0.010	0.200 U	0.005 U	0.005 U	78.0

NR = analyte not reported
J = Present below detection limit
U = Analyzed but not detected
B = Present in laboratory blank
* = Holding time not met
N = Batch spike not in 80-120% range
E = Estimated value
R = Data rejected during validation.

Surface Water Dissolved Metals Results
For Stations at Rockwell (Rocky Flats)

BUILDING 881 FOOTING DRAIN DISCHARGE

Station Number	Date Sampled	Qtr.	Cesium (Cs), diss. mg/l	Chromium (Cr), diss. mg/l	Cobalt (Co), diss. mg/l	Copper (Cu), diss. mg/l	Iron (Fe), diss. mg/l	Lead (Pb), diss. mg/l	Lithium (Li), diss. mg/l
SW-45	05/26/87		0.2 U	NR	NR	NR	NR	0.005 U	0.01
SW-45	11/17/87		0.02 U	0.0100 U	0.0220 U	0.0111	0.0279	0.005 U	0.01 U
SW-45	06/28/88		NR	0.010 U	0.050 U	0.025 U	0.100 U	0.005 U	NR

NR = analyte not reported
J = Present below detection limit
U = Analyzed but not detected
B = Present in laboratory blank
* = Holding time not met
N = Batch spike not in 80-120% range
E = Estimated value
R = Data rejected during validation.

Surface Water Dissolved Metals Results
For Stations at Rockwell (Rocky Flats)

BUILDING 881 FOOTING DRAIN DISCHARGE

Station Number	Date Sampled	Qtr.	Magnesium (Mg), diss. mg/l	Manganese (Mn), diss. mg/l	Mercury (Hg), diss. mg/l	Molybdenum (Mo), diss. mg/l	Nickel (Ni), diss. mg/l	Potassium (K), diss. mg/l	Selenium (Se), diss. mg/l
SW-45	05/26/87		NR	NR	0.0002 U	NR	NR	5.0 U	0.005 U
SW-45	11/17/87		19.0212	0.0060	0.0002 U	0.0220 U	0.0370 U	3.8	0.018
SW-45	06/28/88		21.0	0.015 U	0.90	NR	0.040 U	5.0 U	0.005 U

NR = analyte not reported
J = Present below detection limit
U = Analyzed but not detected
B = Present in laboratory blank
* = Holding time not met
N = Batch spike not in 80-120% range
E = Estimated value
R = Data rejected during validation.

Surface Water Dissolved Metals Results
For Stations at Rockwell (Rocky Flats)

BUILDING 881 FOOTING DRAIN DISCHARGE

Station Number	Date Sampled	Qtr.	Silver (Ag), diss. mg/l	Sodium (Na), diss. mg/l	Tin (Sn), diss. mg/l	Strontium (Sr), diss. mg/l	Thallium (Tl), diss. mg/l	Vanadium (V), diss. mg/l	Zinc (Zn), diss. mg/l
SW-45	05/26/87		NR	NR	NR	NR	0.01 U	NR	0.05 U
SW-45	11/17/87		0.0076 U	41.7614	NR	0.6411	0.01 U	0.240 U	0.0426
SW-45	06/28/88		0.010 U	46	NR	0.7	0.010 U	0.050 U	0.6

NR = analyte not reported
J = Present below detection limit
U = Analyzed but not detected
B = Present in laboratory blank
* = Holding time not met
N = Batch spike not in 80-120% range
E = Estimated value
R = Data rejected during validation.

BUILDING 881 FOOTING DRAIN DISCHARGE
INORGANIC COMPOUND RESULTS

Surface Water Inorganic Results
For Stations at Rockwell (Rocky Flats)
BUILDING 881 FOOTING DRAIN DISCHARGE

Station Number	Date Sampled		Total Dissolved Solids MG/L	Chloride MG/L	Nitrate+ Nitrite-Nitrogen MG/L	Sulfate MG/L	HC03- MG/L
SW45	05/26/87		456	74.1	8.50	44.0	216
SW45	11/17/87		INSUFFICIENT SAMPLE FOR INORGANIC ANALYSIS				
SW45	06/28/88		464	77	8	56	232

Notes: NR = Analyte not reported
J = Present below detection limit
U = Analyzed but not detected
B = Present in laboratory blank

BUILDING 881 FOOTING DRAIN DISCHARGE
TOTAL RADIOCHEMISTRY RESULTS

TOTAL RADIOCHEMISTRY RESULTS SUMMARY
FOR SURFACE WATER AT Rockwell (Rocky Flats)

Analyte	Maximum Value	Minium Value	Number of Samples: Above Detection	Number of Samples: Below Detection	Number of Samples: Not Reported	Mean Value*
BUILDING 881 FOOTING DRAIN DISCHARGE						
Gross Alpha (pci/l)	13 ± 18	13 ± 18	1	0	1	13
Gross Beta (pci/l)	14 ± 31	14 ± 31	1	0	1	14
Uranium 233, 234 (pci/l)	5.5 ± 1.9	4.96 ± 0.439	2	0	0	5.230
Uranium 235 (pci/l)	0.0 ± .37	0.0 ± .37	1	0	1	0.000
Uranium 238 (pci/l)	4.7 ± 1.7	3.84 ± 0.416	2	0	0	4.270
Strontium 89, 90 (pci/l)	1.78 ±	1.78 ±	1	0	1	1.780
Plutonium 239, 240 (pci/l)	0.0312 ± 0.0824	0.0 ± .55	2	0	0	0.016
Americium 241 (pci/l)	0.0 ± 1.2	0.0 ± 1.2	1	0	1	0.000
Cesium 137 (pci/l)	<0.3 ±	<0.3 ±	1	0	1	0.000
Tritium (pci/l)	638 ± 315	<110 ±	2	0	0	319

* - For activities above detection only.

Surface Water Total Radiochemistry Results
for Stations Units at Rocky Plant

BUILDING 881 FOOTING DRAIN DISCHARGE

Station Number	Date Sampled		Gross Alpha pCi/l	Gross Beta pCi/l	Uranium 233, 234 pCi/l		Uranium 235 pCi/l
SW045	05/26/87		13 ± 18	14 ± 31	5.5 ± 1.9		0.0 ± .37
SW045	11/17/87		***				
SW045	06/28/88		NR	NR	4.96 ± 0.439	0.2	NR

Notes: NR = Analyte not reported
*** = Insufficient Sample for Radiochemistry Analyses

Surface Water Total Radiochemistry Results
for Stations Units at Rocky Flats Plant

BUILDING 881 FOOTING DRAIN DISCHARGE

Station Number	Date Sampled		Uranium 238 pCi/l		Strontium 89, 90 pCi/l	Plutonium 239 pCi/l		Americium 241 pCi/l
SW045	05/26/87		4.7 ± 1.7		1.78	0.0 ± .55		0.0 ± 1.2
SW045	11/17/87		***					
SW045	06/28/88		3.84 ± 0.416	0.3	NR	0.0312 ± 0.0824	0.1	NR

Notes: NR = Analyte not reported
*** = Insufficient Sample for Radiochemistry Analyses

Surface Water Total Radiochemistry Results
for Stations Units at Rocky Flats Plant

BUILDING 881 FOOTING DRAIN DISCHARGE

Station Number	Date Sampled		Cesium 137 pCi/l	Tritium pCi/l	
SW045	05/26/87		<0.3	<110	
SW045	11/17/87		***		
SW045	06/28/87		NR	638 ± 315	500

Notes: NR = Analyte not reported
*** = Insufficient Sample for Radiochemistry Analyses

BUILDING 881 FOOTING DRAIN DISCHARGE
DISSOLVED RADIOCHEMISTRY RESULTS

DISSOLVED RADIOCHEMISTRY RESULTS SUMMARY
FOR SURFACE WATER AT RockweLL (Rocky Flats)

Analyte	Maximum Value	Minimum Value	Number of Samples: Above Detection	Below Detection	Not Reported	Mean Value*
BUILDING 881 FOOTING DRAIN DISCHARGE						
Gross Alpha (pci/l)	13.4 ± 5.11	13.4 ± 5.11	1	0	0	13
Gross Beta (pci/l)	15.1 ± 5.38	15.1 ± 5.38	1	0	0	15
Uranium 233, 234 (pci/l)	5.79 ± 0.818	5.79 ± 0.818	1	0	0	5.790
Uranium 235 ( )			0	0	1	
Uranium 238 (pci/l)	4.38 ± 0.735	4.38 ± 0.735	1	0	0	4.380
Strontium 89, 90 ( )			0	0	1	
Plutonium 239, 240 (pci/l)	2.57 ± 0.733	2.57 ± 0.733	1	0	0	2.570
Americium 241 ( )			0	0	1	
Cesium 137 ( )			0	0	1	
Tritium ( )			0	0	1	

* - For activities above detection only.

Surface Water Dissolved Radiochemistry Results

for Regulated Units at Rocky Flats Plant

BUILDING 881 FOOTING DRAIN DISCHARGE

Station Number	Date Sampled	Gross Alpha PCI/L	(MDA)	Gross Beta PCI/L	(MDA)	Uranium 233, 234 PCI/L	(MDA)	Uranium 235 PCI/L	(MDA)
SW45	05/26/87	***							
SW45	11/17/87	***							
SW45	06/28/88	13.4 ± 5.11	6	15.2 ± 5.38	8	5.79 ± 0.818	0.1	NR	

Notes: NR = Analyte not reported
*** = Insufficient Sample for Radiochemistry Analyses

Surface Water Dissolved Radiochemistry Results

for Regulated Units at Rocky Flats Plant

BUILDING 881 FOOTING DRAIN DISCHARGE

Station Number	Date Sampled		Uranium 238 PCI/L	(MDA)	Strontium 89, 90 PCI/L	(MDA)	Plutonium 239, 240 PCI/L	(MDA)	Americanum 241 PCI/L(MDA)
SW45	05/26/87		***						
SW45	11/17/87		***						
SW45	06/28/88		4.38 ± 0.735	0.2	NR		2.57 ± 0.733	0.6	NR

Notes: NR = Analyte not reported
*** = Insufficient Sample for Radiochemistry Analyses

Surface Water Dissolved Radiochemistry Results

for Regulated Units at Rocky Flats Plant

BUILDING 881 FOOTING DRAIN DISCHARGE

Station Number	Date Sampled		Cesium 137 PCI/L	(MDA)	Tritium PCI/L	(MDA)
SW45	05/26/87		***			
SW45	11/17/87		***			
SW45	06/28/88		NR		NR	

Notes: NR = Analyte not reported
*** = Insufficient Sample for Radiochemistry Analyses

SECTION 3

VOLATILE ORGANIC COMPOUND, DISSOLVED METALS,

INORGANIC COMPOUND, AND RADIOCHEMISTRY ANALYTICAL RESULTS

FOR THE ALLUVIAL WELLS DOWNGRADIENT

OF THE 881 HILLSIDE

WELLS/STATIONS IN THIS GROUP:

64-86
65-86
66-86
69-86
02-87
47-87
48-87
55-87

ALLUVIAL WELLS DOWNGRADIENT OF THE 881 HILLSIDE

VOLATILE ORGANIC RESULTS

Groundwater Volatile Organic Results

For Wells at Rockwell (Rocky Flats)

ALLUVIAL WELLS DOWNGRADIENT OF THE 881 HILLSIDE

Well Number	Date Sampled	Qtr.	Chloro methane ug/l	Bromo methane ug/l	Vinyl Chloride ug/l	Chloro ethane ug/l	Methylene Chloride ug/l	Acetone ug/l	Carbon Disulfide ug/l
64-86	04/29/87	1	NR	NR	NR	NR	NR	NR	NR
64-86	05/28/87	2	NR	NR	NR	NR	NR	NR	NR
64-86	07/16/87	3	NR	NR	NR	NR	NR	NR	NR
64-86	10/12/87	4	DRY						
64-86	02/17/88	1	10 U	10 U	10 U	10 U	5 U	10 U	5 U
64-86	04/11/88	2	10 U	10 U	10 U	10 U	5 U	10 U	5 U
64-86	07/13/88	3	DRY						
64-86	10/21/88	4	DRY						
64-86	04/24/89	2	10 U	10 U	10 U	10 U	5 U	10U R	5 U
64-86	05/31/89		10 U	10 U	10 U	10 U	5 U	2 J	5 U
64-86	07/10/89		Data not yet received						
65-86	05/13/87	1	NR	NR	NR	NR	NR	NR	NR
65-86	05/28/87	2	NR	NR	NR	NR	NR	NR	NR
65-86	07/16/87	3	NR	NR	NR	NR	NR	NR	NR
65-86	09/09/87	3	NR	NR	NR	NR	NR	NR	NR
65-86	10/19/87	4	DRY						
65-86	02/29/88	1	10 U	10 U	10 U	10 U	8	10 U	5 U
65-86	04/18/88	2	10 U	10 U	10 U	10 U	5 U	10 U	5 U

NR = Analyte not reported
J = Present below detection limit
U = Analyzed but not detected
B = Present in laboratory blank
* = Holding time not met
N = Batch spike not in 80-120% range
E =Estimated value
R = Data rejected during validation.

Groundwater Volatile Organic Results

For Wells at Rockwell (Rocky Flats)

ALLUVIAL WELLS DOWNGRADIENT OF THE 881 HILLSIDE

Well Number	Date Sampled	Qtr.	1,1-Di-chloro ethene ug/l	1,1-Di-chloro ethane ug/l	Trans-1,2-Dichloro ethene ug/l	Chloroform ug/l	1,2-Di-chloro ethane ug/l	2-Butanone ug/l	1,1,1-Tri chloro ethane ug/l
64-86	04/29/87	1	4 U	NR	NR	4 U	4 U	NR	4 U
64-86	05/28/87	2	4 U	NR	NR	4 U	4 U	NR	4 U
64-86	07/16/87	3	4 U	NR	NR	4 U	4 U	NR	4 U
64-86	10/12/87	4	DRY						
64-86	02/17/88	1	5 U	5 U	NR	5 U	5 U	10 U	5 U
64-86	04/11/88	2	5 U	5 U	NR	5 U	5 U	10 U	5 U
64-86	07/13/88	3	DRY						
64-86	10/21/88	4	DRY						
64-86	04/24/89	2	5 U	5 U	NR	5 U	5 U	10 U	5 U
64-86	05/31/89		5 U	5 U	NR	5 U	5 U	10 U	5 U
64-86	07/10/89		Data not yet received						
65-86	05/13/87	1	4 U	NR	NR	4 U	4 U	NR	4 U
65-86	05/28/87	2	4 U	NR	NR	4 U	4 U	NR	4 U
65-86	07/16/87	3	4 U	NR	NR	4 U	4 U	NR	4 U
65-86	09/09/87	3	5 U	NR	NR	5 U	5 U	NR	5 U
65-86	10/19/87	4	DRY						
65-86	02/29/88	1	5 U	5 U	NR	5 U	5 U	10 U	5 U
65-86	04/18/88	2	5 U	5 U	NR	5 U	5 U	10 U	5 U

NR = Analyte not reported
J = Present below detection limit
U = Analyzed but not detected
B = Present in laboratory blank
* = Holding time not met
N = Batch spike not in 80-120% range
E =Estimated value
R = Data rejected during validation.

Groundwater Volatile Organic Results

For Wells at Rockwell (Rocky Flats)

ALLUVIAL WELLS DOWNGRADIENT OF THE 881 HILLSIDE

Well Number	Date Sampled	Qtr.	Carbon Tetra chloride ug/l	Vinyl Acetate ug/l	Bromo dichloro methane ug/l	1,2-Di-chloro propane ug/l	Cis-1,3-Dichloro propene ug/l	Trichloro ethene ug/l	Dibromo chloro methane ug/l
64-86	04/29/87	1	4 U	NR	NR	NR	NR	4 U	NR
64-86	05/28/87	2	4 U	NR	NR	NR	NR	4 U	NR
64-86	07/16/87	3	4 U	NR	NR	NR	NR	4 U	NR
64-86	10/12/87	4	DRY						
64-86	02/17/88	1	5 U	10 U	5 U	5 U	5 U	5 U	5 U
64-86	04/11/88	2	5 U	10 U	5 U	5 U	5 U	5 U	5 U
64-86	07/13/88	3	DRY						
64-86	10/21/88	4	DRY						
64-86	04/24/89	2	5 U	10U R	5 U	5 U	5 U	5 U	5 U
64-86	05/31/89		5 U	10 U	5 U	5 U	5 U	5 U	5 U
64-86	07/10/89		Data not yet received						
65-86	05/13/87	1	4 U	NR	NR	NR	NR	4 U	NR
65-86	05/28/87	2	4 U	NR	NR	NR	NR	4 U	NR
65-86	07/16/87	3	4 U	NR	NR	NR	NR	4 U	NR
65-86	09/09/87	3	5 U	NR	NR	NR	NR	5 U	NR
65-86	10/19/87	4	DRY						
65-86	02/29/88	1	5 U	10 U	5 U	5 U	5 U	5 U	5 U
65-86	04/18/88	2	5 U	10 U	5 U	5 U	5 U	5 U	5 U

NR = Analyte not reported
J = Present below detection limit
U = Analyzed but not detected
B = Present in laboratory blank
* = Holding time not met
N = Batch spike not in 80-120% range
E =Estimated value
R = Data rejected during validation.

Groundwater Volatile Organic Results

For Wells at Rockwell (Rocky Flats)

ALLUVIAL WELLS DOWNGRADIENT OF THE 881 HILLSIDE

Well Number	Date Sampled	Qtr.	1,1,2-Tri chloro ethane ug/l	Benzene ug/l	Trans-1,3- Dichloro propene ug/l	2-Chloro ethylvinyl ether ug/l	Bromoform ug/l	4-Methyl- 2-penta none ug/l	2-Hexanone ug/l
64-86	04/29/87	1	4 U	NR	NR	NR	NR	NR	NR
64-86	05/28/87	2	4 U	NR	NR	NR	NR	NR	NR
64-86	07/16/87	3	4 U	NR	NR	NR	NR	NR	NR
64-86	10/12/87	4	DRY						
64-86	02/17/88	1	5 U	5 U	5 U	10 U	5 U	10 U	10 U
64-86	04/11/88	2	5 U	5 U	5 U	10 U	5 U	10 U	10 U
64-86	07/13/88	3	DRY						
64-86	10/21/88	4	DRY						
64-86	04/24/89	2	5 U	5 U	5 U	NR	5 U	10 U	10 U
64-86	05/31/89		5 U	5 U	5 U	NR	5 U	10 U	10 U
64-86	07/10/89		Data not yet received						
65-86	05/13/87	1	4 U	NR	NR	NR	NR	NR	NR
65-86	05/28/87	2	4 U	NR	NR	NR	NR	NR	NR
65-86	07/16/87	3	4 U	NR	NR	NR	NR	NR	NR
65-86	09/09/87	3	5 U	NR	NR	NR	NR	NR	NR
65-86	10/19/87	4	DRY						
65-86	02/29/88	1	5 U	5 U	5 U	10 U	5 U	10 U	10 U
65-86	04/18/88	2	5 U	5 U	5 U	10 U	5 U	10 U	10 U

NR = Analyte not reported
J = Present below detection limit
U = Analyzed but not detected
B = Present in laboratory blank
* = Holding time not met
N = Batch spike not in 80-120% range
E =Estimated value
R = Data rejected during validation.

Groundwater Volatile Organic Results

For Wells at Rockwell (Rocky Flats)

ALLUVIAL WELLS DOWNGRADIENT OF THE 881 HILLSIDE

Well Number	Date Sampled	Qtr.	Tetra chloro ethene ug/l	1,1,2,2-Tetrachloro ethane ug/l	Toluene ug/l	Chloro benzene ug/l	Ethyl benzene ug/l	Styrene ug/l	Total Xylenes ug/l
64-86	04/29/87	1	4 U	NR	NR	NR	NR	NR	NR
64-86	05/28/87	2	4 U	NR	NR	NR	NR	NR	NR
64-86	07/16/87	3	4 U	NR	NR	NR	NR	NR	NR
64-86	10/12/87	4	DRY						
64-86	02/17/88	1	5 U	5 U	5 U	5 U	5 U	5 U	5 U
64-86	04/11/88	2	5 U	5 U	5 U	5 U	5 U	5 U	5 U
64-86	07/13/88	3	DRY						
64-86	10/21/88	4	DRY						
64-86	04/24/89	2	8 J	5 U	5 U	5 U	5 U	5 U	5 U
64-86	05/31/89		5 U	5 U	5 U	5 U	5 U	5 U	5 U
64-86	07/10/89		Data not yet received						
65-86	05/13/87	1	4 U	NR	NR	NR	NR	NR	NR
65-86	05/28/87	2	4 U	NR	NR	NR	NR	NR	NR
65-86	07/16/87	3	4 U	NR	NR	NR	NR	NR	NR
65-86	09/09/87	3	5 U	NR	NR	NR	NR	NR	NR
65-86	10/19/87	4	DRY						
65-86	02/29/88	1	5 U	5 U	5 U	5 U	5 U	5 U	5 U
65-86	04/18/88	2	5 U	5 U	5 U	5 U	5 U	5 U	5 U

NR = Analyte not reported
J = Present below detection limit
U = Analyzed but not detected
B = Present in laboratory blank
* = Holding time not met
N = Batch spike not in 80-120% range
E =Estimated value
R = Data rejected during validation.

Groundwater Volatile Organic Results

For Wells at Rockwell (Rocky Flats)

ALLUVIAL WELLS DOWNGRADIENT OF THE 881 HILLSIDE

Well Number	Date Sampled	Qtr.	Chloro methane ug/l	Bromo methane ug/l	Vinyl Chloride ug/l	Chloro ethane ug/l	Methylene Chloride ug/l	Acetone ug/l	Carbon Disulfide ug/l
65-86	07/29/88	3	DRY						
65-86	10/21/88	4	DRY						
65-86	06/01/89		10 U	10 U	10 U	10 U	5 U	10 U	3 J
65-86	07/20/89		Data not yet received						
66-86	05/11/87	1	NR	NR	NR	NR	NR	NR	NR
66-86	05/28/87	2	NR	NR	NR	NR	NR	NR	NR
66-86	07/17/87	3	DRY						
66-86	10/19/87	4	DRY						
66-86	03/31/88	1	10 U	10 U	10 U	10 U	23	10 U	5 U
66-86	06/02/88	2	10 U	10 U	10 U	10 U	5 U	10 U	5 U
66-86	10/07/88		DRY						
66-86	12/23/88		DRY						
66-86	06/02/89		Data not yet received						
66-86	07/20/89		Date not yet received						
69-86	04/29/87	1	NR	NR	NR	NR	NR	NR	NR

NR = Analyte not reported
J = Present below detection limit
U = Analyzed but not detected
B = Present in laboratory blank
* = Holding time not met
N = Batch spike not in 80-120% range
E =Estimated value
R = Data rejected during validation.

Groundwater Volatile Organic Results

For Wells at Rockwell (Rocky Flats)

ALLUVIAL WELLS DOWNGRADIENT OF THE 881 HILLSIDE

Well Number	Date Sampled	Qtr.	1,1-Di-Chloro ethene ug/l	1,1-Di-chloro ethane ug/l	Trans-1,2-Dichloro ethene ug/l	Chloroform ug/l	1,2-Di-chloro ethane ug/l	2-Butanone ug/l	1,1,1-Tri chloro ethane ug/l
65-86	07/19/88	3	DRY						
65-86	10/21/88	4	DRY						
65-86	06/01/89		5 U	5 U	NR	5 U	5 U	10 U	5 U
65-86	07/20/89		Data not yet received						
66-86	05/11/87	1	4 U	NR	NR	4 U	4 U	NR	4 U
66-86	05/28/87	2	4 U	NR	NR	4 U	4 U	NR	4 U
66-86	07/17/87	3	DRY						
66-86	10/19/87	4	DRY						
66-86	03/31/88	1	5 U	5 U	NR	5 U	5 U	10 U	5 U
66-86	06/02/88	2	5 U	5 U	NR	5 U	5 U	10 U	5 U
66-86	10/07/88		DRY						
66-86	12/23/88		DRY						
66-86	06/02/89		Data not yet received						
66-86	07/20/89		Date not yet received						
69-86	04/29/87	1	4 U	NR	NR	4 U	4 U	NR	4 U

NR = Analyte not reported
J = Present below detection limit
U = Analyzed but not detected
B = Present in laboratory blank
* = Holding time not met
N = Batch spike not in 80-120% range
E =Estimated value
R = Data rejected during validation.

Groundwater Volatile Organic Results

For Wells at Rockwell (Rocky Flats)

ALLUVIAL WELLS DOWNGRADIENT OF THE 881 HILLSIDE

Well Number	Date Sampled	Qtr.	Carbon Tetra chloride ug/l	Vinyl Acetate ug/l	Bromo dichloro methane ug/l	1,2-Di-chloro propane ug/l	Cis-1,3-Dichloro propene ug/l	Trichloro ethene ug/l	Dibromo chloro methane ug/l
65-86	07/19/88	3	DRY						
65-86	10/21/88	4	DRY						
65-86	06/01/89		5 U	10 U	5 U	5 U	5 U	5 U	3 J
65-86	07/20/89		Data not yet received						
66-86	05/11/87	1	4 U	NR	NR	NR	NR	4 U	NR
66-86	05/28/87	2	4 U	NR	NR	NR	NR	4 U	NR
66-86	07/17/87	3	DRY						
66-86	10/19/87	4	DRY						
66-86	03/31/88	1	5 U	10 U	5 U	5 U	5 U	5 U	5 U
66-86	06/02/88	2	5 U	10 U	5 U	5 U	5 U	5 U	5 U
66-86	10/07/88		DRY						
66-86	12/23/88		DRY						
66-86	06/02/89		Data not yet received						
66-86	07/20/89		Date not yet received						
69-86	04/29/87	1	4 U	NR	NR	NR	NR	4 U	NR

NR = Analyte not reported
J = Present below detection limit
U = Analyzed but not detected
B = Present in laboratory blank
* = Holding time not met
N = Batch spike not in 80-120% range
E =Estimated value
R = Data rejected during validation.

Groundwater Volatile Organic Results

For Wells at Rockwell (Rocky Flats)

ALLUVIAL WELLS DOWNGRADIENT OF THE 881 HILLSIDE

Well Number	Date Sampled	Qtr.	1,1,2-Tri chloro ethane ug/l	Benzene ug/l	Trans-1,3- Dichloro propene ug/l	2-Chloro ethylvinyl ether ug/l	Bromoform ug/l	4-Methyl- 2-penta none ug/l	2-Hexanone ug/l
65-86	07/19/88	3	DRY						
65-86	10/21/88	4	DRY						
65-86	06/01/89		5 U	5 U	5 U	NR	5 U	10 U	10 U
65-86	07/20/89		Data not yet received						
66-86	05/11/87	1	4 U	NR	NR	NR	NR	NR	NR
66-86	05/28/87	2	4 U	NR	NR	NR	NR	NR	NR
66-86	07/17/87	3	DRY						
66-86	10/19/87	4	DRY						
66-86	03/31/88	1	5 U	5 U	5 U	NR	5 U	10 U	10 U
66-86	06/02/88	2	5 U	5 U	5 U	10 U	5 U	10 U	10 U
66-86	10/07/88		DRY						
66-86	12/23/88		DRY						
66-89	06/02/89		Data not yet received						
66-89	07/20/89		Date not yet received						
69-86	04/29/87	1	4 U	NR	NR	NR	NR	NR	NR

NR = Analyte not reported
J = Present below detection limit
U = Analyzed but not detected
B = Present in laboratory blank
* = Holding time not met
N = Batch spike not in 80-120% range
E =Estimated value
R = Data rejected during validation.

Groundwater Volatile Organic Results

For Wells at Rockwell (Rocky Flats)

ALLUVIAL WELLS DOWNGRADIENT OF THE 881 HILLSIDE

Well Number	Date Sampled	Qtr.	Tetra chloro ethene ug/l	1,1,2,2-Tetrachloro ethane ug/l	Toluene ug/l	Chloro benzene ug/l	Ethyl benzene ug/l	Styrene ug/l	Total Xylenes ug/l
65-86	07/19/88	3	DRY						
65-86	10/21/88	4	DRY						
65-86	06/01/89		5 U	5 U	5 U	5 U	5 U	5 U	5 U
65-86	07/20/89		Data not yet received						
66-86	05/11/87	1	4 U	NR	NR	NR	NR	NR	NR
66-86	05/28/87	2	4 U	NR	NR	NR	NR	NR	NR
66-86	07/17/87	3	DRY						
66-86	10/19/87	4	DRY						
66-86	03/31/88	1	5 U	5 U	5 U	5 U	5 U	5 U	5 U
66-86	06/02/88	2	5 U	5 U	5 U	5 U	5 U	5 U	5 U
66-86	10/07/88		DRY						
66-86	12/23/88		DRY						
66-86	06/02/89		Data not yet received						
66-86	07/20/89		Date not yet received						
69-86	04/29/87	1	4 U	NR	NR	NR	NR	NR	NR

NR = Analyte not reported
J = Present below detection limit
U = Analyzed but not detected
B = Present in laboratory blank
* = Holding time not met
N = Batch spike not in 80-120% range
E =Estimated value
R = Data rejected during validation.

Groundwater Volatile Organic Results

For Wells at Rockwell (Rocky Flats)

ALLUVIAL WELLS DOWNGRADIENT OF THE 881 HILLSIDE

Well Number	Date Sampled	Qtr.	Chloro methane ug/l	Bromo methane ug/l	Vinyl Chloride ug/l	Chloro ethane ug/l	Methylene Chloride ug/l	Acetone ug/l	Carbon Disulfide ug/l
69-86	05/26/87	2	NR	NR	NR	NR	NR	NR	NR
69-86	07/06/87	3	NR	NR	NR	NR	NR	NR	NR
69-86	10/07/87	4	NR	NR	NR	NR	NR	NR	NR
69-86	10/08/87		INSUFFICIENT SAMPLE FOR VOLATILE ORGANIC ANALYSIS						
69-86	02/10/88	1	10 U	10 U	10 U	10 U	5 U	10 U	5 U
69-86	04/11/88	2	10 U	10 U	10 U	10 U	5 U	10 U	5 U
69-86	07/18/88	3	10 U	10 U	10 U	10 U	5 U	10 U	5 U
69-86	10/20/88	4	10 U	10 U	10 U	10 U	5 U	10 U	5 U
69-86	01/12/89	1	10U R	10U R	10 U	10U R	5 U	10 U	5 U
69-86	04/17/89	2	10 U	10 U	10 U	10 U	5 U	10 U	5 U
69-89	05/26/89		10 U	10 U	10 U	10 U	5 U	10 U	5 U
69-86	8/11/89		Data not yet received						
02-87	05/29/87	2	INSUFFICIENT SAMPLE FOR VOLATILE ORGANIC ANALYSIS						
02-87	06/24/87	2	10U	10U	10U	10U	35 B	65 B	5U
02-87	07/09/87	3	NR	NR	NR	NR	NR	NR	NR
02-87	10/07/87	4	NR	NR	NR	NR	NR	NR	NR
02-87	10/08/87	4	INSUFFICIENT SAMPLE FOR VOLATILE ORGANIC ANALYSIS						
02-87	02/10/88	1	10 U	10 U	10 U	10 U	5 U	10 U	5 U

NR = Analyte not reported
J = Present below detection limit
U = Analyzed but not detected
B = Present in laboratory blank
* = Holding time not met
N = Batch spike not in 80-120% range
E =Estimated value
R = Data rejected during validation.

Groundwater Volatile Organic Results

For Wells at Rockwell (Rocky Flats)

ALLUVIAL WELLS DOWNGRADIENT OF THE 881 HILLSIDE

Well Number	Date Sampled	Qtr.	1,1-Di-chloro ethene ug/l	1,1-Di-chloro ethane ug/l	Trans-1,2-Dichloro ethene ug/l	Chloroform ug/l	1,2-Di-chloro ethane ug/l	2-Butanone ug/l		1,1,1-Tri chloro ethane ug/l
69-86	05/26/87	2	4 U	NR	NR	4 U	4 U	NR		4 U
69-86	07/06/87	3	4 U	NR	NR	4 U	4 U	NR		4 U
69-86	10/07/87	4	5 U	NR	NR	5 U	5 U	NR		5 U
69-86	10/08/87		INSUFFICIENT SAMPLE FOR VOLATILE ORGANIC ANALYSIS							
69-86	02/10/88	1	5 U	5 U	NR	5 U	5 U	10 U		5 U
69-86	04/11/88	2	5 U	5 U	NR	5 U	5 U	10 U		5 U
69-86	07/18/88	3	5 U	5 U	NR	5 U	5 U	10 U		5 U
69-86	10/20/88	4	5 U	5 U	NR	5 U	5 U	10 U		5 U
69-86	01/12/89	1	5 U	5 U	NR	5 U	5 U	10U	R	5 U
69-86	04/17/89	2	5 U	5 U	NR	5 U	5 U	10 U		5 U
69-86	05/26/89		5 U	5 U	NR	5 U	5 U	10 U		5 U
69-86	08/11/89		Data not yet received							
02-87	05/29/87	2	INSUFFICIENT SAMPLE FOR VOLATILE ORGANIC ANALYSIS							
02-87	06/24/87	2	5U	5U	5U	5U	5U	10 U		5U
02-87	07/09/87	3	6	NR	NR	4 U	4 U	NR		4 U
02-87	10/07/87	4	5 U	NR	NR	5 U	5 U	NR		5 U
02-87	10/08/87	4	INSUFFICIENT SAMPLE FOR VOLATILE ORGANIC ANALYSIS							
02-87	02/10/88	1	5 U	5 U	NR	5 U	5 U	10 U		5 U

NR = Analyte not reported
J = Present below detection limit
U = Analyzed but not detected
B = Present in laboratory blank
* = Holding time not met
N = Batch spike not in 80-120% range
E =Estimated value
R = Data rejected during validation.

Groundwater Volatile Organic Results

For Wells at Rockwell (Rocky Flats)

ALLUVIAL WELLS DOWNGRADIENT OF THE 881 HILLSIDE

Well Number	Date Sampled	Qtr.	Carbon Tetra chloride ug/l	Vinyl Acetate ug/l	Bromo dichloro methane ug/l	1,2-Di-chloro propane ug/l	Cis-1,3-Dichloro propene ug/l	Trichloro ethene ug/l	Dibromo chloro methane ug/l
69-86	05/26/87	2	4 U	NR	NR	NR	NR	4 U	NR
69-86	07/06/87	3	4 U	NR	NR	NR	NR	4 U	NR
69-86	10/07/87	4	5 U	NR	NR	NR	NR	5 U	NR
69-86	10/08/87		INSUFFICIENT SAMPLE FOR VOLATILE ORGANIC ANALYSIS						
69-86	02/10/88	1	5 U	10 U	5 U	5 U	5 U	5 U	5 U
69-86	04/11/88	2	5 U	10 U	5 U	5 U	5 U	5 U	5 U
69-86	07/18/88	3	5 U	10 U	5 U	5 U	5 U	5 U	5 U
69-86	10/20/88	4	5 U	10 U	5 U	5 U	5 U	5 U	5 U
69-86	01/12/89	1	5 U	10 U	5 U	5 U	5 U	5 U	5 U
69-86	04/17/89	2	5 U	10U R	5 U	5 U	5 U	5 U	5 U
69-86	05/26/89		5 U	10 U	5 U	5 U	5 U	5 U	5 U
69-86	08/11/89		Data not yet received						
02-87	05/29/87	2	INSUFFICIENT SAMPLE FOR VOLATILE ORGANIC ANALYSIS						
02-87	06/24/87	2	5U	10U	5U	5U	5U	5U	5U
02-87	07/09/87	3	4 U	NR	NR	NR	NR	4 U	NR
02-87	10/07/87	4	5 U	NR	NR	NR	NR	5 U	NR
02-87	10/08/87	4	INSUFFICIENT SAMPLE FOR VOLATILE ORGANIC ANALYSIS						
02-87	02/10/88	1	5 U	10 U	5 U	5 U	5 U	5 U	5 U

NR = Analyte not reported
J = Present below detection limit
U = Analyzed but not detected
B = Present in laboratory blank
* = Holding time not met
N = Batch spike not in 80-120% range
E =Estimated value
R = Data rejected during validation.

Groundwater Volatile Organic Results

For Wells at Rockwell (Rocky Flats)

ALLUVIAL WELLS DOWNGRADIENT OF THE 881 HILLSIDE

Well Number	Date Sampled	Qtr.	1,1,2-Tri chloro ethane ug/l	Benzene ug/l	Trans-1,3- Dichloro propene ug/l	2-Chloro ethylvinyl ether ug/l	Bromoform ug/l	4-Methyl- 2-penta none ug/l	2-Hexanone ug/l
69-86	05/26/87	2	4 U	NR	NR	NR	NR	NR	NR
69-86	07/06/87	3	4 U	NR	NR	NR	NR	NR	NR
69-86	10/07/87	4	5 U	NR	NR	NR	NR	NR	NR
69-86	10/08/87		INSUFFICIENT SAMPLE FOR VOLATILE ORGANIC ANALYSIS						
69-86	02/10/88	1	5 U	5 U	5 U	10 U	5 U	10 U	10 U
69-86	04/11/88	2	5 U	5 U	5 U	10 U	5 U	10 U	10 U
69-86	07/18/88	3	5 U	5 U	5 U	10 U	5 U	10 U	10 U
69-86	10/20/88	4	5 U	5 U	5 U	10 U	5 U	10 U	10 U
69-86	01/12/89	1	5 U	5 U	5 U	NR	5 U	10 U	10 U
69-86	04/17/89	2	5 U	5 U	5 U	NR	5 U	10 U	10 U
69-86	05/26/89		5 U	5 U	5 U	NR	5 U	10 U	10 U
69-86	08/11/89		Data not yet received						
02-87	05/29/87	2	INSUFFICIENT SAMPLE FOR VOLATILE ORGANIC ANALYSIS						
02-87	06/24/87	2	5U	5U	5U	10U	5U	10U	10U
02-87	07/09/87	3	4 U	NR	NR	NR	NR	NR	NR
02-87	10/07/87	4	5 U	NR	NR	NR	NR	NR	NR
02-87	10/08/87	4	INSUFFICIENT SAMPLE FOR VOLATILE ORGANIC ANALYSIS						
02-87	02/10/88	1	5 U	5 U	5 U	10 U	5 U	10 U	10 U

NR = analyte not reported
J = Present below detection limit
U = Analyzed but not detected
B = Present in laboratory blank
* = Holding time not met
N = Batch spike not in 80-120% range
E = Estimated value
R = Data rejected during validation.

Groundwater Volatile Organic Results
For Wells at Rockwell (Rocky Flats)

ALLUVIAL WELLS DOWNGRADIENT OF THE 881 HILLSIDE

Well Number	Date Sampled	Qtr.	Tetra chloro ethene ug/l	1,1,2,2- Tetrachloro ethane ug/l	Toluene ug/l	Chloro benzene ug/l	Ethyl benzene ug/l	Styrene ug/l	Total Xylenes ug/l
69-86	05/26/87	2	4 U	NR	NR	NR	NR	NR	NR
69-86	07/06/87	3	4 U	NR	NR	NR	NR	NR	NR
69-86	10/07/87	4	5 U	NR	NR	NR	NR	NR	NR
69-86	10/08/87		INSUFFICIENT SAMPLE FOR VOLATILE ORGANIC ANALYSIS						
69-86	02/10/88	1	5 U	5 U	5 U	5 U	5 U	5 U	5 U
69-86	04/11/88	2	5 U	5 U	5 U	5 U	5 U	5 U	5 U
69-86	07/18/88	3	5 U	5 U	5 U	5 U	5 U	5 U	5 U
69-86	10/20/88	4	5 U	5 U	5 U	5 U	5 U	5 U	5 U
69-86	01/12/89	1	5 U	5 U	5 U	NR	5 U	5 U	5 U
69-86	04/17/89	2	5 U	5 U	5 U	NR	5 U	5 U	5 U
69-86	05/26/89		5 U	5 U	5 U	NR	5 U	5 U	5 U
69-86	08/11/89		Data not yet received						
02-87	05/29/87	2	INSUFFICIENT SAMPLE FOR VOLATILE ORGANIC ANALYSIS						
02-87	06/24/87	2	5U	5U	5U	5U	5U	5U	5U
02-87	07/09/87	3	4 U	NR	NR	NR	NR	NR	NR
02-87	10/07/87	4	5 U	NR	NR	NR	NR	NR	NR
02-87	10/08/87	4	INSUFFICIENT SAMPLE FOR VOLATILE ORGANIC ANALYSIS						
02-87	02/10/88	1	5 U	5 U	5 U	5 U	5 U	10 U	10 U

NR = analyte not reported
J = Present below detection limit
U = Analyzed but not detected
B = Present in laboratory blank
* = Holding time not met
N = Batch spike not in 80-120% range
E = Estimated value
R = Data rejected during validation.

Groundwater Volatile Organic Results
For Wells at Rockwell (Rocky Flats)

ALLUVIAL WELLS DOWNGRADIENT OF THE 881 HILLSIDE

Well Number	Date Sampled	Qtr.	Chloro methane ug/l	Bromo methane ug/l	Vinyl Chloride ug/l	Chloro ethane ug/l	Methylene Chloride ug/l	Acetone ug/l	Carbon Disulfide ug/l
02-87	04/07/88	2	10 U	10 U	10 U	10 U	23	10 U	5 U
02-87	07/13/88	3	10 U	10 U	10 U	10 U	5 U	10 U	5 U
02-87	10/20/88	4	INSUFFICIENT SAMPLE FOR VOLATILE ORGANIC ANALYSIS						
02-87	11/14/88	4	10 U	10 U	10 U	10 U	4 JB	10 U	5 U
02-87	01/12/89	1	10U R	10U R	10U R	10U R	5 U	10 U	5 U
02-87	04/17/89	2	10 U	10 U	10 U	10 U	5 U	10 U	5 U
02-87	05/26/89		INSUFFICIENT SAMPLE FOR VOLATILE ORGANIC ANALYSIS						
02-87	05/30/89		10 U	10 U	10 U	10 U	17 B	2 J	5 U
02-87	07/25/89		Data not yet received						
47-87	11/30/87	4	10 U	10 U	10 U	10 U	5 U	10 U	5 U
47-87	11/30/87	4	10 U	10 U	10 U	10 U	8 B	5 J	5 U
47-87	02/15/88	1	DRY						
47-87	04/13/88	2	DRY						
47-87	07/18/88	3	DRY						
47-87	10/21/88	4	DRY						
47-87	06/10/89		Data not yet received						

NR = analyte not reported
J = Present below detection limit
U = Analyzed but not detected
B = Present in laboratory blank
* = Holding time not met
N = Batch spike not in 80-120% range
E = Estimated value
R = Data rejected during validation.

Groundwater Volatile Organic Results
For Wells at Rockwell (Rocky Flats)

ALLUVIAL WELLS DOWNGRADIENT OF THE 881 HILLSIDE

Well Number	Date Sampled	Qtr.	1,1,-Di-chloro ethene ug/l	1,1-Di-chloro ethane ug/l	Trans-1,2-Dichloro ethene ug/l	Chloroform ug/l	1,2-Di-chloro ethane ug/l	2-Butanone ug/l	1,1,1-Tri chloro ethane ug/l
02-87	04/07/88	2	5 U	5 U	NR	5 U	5 U	10 U	5 U
02-87	07/13/88	3	5 U	5 U	NR	5 U	5 U	10 U	5 U
02-87	10/20/88	4	INSUFFICIENT SAMPLE FOR VOLATILE ORGANIC ANALYSIS						
02-87	11/14/88	4	5 U	5 U	NR	2 JB	5 U	10 U	5 U
02-87	01/12/89	1	5 U	5 U	NR	5 U	5 U	10 U R	5 U
02-87	04/17/89	2	5 U	5 U	NR	5 U	5 U	10 U	5 U
02-87	05/26/89		INSUFFICIENT SAMPLE FOR VOLATILE ORGANIC ANALYSIS						
02-87	05/30/89		5 U	5 U	NR	5 U	5 U	10 U	5 U
02-87	07/25/89		Data not yet received						
47-87	11/30/87	4	5 U	5 U	NR	5 U	5 U	10 U	5 U
47-87	11/30/87	4	5 U	5 U	5 U	1 J	5 U	10 U	5 U
47-87	02/15/88	1	DRY						
47-87	04/13/88	2	DRY						
47-87	07/18/88	3	DRY						
47-87	10/21/88	4	DRY						
47-87	06/10/89		Data not yet received						

NR = analyte not reported
J = Present below detection limit
U = Analyzed but not detected
B = Present in laboratory blank
* = Holding time not met
N = Batch spike not in 80-120% range
E = Estimated value
R = Data rejected during validation.

Groundwater Volatile Organic Results
For Wells at Rockwell (Rocky Flats)

ALLUVIAL WELLS DOWNGRADIENT OF THE 881 HILLSIDE

Well Number	Date Sampled	Qtr.	Carbon Tetra chloride ug/l	Vinyl Acetate ug/l	Bromo dichloro methane ug/l	1,2-Di-chloro propane ug/l	Cis,1,3-Dichloro propene ug/l	Trichloro ethene ug/l	Dibromo chloro methane ug/l
02-87	04/07/88	2	5 U	10 U	5 U	5 U	5 U	5 U	5 U
02-87	07/13/88	3	5 U	10 U	5 U	5 U	5 U	5 U	5 U
02-87	10/20/88	4	INSUFFICIENT SAMPLE FOR VOLATILE ORGANIC ANALYSIS						
02-87	11/14/88	4	5 U	10 U	5 U	5 U	5 U	5 U	5 U
02-87	01/12/89	1	5 U	10 U	5 U	5 U	5 U	2 J	5 U
02-87	04/17/89	2	5 U	10 U R	5 U	5 U	5 U	5 U	5 U
02-87	05/26/89		INSUFFICIENT SAMPLE FOR VOLATILE ORGANIC ANALYSIS						
02-87	05/30/89		5 U	10 U	5 U	5 U	5 U	5 U	5 U
02-87	07/25/89		Data not yet received						
47-87	11/30/87	4	5 U	10 U	5 U	5 U	5 U	5 U	5 U
47-87	11/30/87	4	5 U	10 U	5 U	5 U	5 U	5 U	5 U
47-87	02/15/88	1	DRY						
47-87	04/13/88	2	DRY						
47-87	07/18/88	3	DRY						
47-87	10/21/88	4	DRY						
47-87	06/10/89		Data not yet received						

NR = analyte not reported
J = Present below detection limit
U = Analyzed but not detected
B = Present in laboratory blank
* = Holding time not met
N = Batch spike not in 80-120% range
E = Estimated value
R = Data rejected during validation.

Groundwater Volatile Organic Results

For Wells at Rockwell (Rocky Flats)

ALLUVIAL WELLS DOWNGRADIENT OF THE 881 HILLSIDE

Well Number	Date Sampled	Qtr.	1,1,2-Tri chloro ethane ug/l	Benzene ug/l	Trans-1,3- Dichloro propene ug/l	2-Chloro ethylvinyl ether ug/l	Bromoform ug/l	4-Methyl- 2-penta none ug/l	2-Hexanone ug/l
02-87	04/07/88	2	5 U	5 U	5 U	10 U	5 U	10 U	10 U
02-87	07/13/88	3	5 U	5 U	5 U	10 U	5 U	10 U	10 U
02-87	10/20/88	4	INSUFFICIENT SAMPLE FOR VOLATILE ORGANIC ANALYSIS						
02-87	11/14/88	4	5 U	5 U	5 U	10 U	5 U	10 U	10 U
02-87	01/12/89	1	5 U	5 U	5 U	NR	5 U	10 U	10 U
02-87	04/17/89	2	5 U	5 U	5 U	NR	5 U	10 U	10 U
02-87	05/26/89		INSUFFICIENT SAMPLE FOR VOLATILE ORGANIC ANALYSIS						
02-87	05/30/89		5 U	5 U	5 U	NR	5 U	10 U	10 U
02-87	07/25/89		Data not yet received						
47-87	11/30/87	4	5 U	5 U	5 U	NR	5 U	10 U	10 U
47-87	11/30/87	4	5 U	5 U	5 U	10 U	5 U	10 U	10 U
47-87	02/15/88	1	DRY						
47-87	04/13/88	2	DRY						
47-87	07/18/88	3	DRY						
47-87	10/21/88	4	DRY						
47-87	06/10/89		Data not yet received						

NR = analyte not reported
J = Present below detection limit
U = Analyzed but not detected
B = Present in laboratory blank
* = Holding time not met
N = Batch spike not in 80-120% range
E = Estimated value
R = Data rejected during validation.

Groundwater Volatile Organic Results
For Wells at Rockwell (Rocky Flats)

ALLUVIAL WELLS DOWNGRADIENT OF THE 881 HILLSIDE

Well Number	Date Sampled	Qtr.	Tetra chloro ethene ug/l	1,1,2,2- Tetrachloro ethane ug/l	Toluene ug/l	Chloro benzene ug/l	Ethyl benzene ug/l	Styrene ug/l	Total Xylenes ug/l
02-87	04/07/88	2	5 U	5 U	5 U	5 U	5 U	5 U	5 U
02-87	07/13/88	3	5 U	5 U	5 U	5 U	5 U	5 U	5 U
02-87	10/20/88	4	INSUFFICIENT SAMPLE FOR VOLATILE ORGANIC ANALYSIS						
02-87	11/14/88	4	5 U	5 U	3 JB	5 U	5 U	5 U	5 U
02-87	01/12/89	1	35 J	5 U	5 U	5 U	5 U	5 U	5 U
02-87	04/17/89	2	5 U	5 U	5 U	5 U	5 U	5 U	5 U
02-87	05/26/89		INSUFFICIENT SAMPLE FOR VOLATILE ORGANIC ANALYSIS						
02-87	05/30/89		5 U	5 U	5 U	5 U	5 U	5 U	5 U
02-87	07/25/89		Data not yet received						
47-87	11/30/87	4	5 U	5 U	5 U	5 U	5 U	5 U	5 U
47-87	11/30/87	4	5 U	5 U	5 U	5 U	5 U	5 U	5 U
47-87	02/15/88	1	DRY						
47-87	04/13/88	2	DRY						
47-87	07/18/88	3	DRY						
47-87	10/21/88	4	DRY						
47-87	06/10/89		Data not yet received						

NR = analyte not reported
J = Present below detection limit
U = Analyzed but not detected
B = Present in laboratory blank
* = Holding time not met
N = Batch spike not in 80-120% range
E = Estimated value
R = Data rejected during validation.

Groundwater Volatile Organic Results
For Wells at Rockwell (Rocky Flats)

ALLUVIAL WELLS DOWNGRADIENT OF THE 881 HILLSIDE

Well Number	Date Sampled	Qtr.	Chloro methane ug/l	Bromo methane ug/l	Vinyl Chloride ug/l	Chloro ethane ug/l	Methylene Chloride ug/l	Acetone ug/l	Carbon Disulfide ug/l
48-87	11/18/87	4	10 U	10 U	10 U	10 U	5 U	10 U	5 U
48-87	11/18/87	4	10 U	10 U	10 U	10 U	2 JB	4 JB	5 U
48-87	02/15/88	1	10 U						
48-87	04/13/88	2	10 U	10 U	10 U	10 U	5 U	10 U	5 U
48-87	07/18/88	3	DRY	10 U	10 U	10 U	5 U	12	5 U
48-87	10/21/88	4	DRY						
48-87	06/09/89		Data not yet received						
48-87	07/25/89		Data not yet received						
55-87	11/30/87	4	10 U	10 U	10 U	10 U	5 U	10 U	5 U
55-87	11/30/87	4	10 U	10 U	10 U	10 U	8 B	10 U	5 U
55-87	02/15/88	1	DRY						
55-87	04/11/88	2	DRY						
55-87	07/13/88	3	DRY						
55-87	10/21/88	4	DRY						
55-87	06/02/89		10 U	10 U	10 U	10 U	5 U	19	1 J
55-87	07/10/89		Data not yet received						

NR = analyte not reported
J = Present below detection limit
U = Analyzed but not detected
B = Present in laboratory blank
* = Holding time not met
N = Batch spike not in 80-120% range
E = Estimated value
R = Data rejected during validation.

Groundwater Volatile Organic Results
For Wells at Rockwell (Rocky Flats)

ALLUVIAL WELLS DOWNGRADIENT OF THE 881 HILLSIDE

Well Number	Date Sampled	Qtr.	1,1,-Di chloro ethene ug/l	1,1-Di-chloro ethane ug/l	Trans-1,2-Dichloro ethene ug/l	Chloroform ug/l	1,2-Di-chloro ethane ug/l	2-Butanone ug/l	1,1,1-Tri chloro ethane ug/l
48-87	11/18/87	4	5 U	5 U	NR	5 U	5 U	10 U	5 U
48-87	11/18/87	4	5 U	5 U	5 U	5 U	5 U	10 U	5 U
48-87	02/15/88	1	5 U	10 U	5 U	5 U	5 U	5 U	5 U
48-87	04/13/88	2	5 U	5 U	NR	5 U	5 U	10 U	5 U
48-87	07/18/88	3	DRY						
48-87	10/21/88	4	DRY						
48-87	06/09/89		Data not yet received						
48-87	07/25/89		Data not yet received						
55-87	11/30/87	4	5 U	5 U	NR	5 U	5 U	10 U	5 U
55-87	11/30/87	4	5 U	5 U	5 U	5 U	5 U	10 U	5 U
55-87	02/15/88	1	DRY						
55-87	04/11/88	2	DRY						
55-87	07/13/88	3	DRY						
55-87	10/21/88	4	DRY						
55-87	06/02/89		5 U	5 U	NR	5 U	5 U	10 U	5 U
55-87	07/10/89		Data not yet received						

NR = analyte not reported
J = Present below detection limit
U = Analyzed but not detected
B = Present in laboratory blank
* = Holding time not met
N = Batch spike not in 80-120% range
E = Estimated value
R = Data rejected during validation.

Groundwater Volatile Organic Results
For Wells at Rockwell (Rocky Flats)

ALLUVIAL WELLS DOWNGRADIENT OF THE 881 HILLSIDE

Well Number	Date Sampled	Qtr.	Carbon Tetra chloride ug/l	Vinyl Acetate ug/l	Bromo dichloro methane ug/l	1,2-Di-chloro propane ug/l	Cis,1,3-Dichloro propene ug/l	Trichloro ethene ug/l	Dibromo chloro methane ug/l
48-87	11/18/87	4	5 U	10 U	5 U	5 U	5 U	5 U	5 U
48-87	11/18/87	4	5 U	10 U	5 U	5 U	5 U	5 U	5 U
48-87	02/15/88	1	5 U	5 U	NR	5 U	5 U	10 U	5 U
48-87	04/13/88	2	5 U	10 U	5 U	5 U	5 U	5 U	5 U
48-87	07/18/88	3	DRY						
48-87	10/21/88	4	DRY						
48-87	06/09/89		Data not yet received						
48-87	07/25/89		Data not yet received						
55-87	11/30/87	4	5 U	10 U	5 U	5 U	5 U	5 U	5 U
55-87	11/30/87	4	5 U	10 U	5 U	5 U	5 U	5 U	5 U
55-87	02/15/88	1	DRY						
55-87	04/11/88	2	DRY						
55-87	07/13/88	3	DRY						
55-87	10/21/88	4	DRY						
55-87	06/02/89		5 U	10 U	5 U	5 U	5 U	5 U	5 U
55-87	07/10/89		Data not yet received						

NR = analyte not reported
J = Present below detection limit
U = Analyzed but not detected
B = Present in laboratory blank
* = Holding time not met
N = Batch spike not in 80-120% range
E = Estimated value
R = Data rejected during validation.

Groundwater Volatile Organic Results
For Wells at Rockwell (Rocky Flats)

ALLUVIAL WELLS DOWNGRADIENT OF THE 881 HILLSIDE

Well Number	Date Sampled	Qtr.	1,1,2-Tri chloro ethane ug/l	Benzene ug/l	Trans-1,3- Dichloro propene ug/l	2-Chloro ethylvinyl ether ug/l	Bromoform ug/l	4-Methyl- 2-penta none ug/l	2-Hexanone ug/l
48-87	11/18/87	4	5 U	5 U	5 U	NR	5 U	10 U	10 U
48-87	11/18/87	4	5 U	5 U	5 U	10 U	5 U	10 U	10 U
48-87	02/15/88	1	5 U	5 U	5 U	10 U	5 U	10 U	10 U
48-87	04/13/88	2	5 U	5 U	5 U	10 U	5 U	10 U	10 U
48-87	07/18/88	3	DRY						
48-87	10/21/88	4	DRY						
48-87	06/09/89		Data not yet received						
48-87	07/25/89		Data not yet received						
55-87	11/30/87	4	5 U	5 U	5 U	NR	5 U	10 U	10 U
55-87	11/30/87	4	5 U	5 U	5 U	10 U	5 U	10 U	10 U
55-87	02/15/88	1	DRY						
55-87	04/11/88	2	DRY						
55-87	07/13/88	3	DRY						
55-87	10/21/88	4	DRY						
55-87	06/02/89		5 U	5 U	5U	NR	5 U	10 U	10 U
55-87	07/10/89		Data not yet received						

NR = analyte not reported
J = Present below detection limit
U = Analyzed but not detected
B = Present in laboratory blank
* = Holding time not met
N = Batch spike not in 80-120% range
E = Estimated value
R = Data rejected during validation.

Groundwater Volatile Organic Results
For Wells at Rockwell (Rocky Flats)

ALLUVIAL WELLS DOWNGRADIENT OF THE 881 HILLSIDE

Well Number	Date Sampled	Qtr.	Tetra chloro ethene ug/l	1,1,2,2-Tetrachloro ethane ug/l	Toluene ug/l	Chloro benzene ug/l	Ethyl benzene ug/l	Styrene ug/l	Total Xylenes ug/l
48-87	11/18/87	4	5 U	5 U	5 U	5 U	5 U	5 U	5 U
48-87	11/18/87	4	5 U	5 U	5 U	5 U	5 U	5 U	5 U
48-87	02/15/88	4	5 U	5 U	5 U	5 U	5 U	5 U	5U
48-87	04/13/88	4	5 U	5 U	5 U	5 U	5 U	5 U	5 U
48-87	07/18/88	1	DRY						
48-87	10/21/88	2	DRY						
48-87	06/09/89		Data not yet received						
48-87	07/25/89		Data not yet received						
55-87	11/30/87	4	5 U	5 U	5 U	5 U	5 U	5 U	5 U
55-87	11/30/87	4	5 U	5 U	5 U	5 U	5 U	5 U	5 U
55-87	02/15/88	1	DRY						
55-87	04/11/88	2	DRY						
55-87	07/13/88	3	DRY						
55-87	10/21/88	4	DRY						
55-87	06/02/89		5 U	5 U	5 U	5 U	5 U	5 U	5 U
55-87	07/10/89		Data not yet received						

NR = analyte not reported
J = Present below detection limit
U = Analyzed but not detected
B = Present in laboratory blank
* = Holding time not met
N = Batch spike not in 80-120% range
E = Estimated value
R = Data rejected during validation.

Groundwater Dissolved Metals Results
For Wells at Rockwell (Rocky Flats)

ALLUVIAL WELLS DOWNGRADIENT OF THE 881 HILLSIDE

Well Number	Date Sampled	Qtr.	Magnesium (Mg), diss. mg/l	Manganese (Mn), diss. mg/l	Mercury (Hg), diss. mg/l	Molybdenum (Mo), diss. mg/l	Nickel (Ni), diss. mg/l	Potassium (K), diss. mg/l	Selenium (Se), diss. mg/l
66-86	05/11/87	1	7.6188	0.1277	0.0002 U	0.0220 U	0.0983	5.0 U	0.005 U
66-86	05/28/87	2	9.5567	0.1474	0.0002 U	0.0220 U	0.0370 U	5.0 U	0.005 U
66-86	07/17/87	3	DRY						
66-86	10/19/87	4	DRY						
66-86	03/31/88	1	6.7024	0.0167	0.0002 U	0.0220 U	0.0415	1.0	0.005 U
66-86	06/02/88	2	5.4617	0.0092	0.0002 U	0.0220 U	0.0370 U	1.7	0.005 U
66-86	10/07/88		DRY						
66-86	12/23/88		DRY						
69-86	04/29/87	1	41.1264	0.0274	0.0002 U	0.0220 U	0.0370 U	5.0 U	0.24
69-86	05/26/87	2	39.8560	0.0051 U	0.0002 U	0.0220 U	0.0370 U	5.0 U	0.20
69-86	07/06/87	3	34.4513	0.0051 U	0.0002 U	0.0220 U	0.0370 U	0.8	0.02
69-86	10/07/87	4	30.8814	0.0222	0.0005	0.0220 U	0.0370 U	1.1	0.1
69-86	10/08/87		INSUFFICIENT SAMPLE FOR METALS ANALYSIS						
69-86	02/10/88	1	44.1781	0.0051 U	0.0002 U	0.0220 U	0.0370 U	0.7	0.082
69-86	04/11/88	2	41.2807	0.0051 U	0.0002 U	0.0220 U	0.0394	0.8	0.17
69-86	07/18/88	3	34.5960	0.0078	0.0002* U	0.0220 U	0.0370 U	0.8	0.180
69-86	10/20/88	4	36.8031	0.0074	0.0002 U	0.0220 U	0.0370 U	2.0	0.077

NR = analyte not reported
J = Present below detection limit
U = Analyzed but not detected
B = Present in laboratory blank
* = Holding time not met
N = Batch spike not in 80-120% range
E = Estimated value
R = Data rejected during validation.

Groundwater Dissolved Metals Results

For Wells at Rockwell (Rocky Flats)

ALLUVIAL WELLS DOWNGRADIENT OF THE 881 HILLSIDE

Well Number	Date Sampled	Qtr.	Cesium (Cs), diss. mg/l	Chromium (Cr), diss. mg/l	Cobalt (Co), diss. mg/l	Copper (Cu), diss. mg/l	Iron (Fe), diss. mg/l	Lead (Pb), diss. mg/l	Lithium (Li), diss. mg/l
66-86	05/11/87	1	0.2 U	0.0100 U	0.0220 U	0.0063 U	0.0193	0.0050 U	NR
66-86	05/28/87	2	0.2 U	0.0100 U	0.0220 U	0.0063 U	0.0125	0.018	NR
66-86	07/17/87	3	DRY						
66-86	10/19/87	4	DRY						
66-86	03/31/88	1	0.020 U	0.0100 U	0.0220 U	0.0072	0.0336	0.005 U	0.1 U
66-86	06/02/88	2	0.02 U	0.0100 U	0.0220 U	0.0063 U	0.1015	0.005 U	NR
66-86	10/07/88		DRY						
66-86	12/23/88		DRY						
69-86	04/29/87	1	0.2 U	0.0100 U	0.0220 U	0.0063 U	0.0069 U	0.0050 U	NR
69-86	05/26/87	2	0.2 U	0.0100 U	0.0220 U	0.0063 U	0.0069 U	0.008	NR
69-86	07/06/87	3	0.02 U	0.0100 U	0.0220 U	0.0103	0.0128	0.005 U	NR
69-86	10/07/87	4	0.02 U	0.0234	0.0220 U	0.0133	0.0809	0.005 U	0.04 J
69-86	10/08/87		INSUFFICIENT SAMPLE FOR METALS ANALYSIS						
69-86	02/10/88	1	0.02 U	0.0110	0.0220 U	0.0063 U	0.0615	0.005 U	0.1 U
69-86	04/11/88	2	0.02 U	0.0100 U	0.0220 U	0.0063 U	0.0069 U	0.005 U	0.1 U
69-86	07/18/88	3	0.020 U	0.0100 U	0.0220 U	0.0063 U	0.0300	0.005 U	NR
69-86	10/20/88	4	0.02 U	0.0100 U	0.0220 U	0.0248	0.0483	0.005 U	NR

NR = analyte not reported
J = Present below detection limit
U = Analyzed but not detected
B = Present in laboratory blank
* = Holding time not met
N = Batch spike not in 80-120% range
E = Estimated value
R = Data rejected during validation.

Groundwater Dissolved Metals Results
For Wells at Rockwell (Rocky Flats)

ALLUVIAL WELLS DOWNGRADIENT OF THE 881 HILLSIDE

Well Number	Date Sampled	Qtr.	Aluminum (Al), diss. mg/l	Antimony (Sb), diss. mg/l	Arsenic (As), diss. mg/l	Barium (Ba), diss. mg/l	Beryllium (Be), diss. mg/l	Cadmium (Cd), diss. mg/l	Calcium (Ca), diss. mg/l
66-86	05/11/87	1	0.0411	0.06 U	0.0100 U	0.0726	0.005 U	0.0050 U	33.8505
66-86	05/28/87	2	0.0290 U	0.06 U	0.01 U	0.1065	0.005 U	0.005 U	49.7015
66-86	07/17/87	3	DRY						
66-86	10/19/87	4	DRY						
66-86	03/31/88	1	0.0305	0.0340 U	0.005 U	0.0473	0.0010 U	0.0050 U	29.8451
66-86	06/02/88	2	0.0533	0.0340 U	0.005 U	0.0792	0.0010 U	0.0050 U	24.1847
66-86	10/07/88		DRY						
66-86	12/23/88		DRY						
69-86	04/29/87	1	0.0290 U	0.06 U	0.0100 U	0.1023	0.005 U	0.0050 U	148.0271
69-86	05/26/87	2	0.0290 U	0.06 U	0.01 U	0.1056	0.005 U	0.005 U	154.8550
69-86	07/06/87	3	0.0359	0.02 U	0.005 U	0.1215	0.005 U	0.001 U	138.0943
69-86	10/07/87	4	0.0700	0.02 U	0.005 U	0.1132	0.005 U	0.0005 J	113.3098
69-86	10/08/87		INSUFFICIENT SAMPLE FOR METALS ANALYSIS						
69-86	02/10/88	1	0.1216	0.0340 U	0.002 J	0.1318	0.001 J	0.0016	147.3161
69-86	04/11/88	2	0.0290 U	0.0340 U	0.005 U	0.1074	0.0010 U	0.0050 U	134.6656
69-86	07/18/88	3	0.0371	0.0618	0.005 U	0.1063	0.0018	0.0050 U	136.7702
69-86	10/20/88	4	0.0535	0.0602	0.005 U	0.1307	0.0010 U	0.0050 U	137.9526

NR = analyte not reported
J = Present below detection limit
U = Analyzed but not detected
B = Present in laboratory blank
* = Holding time not met
N = Batch spike not in 80-120% range
E = Estimated value
R = Data rejected during validation.

Groundwater Dissolved Metals Results
For Wells at Rockwell (Rocky Flats)

ALLUVIAL WELLS DOWNGRADIENT OF THE 881 HILLSIDE

Well Number	Date Sampled	Qtr.	Silver (Ag), diss. mg/l	Sodium (Na), diss. mg/l	Tin (Sn), diss. mg/l	Strontium (Sr), diss. mg/l	Thallium (Tl), diss. mg/l	Vanadium (V), diss. mg/l	Zinc (Zn), diss. mg/l
64-86	04/29/87	1	0.0076 U	88.4763	NR	0.4237	0.0100 U	0.0240 U	0.02
64-86	05/28/87	2	INSUFFICIENT SAMPLE FOR METALS ANALYSIS						
64-86	07/16/87	3	0.0076 U	167.2014	NR	0.6982	0.01 U	0.0368 U	0.0218
64-86	10/12/87	4	DRY						
64-86	02/17/88	1	0.0076 U	105.6913	NR	0.5420	0.01 U	0.0240 U	0.0200 U
64-86	04/11/88	2	0.0076 U	95.3058	NR	0.4397	0.01 U	0.0360 U	0.0200 U
64-86	07/13/88	3	DRY						
64-86	10/21/88	4	DRY						
65-86	05/13/87	1	0.0076 U	74.5395	NR	0.5659	0.0100 U	0.0240 U	0.02 U
65-86	05/28/87	2	0.0076 U	72.2864	NR	0.5725	0.01 U	0.0240 U	0.0271
65-86	07/16/87	3	INSUFFICIENT SAMPLE FOR METALS ANALYSIS						
65-86	09/09/87	3	0.0076 U	75.5453	NR	0.7864	0.01 U	0.0240 U	0.0990
65-86	10/19/87	4	DRY						
65-86	02/29/88	1	0.0076 U	67.5564	NR	0.6006	0.01 U	0.0240 U	0.0373
65-86	04/18/88	2	0.0076 U	55.3275	NR	0.4262	0.01 U	0.0360 U	0.1039
65-86	07/19/88	3	DRY						
65-86	10/21/88	4	DRY						

NR = analyte not reported
J = Present below detection limit
U = Analyzed but not detected
B = Present in laboratory blank
* = Holding time not met
N = Batch spike not in 80-120% range
E = Estimated value
R = Data rejected during validation.

Groundwater Dissolved Metals Results
For Wells at Rockwell (Rocky Flats)

ALLUVIAL WELLS DOWNGRADIENT OF THE 881 HILLSIDE

Well Number	Date Sampled	Qtr.	Magnesium (Mg), diss. mg/l	Manganese (Mn), diss. mg/l	Mercury (Hg), diss. mg/l	Molybdenum (Mo), diss. mg/l	Nickel (Ni), diss. mg/l	Potassium (K), diss. mg/l	Selenium (Se), diss. mg/l
64-86	04/29/87	1	16.1115	0.2782	0.0002 U	0.0220 U	0.4380	5.0 U	0.005 U
64-86	05/28/87	2	INSUFFICIENT SAMPLE FOR METALS ANALYSIS						
64-86	07/16/87	3	23.3312	0.1053	0.006	0.0220 U	0.0370 U	2.4	0.002 J
64-86	10/12/87	4	DRY						
64-86	02/17/88	1	19.9044	0.0587	0.0002 U	0.0234	0.0492	1.6	0.004 J
64-86	04/11/88	2	16.6025	0.0331	0.0002 U	0.0271	0.0370 U	1.3	0.009
64-86	07/13/88	3	DRY						
64-86	10/21/88	4	DRY						
65-86	05/13/87	1	20.9975	0.0145	0.0002 U	0.0220 U	0.0370 U	5.0 U	0.005 U
65-86	05/28/87	2	20.0700	0.0092	0.0002 U	0.0220 U	0.0370 U	5.0 U	0.005 U
65-86	07/16/87	3	INSUFFICIENT SAMPLE FOR METALS ANALYSIS						
65-86	09/09/87	3	26.1863	0.1589	0.0002 U	0.0220 U	0.0534	2.7	0.005 U
65-86	10/19/87	4	DRY						
65-86	02/29/88	1	21.9367	0.0060	0.0002 U	0.0220 U	0.0370 U	1.3	0.005 U
65-86	04/18/88	2	16.6175	0.0051 U	0.0002 U	0.0220 U	0.0370 U	1.0	0.005 U
65-86	07/19/88	3	DRY						
65-86	10/21/88	4	DRY						

NR = Analyte not reported
J = Present below detection limit
U = Analyzed but not detected
B = Present in laboratory blank
* = Holding time not met
N = Batch spike not in 80-120% range
E = Estimated value

Groundwater Dissolved Metals Results

For Wells at Rockwell (Rocky Flats)

ALLUVIAL WELLS DOWNGRADIENT OF THE 881 HILLSIDE

Well Number	Date Sampled	Qtr.	Cesium (Cs), diss. mg/l	Chromium (Cr), diss. mg/l	Cobalt (Co), diss. mg/l	Copper (Cu), diss. mg/L	Iron (Fe), diss. mg/l	Lead (Pb), diss. mg/l	Lithium (Li), diss. mg/l
64-86	04/29/87	1	0.2 U	0.0100 U	0.0220 U	0.0063 U	0.0069 U	0.0050 U	NR
64-86	05/28/87	2	INSUFFICIENT SAMPLE FOR METALS ANALYSIS						
64-86	07/16/87	3	0.02 U	0.0100 U	0.0220 U	0.0341	0.0069 U	0.005 U	NR
64-86	10/12/87	4	DRY						
64-86	02/17/88	1	0.02 U	0.0100 U	0.0220 U	0.0097	0.0069 U	0.005 U	0.05 J
64-86	04/11/88	2	0.02 U	0.0100 U	0.0220 U	0.0078	0.0274	0.005 U	0.1 U
64-86	07/13/88	3	DRY						
64-86	10/21/88	4	DRY						
65-86	05/13/87	1	0.2 U	0.0100 U	0.0220 U	0.0063 U	0.0154	0.0050 U	NR
65-86	05/28/87	2	0.2 U	0.0100 U	0.0220 U	0.0063 U	0.0086	0.024	NR
65-86	07/16/87	3	INSUFFICIENT SAMPLE FOR METALS ANALYSIS						
65-86	09/09/87	3	0.02 U	0.0100 U	0.0220 U	0.0202	0.4065	0.001 J	NR
65-86	10/19/87	4	DRY						
65-86	02/29/88	1	0.02 U	0.0100 U	0.0220 U	0.0063 U	0.0387	0.005 U	0.1 U
65-86	04/18/88	2	0.02 U	0.0100 U	0.0220 U	0.0102 U	0.0491	0.005 U	0.1 U
65-86	0719/88	3	DRY						
65-86	10/21/88	4	DRY						

NR = Analyte not reported
J = Present below detection limit
U = Analyzed but not detected
B = Present in laboratory blank
* = Holding time not met
N = Batch spike not in 80-120% range
E = Estimated value

Groundwater Dissolved Metals Results

For Wells at Rockwell (Rocky Flats)

ALLUVIAL WELLS DOWNGRADIENT OF THE 881 HILLSIDE

Well Number	Date Sampled	Qtr.	Aluminum (Al), diss. mg/l	Antimony (Sb), diss. mg/l	Arsenic (As), diss. mg/l	Barium (Ba), diss. mg/l	Beryllium (Be), diss. mg/l	Cadmium (Cd), diss. mg/l	Calcium (Ca), diss. mg/l
64-86	04/29/87	1	0.0290 U	0.06 U	0.0100 U	0.1111	0.005 U	0.0050 U	52.1962
64-86	05/28/87	2	INSUFFICIENT SAMPLE FOR METALS ANALYSIS						
64-86	07/16/87	3	0.0430	0.02 U	0.005 U	0.0774	0.005 U	0.0003 J	76.4896
64-86	10/12/87	4	DRY						
64-86	02/17/88	1	0.0290 U	0.02 U	0.005 U	0.0487	0.005 U	0.001 U	57.5364
64-86	04/11/88	2	0.0315	0.0340 U	0.005 U	0.0411	0.0010 U	0.0050 U	50.7763
64-86	07/13/88	3	DRY						
64-86	10/21/88	4	DRY						
65-86	05/13/87	1	0.0290 U	0.06 U	0.0100 U	0.0922	0.005 U	0.0050 U	85.8800
65-86	05/28/87	2	0.0290 U	0.06 U	0.01 U	0.1085	0.005 U	0.005 U	92.4841
65-86	07/16/87	3	INSUFFICIENT SAMPLE FOR METALS ANALYSIS						
65-86	09/09/87	3	0.2410	0.02 U	0.005 U	0.2399	0.005 U	0.001	99.8950
65-86	10/19/87	4	DRY						
65-86	02/29/88	1	0.0503	0.02 U	0.005 U	0.1020	0.005 U	0.001 U	80.8845
65-86	04/18/88	2	0.0332	0.0340 U	0.005 U	0.0470	0.0010 U	0.0050 U	62.1582
65-86	0719/88	3	DRY						
65-86	10/21/88	4	DRY						

NR = Analyte not reported
J = Present below detection limit
U = Analyzed but not detected
B = Present in laboratory blank
* = Holding time not met
N = Batch spike not in 80-120% range
E = Estimated value

ALLUVIAL DOWNGRADIENT OF THE 881 HILLSIDE

DISSOLVED METAL RESULTS

Groundwater Dissolved Radiochemistry Results

for Regulated Units at Rocky Flats Plants

ALLUVIAL WELLS DOWNGRADIENT OF THE 881 HILLSIDE

Well Number	Date Sampled	Qtr.	Cesium 137 PCI/L	(MDA)	Tritium PCI/L	(MDA)
48-87	04/13/88	2	****			
48-87	07/18/88	3	DRY			
48-87	10/21/88	4	DRY			
55-87	11/30/87	4	***			
55-87	11/30/87	4	***			
55-87	02/15/88	1	DRY			
55-87	04/11/88	2	DRY			
55-87	07/13/88	3	DRY			
55-87	10/21/88	4	DRY			

Notes: NR = Analyte not reported
*** = Insufficient Sample for Radiochemistry Analytes

Groundwater Dissolved Radiochemistry Results

for Regulated Units at Rocky Flats Plants

ALLUVIAL WELLS DOWNGRADIENT OF THE 881 HILLSIDE

Well Number	Date Sampled	Qtr.	Uranium 238 PCI/L	(MDA)	Strontium 89, 90 PCI/L	(MDA)	Plutonium 239, 240 PCI/L	(MDA)	Americium 241 PCI/L	(MDA)
48-87	04/13/88	2	****							
48-87	07/18/88	3	DRY							
48-87	10/21/88	4	DRY							
55-87	11/30/87	4	***							
55-87	11/30/87	4	***							
55-87	02/15/88	1	DRY							
55-87	04/11/88	2	DRY							
55-87	07/13/88	3	DRY							
55-87	10/21/88	4	DRY							

Notes: NR = Analyte not reported
*** = Insufficient Sample for Radiochemistry Analytes

Groundwater Dissolved Radiochemistry Results

for Regulated Units at Rocky Flats Plants

ALLUVIAL WELLS DOWNGRADIENT OF THE 881 HILLSIDE

Well Number	Date Sampled	Qtr.	Gross Alpha PCI/L	(MDA)	Gross Beta PCI/L	(MDA)	Uranium 233, 234 PCI/L	(MDA)	Uranium 235 PCI/L	(MDA)
48-87	04/13/88	2	****							
48-87	07/18/88	3	DRY							
48-87	10/21/88	4	DRY							
55-87	11/30/87	4	***							
55-87	11/30/87	4	***							
55-87	02/15/88	1	DRY							
55-87	04/11/88	2	DRY							
55-87	07/13/88	3	DRY							
55-87	10/21/88	4	DRY							

Notes: NR = Analyte not reported
*** = Insufficient Sample for Radiochemistry Analytes

Groundwater Dissolved Radiochemistry Results

for Regulated Units at Rocky Flats Plants

ALLUVIAL WELLS DOWNGRADIENT OF THE 881 HILLSIDE

Well Number	Date Sampled	Qtr.	Cesium 137 PCI/L	(MDA)	Tritium PCI/L	(MDA)
02-87	07/09/87	3	NR		<514	
02-87	10/07/87	4	NR		<500	
02-87	10/08/87	4	NR		NR	
02-87	02/10/88	1	NR		<220	
02-87	04/07/88	2	NR		<200	
02-87	07/13/88	3	NR		230	± 90
02-87	10/20/88	4	Data not yet received			
02-87	11/14/88	4	***			
47-87	11/30/87	4	***			
47-87	11/30/87	4	***			
47-87	02/15/88	1	DRY			
47-87	04/13/88	2	DRY			
47-87	07/18/88	3	DRY			
47-87	10/21/88	4	DRY			
48-87	11/18/87	4	***			
48-87	11/18/87	4	***			
48-87	02/15/88	1	NR		<210	

Notes: NR = Analyte not reported
*** = Insufficient Sample for Radiochemistry Analytes

Groundwater Dissolved Radiochemistry Results

for Regulated Units at Rocky Flats Plants

ALLUVIAL WELLS DOWNGRADIENT OF THE 881 HILLSIDE

Well Number	Date Sampled	Qtr.	Uranium 238 PCI/L	(MDA)	Strontium 89, 90 PCI/L	(MDA)	Plutonium 239, 240 PCI/L	(MDA)	Americium 241 PCI/L	(MDA)
02-87	07/09/87	3	3.7 ± 1.4		5.6		.42 ± .81	0.8	.04 ± .75	1.5
02-87	10/07/87	4	4.5 ± 0.5		NR		.04 ± .09		0.00 ± .20	
02-87	10/08/87	4	4.644 ± 0.634		NR		0.211 ± 0.074		0.032 ± 0.046	
02-87	02/10/88	1	3.5 ± 0.4		NR		0.13 ± 0.12		0.0 ± 3.3	
02-87	04/07/88	2	3.5 ± 0.3		NR		0.00 ± 0.04	0.16	0.00 ± 0.16	0.43
02-87	07/13/88	3	4.2 ± 0.5		NR		0.00 ± 0.04		0.00 ± 0.08	
02-87	10/20/88	4	Data not yet received							
02-87	11/14/88	4	***							
47-87	11/30/87	4	***							
47-87	11/30/87	4	***							
47-87	02/15/88	1	DRY							
47-87	04/13/88	2	DRY							
47-87	07/18/88	3	DRY							
47-87	10/21/88	4	DRY							
48-87	11/18/87	4	***							
48-87	11/18/87	4	***							
48-87	02/15/88	1	6.1 ± 1.2		NR		0.00 ± 0.18		0.00 ± 0.12	

Notes: NR = Analyte not reported
*** = Insufficient Sample for Radiochemistry Analytes

Groundwater Dissolved Radiochemistry Results

for Regulated Units at Rocky Flats Plants

ALLUVIAL WELLS DOWNGRADIENT OF THE 881 HILLSIDE

Well Number	Date Sampled	Qtr.	Gross Alpha PCI/L	(MDA)	Gross Beta PCI/L	(MDA)	Uranium 233, 234 PCI/L	(MDA)	Uranium 235 PCI/L	(MDA)
02-87	07/09/87	3	100 ± 70		254 ± 68		8.9 ± 2.4		0.3 ± 0.4	2.0
02-87	10/07/87	4	66 ± 42		96 ± 50		11.0 ± 1.0		.35 ± .11	
02-87	10/08/87	4	NR		NR		13.180 ± 1.750		NR	
02-87	02/10/88	1	19 ± 12		6 ± 23		7.4 ± 0.6		0.26 ± 0.09	
02-87	04/07/88	2	9 ± 17	31	5 ± 19	43	7.6 ± 0.6		0.08 ± 0.02	0.21
02-87	07/13/88	3	11 ± 3		6 ± 2		9.2 ± 0.9		0.13 ± 0.05	
02-87	10/20/88	4	Data not yet received							
02-87	11/14/88	4	***							
47-87	11/30/87	4	***							
47-87	11/30/87	4	***							
47-87	02/15/88	1	DRY							
47-87	04/13/88	2	DRY							
47-87	07/18/88	3	DRY							
47-87	10/21/88	4	DRY							
48-87	11/18/87	4	***				0			
48-87	11/18/87	4	***							
48-87	02/15/88	1	26 ± 8		12 ± 13		7.7 ± 1.5		0.16 ± 0.18	

Notes: NR = Analyte not reported
*** = Insufficient Sample for Radiochemistry Analytes

Groundwater Dissolved Radiochemistry Results

for Regulated Units at Rocky Flats Plants

ALLUVIAL WELLS DOWNGRADIENT OF THE 881 HILLSIDE

Well Number	Date Sampled	Qtr.	Uranium 238 PCI/L	(MDA)	Strontium 89, 90 PCI/L	(MDA)	Plutonium 239, 240 PCI/L	(MDA)	Americium 241 PCI/L	(MDA)
66-89	05/28/87	2	See total radiochemistry							
66-86	07/17/87	3	DRY							
66-86	10/19/87	4	DRY							
66-86	03/13/88	1	0.36 ± 0.13	0.37	NR		0.00 ± 0.16	0.57	0.00 ± 0.40	1.3
66-86	06/02/88	2	0.03 ± 0.23	0.83	NR		0.00 ± 0.04	0.11	0.00 ± 0.10	0.36
66-86	10/07/88		DRY							
66-86	12/23/88		DRY							
69-86	04/29/87	1	See total radiochemistry							
69-86	05/26/87	2	See total radiochemistry							
69-86	07/06/87	3	8.9 ± 1.6		3.8		-.02 ± .69	0.7	0.5 ± 2.5	3.7
69-86	10/07/88	4	6.5 ± 0.7		<1.0		0.00 ± .22	1.6	0.00 ± 0.5	.25
69-86	10/08/87		6.275 ± 0.761		NR		-0.042 ± 0.037		0.004 ± 0.040	
69-86	02/10/88	1	8.1 ± 2.2		NR		0.02 ± 0.21		0.00 ± 0.30	
69-86	04/11/88	2	8.0 ± 0.9		NR		NR		NR	
69-86	07/18/88	3	7.1 ± 0.7		NR		0.00 ± 0.06		0.00 ± 0.17	
69-86	10/20/88	4	Data not yet received							
02-87	05/29/87	2	See total radiochemistry							
02-87	06/24/87	2	***							

Notes: NR = Analyte not reported
*** = Insufficient Sample for Radiochemistry Analytes

Groundwater Dissolved Radiochemistry Results

for Regulated Units at Rocky Flats Plants

ALLUVIAL WELLS DOWNGRADIENT OF THE 881 HILLSIDE

Well Number	Date Sampled	Qtr.	Cesium 137 PCI/L	(MDA)	Tritium PCI/L	(MDA)
66-89	05/28/87	2	See total radiochemistry			
66-86	07/17/87	3	DRY			
66-86	10/19/87	4	DRY			
66-86	03/13/88	1	NR		<210	
66-86	06/02/88	2	NR		<210	
66-86	10/07/88		DRY			
66-86	12/23/88		DRY			
69-86	04/29/87	1	See total radiochemistry			
69-86	05/26/87	2	See total radiochemistry			
69-86	07/06/87	3	NR		<493	
69-86	10/07/87	4	NR		510 ± 290	
69-86	10/08/87		NR		NR	
69-86	02/10/88	1	NR		<210	
69-86	04/11/88	2	NR		<200	200
69-86	07/18/88	3	NR		200	
69-86	10/20/88	4	Data not yet received			
02-87	05/29/87	2	See total radiochemistry			
02-87	06/24/87	2	***			

Notes: NR = Analyte not reported
*** = Insufficient Sample for Radiochemistry Analytes

Groundwater Dissolved Radiochemistry Results

for Regulated Units at Rocky Flats Plants

ALLUVIAL WELLS DOWNGRADIENT OF THE 881 HILLSIDE

Well Number	Date Sampled	Qtr.	Gross Alpha PCI/L	(MDA)	Gross Beta PCI/L	(MDA)	Uranium 233, 234 PCI/L	(MDA)	Uranium 235 PCI/L	(MDA)
66-86	05/28/87	2	See total radiochemistry							
66-86	07/17/87	3	DRY							
66-86	10/19/87	4	DRY							
66-86	03/13/88	1	12 ± 5		3 ± 11	25	0.20 ± 0.16	0.43	0.03 ± 0.07	0.39
66-86	06/02/88	2	1 ± 4	9	6 ± 8	18	0.12 ± 0.24	0.86	0.00 ± 0.03	0.10
66-86	10/07/88		DRY							
66-86	12/23/88		DRY							
69-86	04/29/87	1	See total radiochemistry							
69-86	05/26/87	2	See total radiochemistry							
69-86	07/06/87	3	59 ± 40		78 ± 42		9.1 ± 1.9		0.8 ± 0.5	
69-86	10/07/88	4	53 ± 10		48 ± 10		8.4 ± 0.9		.35 ± .12	
69-86	10/08/87		NR		NR		8.707 ± 1.107		NR	
69-86	02/10/88	1	16 ± 8		7 ± 15		9.4 ± 2.5		0.65 ± 0.46	
69-86	04/11/88	2	14 ± 8		4 ± 11	25	11 ± 11		0.38 ± 0.07	
69-86	07/18/88	3	8 ± 3		9 ± 3		10 ± 1		0.19 ± 0.06	
69-86	10/20/88	4	Data not yet received							
02-87	05/29/87	2	See total radiochemistry							
02-87	06/24/87	2	***							

Notes: NR = Analyte not reported
*** = Insufficient Sample for Radiochemistry Analytes

Groundwater Dissolved Radiochemistry Results

for Regulated Units at Rocky Flats Plants

ALLUVIAL WELLS DOWNGRADIENT OF THE 881 HILLSIDE

Well Number	Date Sampled	Qtr.	Cesium 137 PCI/L	(MDA)	Tritium PCI/L	(MDA)
64-86	04/29/87	1	See total radiochemistry			
64-86	05/28/87	2	***			
64-86	07/16/87	3	***			
64-86	10/12/87	4	DRY			
64-86	02/17/88	1	NR		<220	
64-86	04/11/88	2	NR		<220	220
64-86	07/13/88	3	DRY			
64-86	10/21/88	4	DRY			
65-86	05/13/87	1	See total radiochemistry			
65-86	05/28/87	2	See total radiochemistry			
65-86	07/16/87	3	***			
65-86	09/09/87	3	NR		<509	
65-86	10/19/87	4	DRY			
65-86	02/29/88	1	NR		<210	
65-86	04/18/88	2	NR		<200	
65-86	07/19/88	3	DRY			
65-86	10/21/88	4	DRY			
66-86	05/11/87	1	See total radiochemistry			

Notes: NR = Analyte not reported
*** = Insufficient Sample for Radiochemistry Analytes

Groundwater Dissolved Radiochemistry Results

for Regulated Units at Rocky Flats Plants

ALLUVIAL WELLS DOWNGRADIENT OF THE 881 HILLSIDE

Well Number	Date Sampled	Qtr.	Uranium 238 PCI/L	(MDA)	Strontium 89, 90 PCI/L	(MDA)	Plutonium 239, 240 PCI/L	(MDA)	Americium 241 PCI/L	(MDA)
64-86	04/29/87	1	See total radiochemistry							
64-86	05/28/87	2	***							
64-86	07/16/87	3	***							
64-86	10/12/87	4	DRY							
64-86	02/17/88	1	1.2 ± 0.3		NR		0.00 ± 0.22		0.00 ± 0.13	
64-86	04/11/88	2	2.5 ± 0.4		NR		0.00 ± 0.05	0.19	NR	
64-86	07/13/88	3	DRY							
64-86	10/21/88	4	DRY							
65-86	05/13/87	1	See total radiochemistry							
65-86	05/28/87	2	See total radiochemistry							
65-86	07/16/87	3	***							
65-86	09/09/87	3	1.6 ± 1.5	1.9	2.0		-.03 ± 16	2.9	.02 ± .32	0.4
65-86	10/19/87	4	DRY							
65-86	02/29/88	1	4.0 ± 0.4		NR		0.00 ± 0.25		0.00 ± 0.20	
65-86	04/18/88	2	2.3 ± 0.4		NR		0.02 ± 0.06	0.15	0.00 ± 0.16	0.84
65-86	07/19/88	3	DRY							
65-86	10/21/88	4	DRY							
66-86	05/11/87	1	See total radiochemistry							

Notes: NR = Analyte not reported
*** = Insufficient Sample for Radiochemistry Analytes

Groundwater Dissolved Radiochemistry Results

for Regulated Units at Rocky Flats Plants

ALLUVIAL WELLS DOWNGRADIENT OF THE 881 HILLSIDE

Well Number	Date Sampled	Qtr.	Gross Alpha PCI/L	(MDA)	Gross Beta PCI/L	(MDA)	Uranium 233, 234 PCI/L	(MDA)	Uranium 235 PCI/L	(MDA)
64-86	04/29/87	1	See total radiochemistry							
64-86	05/28/87	2	***							
64-86	07/16/87	3	***							
64-86	10/12/87	4	DRY							
64-86	02/17/88	1	10 ± 8		-2 ± 12		1.7 ± 0.4		0.17 ± 0.11	
64-86	04/11/88	2	6 ± 8	17	5 ± 16	38	3.0 ± 0.4		0.07 ± 0.04	0.09
64-86	07/13/88	3	DRY							
64-86	10/21/88	4	DRY							
65-86	05/13/87	1	See total radiochemistry							
65-86	05/28/87	2	See total radiochemistry							
65-86	07/16/87	3	***							
65-86	09/09/87	3	1.5 ± 19	29	23 ± 27	66	4.2 ± 1.9		0.4 ± 0.5	
65-86	10/19/87	4	DRY							
65-86	02/29/88	1	4 ± 9		-4 ± 17		5.5 ± 0.5		0.14 ± 0.08	
65-86	04/18/88	2	10 ± 6		7 ± 10	22	2.8 ± 0.4		0.07 ± 0.04	0.14
65-86	07/19/88	3	DRY							
65-86	10/21/88	4	DRY							
66-86	05/11/87	1	See total radiochemistry							

Notes: NR = Analyte not reported
*** = Insufficient Sample for Radiochemistry Analytes

DISSOLVED RADIOCHEMISTRY RESULTS SUMMARY
FOR GROUND WATER AT Rockwell (Rocky Flats)

Analyte	Maximum Value	Minimum Value	Number of Samples			Mean Value*
			Above Detection	Below Detection	Not Reported	
ALLUVIAL WELLS DOWNGRADIENT OF THE 881 HILLSIDE						
Gross Alpha (pci/L))	100 ± 70	1 ± 4	18	0	2	24
Gross Beta (pci/L)	254 ± 68	-.4 ± 17	18	0	2	31
Uranium 233,234 (pci/L)	13.180 ± 1.750	0.12 ± 0.24	20	0	0	6.955
Uranium 235 (pci/L)	0.8 ± 0.5	0.00 ± 0.03	18	0	2	0.252
Uranium 238 (pci/L)	8.9 ± 1.6	0.03 ± 0.23	20	0	0	4.350
Strontium 89, 90 (pci/L)	5.6 ±	<1.0 ±	4	0	16	2.850
Plutonium 239, 240 (pci/L)	.42 ± .81	-0.042 ± 0.037	19	0	1	0.039
Americium 241 (pci/L)	0.5 ± 2.5	-.04 ± .75	18	0	2	0.029
Cesium 137 ( )			0	0	20	
Tritium (pci/L)	510 ± 290	<220 ±	18	0	2	52

* - For activities above detection only

ALLUVIAL WELLS DOWNGRADIENT OF THE 881 HILLSIDE

DISSOLVED RADIOCHEMISTRY RESULTS

Groundwater Total Radiochemistry Results
for Wells at Rocky Flats Plant

ALLUVIAL WELLS DOWNGRADIENT OF THE 881 HILLSIDE

Well Number	Date Sampled	Qtr.	Cesium 137 pCi/l	Tritium pCi/l
48-87	04/13/88	2	***	
48-87	07/18/88	3	DRY	
48-87	10/21/88	4	DRY	
55-87	11/30/87	4	***	
55-87	11/30/87	4	***	
55-87	02/15/88	1	DRY	
55-87	04/11/88	2	DRY	
55-87	07/13/88	3	DRY	
55-87	10/21/88	4	DRY	

Notes: NR = Analyte not reported
*** = Insufficient Sample for Radiochemistry Analyses

Groundwater Total Radiochemistry Results
for Wells at Rocky Flats Plant

ALLUVIAL WELLS DOWNGRADIENT OF THE 881 HILLSIDE

Well Number	Date Sampled	Qtr.	Uranium 238 pCi/l	Strontium 89.90 Pci/l	Plutonium 239 pCi/l	Americium 241 pCi/l
48-87	04/13/88	2	***			
48-87	07/18/88	3	DRY			
48-87	10/21/88	4	DRY			
55-87	11/30/87	4	***			
55-87	11/30/87	4	***			
55-87	02/15/88	1	DRY			
55-87	04/11/88	2	DRY			
55-87	07/13/88	3	DRY			
55-87	10/21/88	4	DRY			

Notes: NR = Analyte not reported
*** = Insufficient Sample for Radiochemistry Analyses

Groundwater Total Radiochemistry Results
for Wells at Rocky Flats Plant

ALLUVIAL WELLS DOWNGRADIENT OF THE 881 HILLSIDE

Well Number	Date Sampled	Qtr.	Gross Alpha pCi/l	Gross Beta pCi/l	Uranium 233, 234 pCi/l	Uranium 235 pCi/l
48-87	04/13/88	2	***			
48-87	07/18/88	3	DRY			
48-87	10/21/88	4	DRY			
55-87	11/30/87	4	***			
55-87	11/30/87	4	***			
55-87	02/15/88	1	DRY			
55-87	04/11/88	2	DRY			
55-87	07/13/88	3	DRY			
55-87	10/21/88	4	DRY			

Notes: NR = Analyte not reported
*** = Insufficient Sample for Radiochemistry Analyses

Groundwater Total Radiochemistry Results
for Wells at Rocky Flats Plant

ALLUVIAL WELLS DOWNGRADIENT OF THE 881 HILLSIDE

Well Number	Date Sampled	Qtr.	Cesium 137 pCi/l	Tritium pCi/l
02-87	07/09/87	3	See dissolved radiochemistry.	
02-87	10/07/87	4	See dissolved radiochemistry.	
02-87	10/08/87	4	See dissolved radiochemistry.	
02-87	02/10/88	1	See dissolved radiochemistry.	
02-87	04/07/88	2	See dissolved radiochemistry.	
02-87	07/13/88	3	See dissolved radiochemistry.	
02-87	10/20/88	4	See dissolved radiochemistry.	
02-87	11/14/88	4	***	
47-87	11/30/87	4	***	
47-87	11/30/87	4	***	
47-87	02/15/88	1	DRY	
47-87	04/13/88	2	DRY	
47-87	07/18/88	3	DRY	
47-87	10/21/88	4	DRY	
48-87	11/18/87	4	***	
48-87	11/18/87	4	***	
48-87	02/15/88	1	See dissolved radiochemistry.	

Notes: NR = Analyte not reported
*** = Insufficient Sample for Radiochemistry Analyses

Groundwater Total Radiochemistry Results
for Wells at Rocky Flats Plant

ALLUVIAL WELLS DOWNGRADIENT OF THE 881 HILLSIDE

Well Number	Date Sampled	Qtr.	Uranium 238 pCi/l	Strontium 89,90 pCi/l	Plutonium 239 pCi/l	Americium 241 pCi/l
02-87	07/09/87	3	See dissolved radiochemistry.			
02-87	10/07/87	4	See dissolved radiochemistry.			
02-87	10/08/87	4	See dissolved radiochemistry.			
02-87	02/10/88	1	See dissolved radiochemistry			
02-87	04/07/88	2	See dissolved radiochemistry.			
02-87	07/13/88	3	See dissolved radiochemistry.			
02-87	10/20/88	4	See dissolved radiochemistry.			
02-87	11/14/88	4	***			
47-87	11/30/87	4	***			
47-87	11/30/87	4	***			
47-87	02/15/88	1	DRY			
47-87	04/13/88	2	DRY			
47-87	07/18/88	3	DRY			
47-87	10/21/88	4	DRY			
48-87	11/18/87	4	***			
48-87	11/18/87	4	***			
48-87	02/15/88	1	See dissolved radiochemistry.			

Notes: NR = Analyte not reported
*** = Insufficient Sample for Radiochemistry Analyses

Groundwater Total Radiochemistry Results
for Wells at Rocky Flats Plant

ALLUVIAL WELLS DOWNGRADIENT OF THE 881 HILLSIDE

Well Number	Date Sampled	Qtr.	Gross Alpha pCi/l	Gross Beta pCi/l	Uranium 233,234 pCi/l	Uranium 235 pCi/l
02-87	07/09/87	3	See dissolved radiochemistry.			
02-87	10/07/87	4	See dissolved radiochemistry.			
02-87	10/08/87	4	See dissolved radiochemistry.			
02-87	02/10/88	1	See dissolved radiochemistry.			
02-87	04/07/88	2	See dissolved radiochemistry.			
02-87	07/13/88	3	See dissolved radiochemistry.			
02-87	10/20/88	4	See dissolved radiochemistry.			
02-87	11/14/88	4	***			
47-87	11/30/87	4	***			
47-87	11/30/87	4	***			
47-87	02/15/88	1	DRY			
47-87	04/13/88	2	DRY			
47-87	07/18/88	3	DRY			
47-87	10/21/88	4	DRY			
48-87	11/18/87	4	***			
48-87	11/18/87	4	***			
48-87	02/15/88	1	See dissolved radiochemistry.			

Notes: NR = Analyte not reported
*** = Insufficient Sample for Radiochemistry Analyses

Groundwater Total Radiochemistry Results
for Wells at Rocky Flats Plant

ALLUVIAL WELLS DOWNGRADIENT OF THE 881 HILLSIDE

Well Number	Date Sampled	Qtr.	Cesium 137 pCi/l		Tritium pCi/l
66-86	05-28/87	2	NR		<110
66-86	07/17/87	3		DRY	
66-86	10/19/87	4		DRY	
66-86	03/31/88	1		See dissolved radiochemistry.	
66-86	06/02/88	2		See dissolved radiochemistry.	
66-86	10/07/88			DRY	
66-86	12/23/88			DRY	
69-86	04/29/87	1	NR		300
69-86	05/26/87	2	NR		<110
69-86	07/06/87	3		See dissolved radiochemistry.	
69-86	10/07/87	4		See dissolved radiochemistry.	
69-86	10/08/87			See dissolved radiochemistry.	
69-86	02/10/88	1		See dissolved radiochemistry.	
69-86	04/11/88	2		See dissolved radiochemistry.	
69-86	07/18/88	3		See dissolved radiochemistry.	
69-86	10/20/88	4		See dissolved radiochemistry.	
02-87	05/29/87	2	1.4		120
02-87	06/24/87	2		***	

Notes: NR = Analyte not reported
*** = Insufficient Sample for Radiochemistry Analyses

Groundwater Total Radiochemistry Results
for Wells at Rocky Flats Plant

ALLUVIAL WELLS DOWNGRADIENT OF THE 881 HILLSIDE

Well Number	Date Sampled	Qtr.	Uranium 238 pCi/l	Stronium 89,90 pCi/l	Plutonium 239 pCi/l	Americium 241 pCi/l
66-86	05/28/87	2	0.94 ± 0.6	3.3	0.0 ± 0.63	0.0 ± 1.3
66-86	07/17/87	3	DRY			
66-86	10/19/87	4	DRY			
66-86	03/31/88	1	See dissolved radiochemistry.			
66-86	06/02/88	2	See dissolved radiochemistry.			
66-86	10/07/88		DRY			
66-86	12/23/88		DRY			
69-86	04/29/87	1	33 ± 5	.83	0.0 ± 2.1	0.0 ± 1.3
69-86	05/26/87	2	7.2 ± 1.3	<1.0	0.0 ± 0.6	0.0 ± 1.8
69-86	07/06/87	3	See dissolved radiochemistry.			
69-86	10/07/87	4	See dissolved radiochemistry.			
69-86	10/08/87		See dissolved radiochemistry.			
69-86	02/10/88	1	See dissolved radiochemistry.			
69-86	04/11/88	2	See dissolved radiochemistry.			
69-86	07/18/88	3	See dissolved radiochemistry.			
69-86	10/20/88	4	See dissolved radiochemistry.			
02-87	05/29/87	2	6.3 ± 1.9	0.74	0.9 ± 1.1	0.0 ± 6.0
02-87	06/24/87	2	***			

Notes: NR = Analyte not reported
*** = Insufficient Sample for Radiochemistry Analyses

Groundwater Total Radiochemistry Results
for Wells at Rocky Flats Plant

ALLUVIAL WELLS DOWNGRADIENT OF THE 881 HILLSIDE

Well Number	Date Sampled	Qtr.	Gross Alpha pCi/l	Gross Beta pCi/l	Uranium 233,234 pCi/l	Uranium 235 pCi/l
66-86	05-28/87	2	21 ± 8	55 ± 6	0.4 ± 0.71	0.07 ± 0.39
66-86	07/17/87	3	DRY			
66-86	10/19/87	4	DRY			
66-86	03/31/88	1	See dissolved radiochemistry.			
66-86	06/02/88	2	See dissolved radiochemistry.			
66-86	10/07/88		DRY			
66-86	12/23/88		DRY			
69-86	04/2/87	1	40 ± 7	49 ±75	12 ± 3	.66 ± .62
69-86	05/26/87	2	41 ± 13	75 ± 2	10 ± 2	0.3 ± 0.51
69-86	07/06/87	3	See dissolved radiochemistry.			
69-86	10/07/87	4	See dissolved radiochemistry.			
69-86	10/08/87		See dissolved radiochemistry.			
69-86	02/10/88	1	See dissolved radiochemistry.			
69-86	04/11/88	2	See dissolved radiochemistry.			
69-86	07/18/88	3	See dissolved radiochemistry.			
69-86	10/20/88	4	See dissolved radiochemistry.			
02-87	05/26/87	2	130 ± 17	100 ± 12	9.6 ± 2.6	.70 ± .76
02-87	06/24/87	2	***			

Notes: NR = Analyte not reported
*** = Insufficient Sample for Radiochemistry Analyses

Groundwater Total Radiochemistry Results
for Wells at Rocky Flats Plant

ALLUVIAL WELLS DOWNGRADIENT OF THE 881 HILLSIDE

Well Number	Date Sampled	Qtr.	Cesium 137 pCi/l	Tritium pCi/l
64-86	04/29/87	1	NR	<110
64-86	05/28/87	2	***	
64-86	07/16/87	3	***	
64-86	10/12/87	4	DRY	
64-86	02/17/88	1	See dissolved radiochemistry.	
64-86	04/11/88	2	See dissolved radiochemistry.	
64-86	07/13/88	3	DRY	
64-86	10/21/88	4	DRY	
65-86	05/13/87	1	NR	<110
65-86	05/28/87	2	NR	<110
65-86	07/16/87	3	***	
65-86	09/09/87	3	See dissolved radiochemistry.	
65-86	10/19/87	4	DRY	
65-86	02/29/88	1	See dissolved radiochemistry.	
65-86	04/18/88	2	See dissolved radiochemistry.	
65-86	07/19/88	3	DRY	
65-86	10/21/88	4	DRY	
66-86	05/11/87	1	NR	<110

Notes: NR = Analyte not reported
*** = Insufficient Sample for Radiochemistry Analyses

Groundwater Total Radiochemistry Results
for Wells at Rocky Flats Plant

ALLUVIAL WELLS DOWNGRADIENT OF THE 881 HILLSIDE

Well Number	Date Sampled	Qtr.	Uranium 238 pCi/l	Strontium 89,90 pCi/l	Plutonium 239 pCi/l	Americium 241 pCi/l
64-86	04/29/87	1	2.1 ± 1.0	NR	0.2 ± 1.1	0.0 ± 1.4
64-86	05/28/87	2	***			
64-86	07/16/87	3	***			
64-86	10/21/87	4	DRY			
64-86	02/17/88	1	See dissolved radiochemistry.			
64-86	04/11/88	2	See dissolved radiochemistry.			
64-86	07/13/88	3	DRY			
64-86	10/21/88	4	DRY			
65-86	05/13/87	1	1.9 ± 0.7	1.74	0.0 ± .65	0.0 ± 1.3
65-86	05/28/87	2	3.3 ± 1.0	<1.0	0.16 ± 0.78	0.0 ± 1.2
65-86	07/16/87	3	***			
65-86	09/09/87	3	See dissolved radiochemistry.			
65-86	10/19/87	4	DRY			
65-86	02/29/88	1	See dissolved radiochemistry.			
65-86	04/18/88	2	See dissolved radiochemistry.			
65-86	07/19/88	3	DRY			
65-86	10/21/88	4	DRY			
66-86	05/11/87	1	1.1 ± 0.7	4.01	0.0 ± .55	0.0 ± 1.2

Notes: NR = Analyte not reported
*** = Insufficient Sample for Radiochemistry Analyses

Groundwater Total Radiochemistry Results
for Wells at Rocky Flats Plant

ALLUVIAL WELLS DOWNGRADIENT OF THE 881 HILLSIDE

Well Number	Date Sampled	Qtr.	Gross Alpha pCi/l	Gross Beta pCi/l	Uranium 233, 324 pCi/l	Uranium 235 pCi/l
64-86	04/29/87	1	5 ± 14	-8 ± 2	1.7 ± 1.0	.13 ± .40
64-86	05/28/87	2	***			
64-86	07/16/87	3	***			
64-86	10/21/87	4	DRY			
64-86	02/17/88	1	See dissolved radiochemistry.			
64-86	04/11/88	2	See dissolved radiochemistry.			
64-86	07/13/88	3	DRY			
64-86	10/21/88	4	DRY			
65-86	05/13/87	1	31 ± 4	4 ± 10	3.6 ± 1.1	.04 ± .32
65-86	05/28/87	2	16 ± 0	42 ± 31	4.0 ± 1.1	0.22 ± 0.37
65-86	07/16/87	3	***			
65-86	09/09/87	3	See dissolved radiochemistry.			
65-86	10/19/87	4	DRY			
65-86	02/29/88	1	See dissolved radiochemistry.			
65-86	04/18/88	2	See dissolved radiochemistry.			
65-86	07/19/88	3	DRY			
65-86	10/21/88	4	DRY			
66-86	05/11/87	1	23 ± 13	28 ± 27	0.0 ± .54	.15 ± .46

Notes: NR = Analyte not reported
*** = Insufficient Sample for Radiochemistry Analyses

ALLUVIAL WELLS DOWNGRADIENT OF THE 881 HILLSIDE
TOTAL RADIOCHEMISTRY RESULTS

TOTAL RADIOCHEMISTRY RESULTS SUMMARY
FOR GROUND WATER AT Rockwell (Rocky Flats)

Analyte	Maximum Value	Minium Value	Number of Samples: Above Detection	Below Detection	Not Reported	Mean Value*
ALLUVIAL WELLS DOWNRADIENT OF THE 881 HILLSIDE						
Gross Alpha (pci/l)	130 ± 17	5 ± 14	8	0	0	38
Gross Beta (pci/l)	100 ± 12	-8 ± 2	8	0	0	43
Uranium 233, 234 (pci/l)	12 ± 3	0.0 ± .54	8	0	0	5.162
Uranium 235 (pci/l)	.70 ± .76	.04 ± .32	8	0	0	0.284
Uranium 238 (pci/l)	33 ± 5	0.94 ± 0.6	8	0	0	6.980
Strontium 89, 90 (pci/l)	4.01 ±	<1.0 ±	7	0	1	1.517
Plutonium 239, 240 (pci/l)	0.9 ± 1.1	0.0 ± .65	8	0	0	0.158
Americium 241 (pci/l)	0.0 ± 6.0	0.0 ± 1.4	8	0	0	0.000
Cesium 137 (pci/l)	1.4 ±	1.4 ±	1	0	7	1.400
Tritium (pci/l)	300 ±	<110 ±	8	0	0	53

* - For activities above detection only.

Groundwater Inorganic Results
For Wells at Rockwell (Rocky Flats)
ALLUVIAL WELLS DOWNGRADIENT OF THE 881 HILLSIDE

Well Number	Date Sampled	Qtr.	Total Dissolved Solids MG/L	Chloride MG/L	Nitrate+ Nitrite-Nitrogen MG/L	Sulfate MG/L	HC03- MG/L
66-86	05/28/87	2	249	19.8	0.20 U	33.0	150
66-86	07/17/87	3	DRY				
66-86	10/19/87	4	DRY				
66-86	03/31/88	1	209	42.6	0.09	27.0	73.9
66-86	06/02/88	2	163	20.1	0.02 U	24.8	83.9
66-86	10/07/88		DRY				
66-86	12/23/88		DRY				
69-86	04/29/87	1	1017	114	2.30	270	385
69-86	05/26/87	2	929	85.5	1.80	53.0	379
69-86	07/06/87	3	892	85	1.72	167	362
69-86	10/07/87	4	841	91.1	1.10	173	375
69-86	10/08/87		INSUFFICIENT SAMPLE FOR INORGANIC ANALYSIS				
69-86	02/10/88	1	997	113	1.66	260	401
69-86	04/11/88	2	960	102	3.90	233	387
69-86	07/18/88	3	915	104	4.29	256	382
69-86	10/20/88	4	894	18.2	1.92	253	337
02-87	05/29/87	2	547	66.0	0.20 U	99.0	275

Notes: NR = Analyte not reported
J = Present below detection limit
U = Analyzed but not detected
B = Present in laboratory blank

Groundwater Inorganic Results
For Wells at Rockwell (Rocky Flats)
ALLUVIAL WELLS DOWNGRADIENT OF THE 881 HILLSIDE

Well Number	Date Sampled	Qtr.	Total Dissolved Solids MG/L	Chloride MG/L	Nitrate+ Nitrite-Nitrogen MG/L	Sulfate MG/L	HC03- MG/L
48-87	02/15/88	1	2081	838	0.32	218	198
48-87	04/13/88	2	INSUFFICIENT SAMPLE FOR INORGANIC ANALYSIS				
48-87	07/18/88	3	DRY				
48-87	10/21/88	4	DRY				
55-87	11/30/87	4	INSUFFICIENT SAMPLE FOR INORGANIC ANALYSIS				
55-87	11/30/87	4	INSUFFICIENT SAMPLE FOR INORGANIC ANALYSIS				
55-87	02/15/88	1	DRY				
55-87	04/11/88	2	DRY				
55-87	07/13/88	3	DRY				
55-87	10/21/88	4	DRY				

Notes: NR = Analyte not reported
J = Present below detection limit
U = Analyzed but not detected
B = Present in laboratory blank

Groundwater Inorganic Results
For Wells at Rockwell (Rocky Flats)
ALLUVIAL WELLS DOWNGRADIENT OF THE 881 HILLSIDE

Well Number	Date Sampled	Qtr.	Total Dissolved Solids MG/L	Chloride MG/L	Nitrate+ Nitrite-Nitrogen MG/L		Sulfate MG/L	HC03- MG/L
02-87	06/24/87	2	INSUFFICIENT SAMPLE FOR INORGANIC ANALYSIS					
02-87	07/09/87	3	549	66	0.54		81.0	283
02-87	10/07/87	4	525	73.3	0.20	U	71	309
02-87	10/08/87	4	INSUFFICIENT SAMPLE FOR INORGANIC ANALYSIS					
02-87	02/10/88	1	558	73.0	0.02	U	81.0	387
02-87	04/07/88	2	620	71.4	0.02	U	83.0	371
02-87	07/13/88	3	595	94.2	0.02	U	102	381
02-87	10/20/88	4	623	91.6	2.54		96.3	383
02-87	11/14/88	4	INSUFFICIENT SAMPLE FOR INORGANIC ANALYSIS					
47-87	11/30/87	4	INSUFFICIENT SAMPLE FOR INORGANIC ANALYSIS					
47-87	11/30/87	4	INSUFFICIENT SAMPLE FOR INORGANIC ANALYSIS					
47-87	02/15/88	1	DRY					
47-87	04/13/88	2	DRY					
47-87	07/18/88	3	DRY					
47-87	10/21/88	4	DRY					
48-87	11/18/87	4	INSUFFICIENT SAMPLE FOR INORGANIC ANALYSIS					
48-87	11/18/87	4	INSUFFICIENT SAMPLE FOR INORGANIC ANALYSIS					

Notes: NR = Analyte not reported
J = Present below detection limit
U = Analyzed but not detected
B = Present in laboratory blank

Groundwater Inorganic Results
For Wells at Rockwell (Rocky Flats)
ALLUVIAL WELLS DOWNGRADIENT OF THE 881 HILLSIDE

Well Number	Date Sampled	Qtr.	Total Dissolved Solids MG/L	Chloride MG/L	Nitrate+ Nitrite-Nitrogen MG/L	Sulfate MG/L	HC03- MG/L
64-86	04/29/87	1	438	38.0	1.28	168	162
64-86	05/28/87	2	INSUFFICIENT SAMPLE FOR INORGANIC ANALYSIS				
64-86	07/16/87	3	742	44.0	0.99	133	306
64-86	10/12/87	4	DRY				
64-86	02/17/88	1	616	54.1	0.18	168	235
64-86	04/11/88	2	593	49.7	0.56	180	213
64-86	07/13/88	3	DRY				
64-86	10/21/88	4	DRY				
65-86	05/13/87	1	444	43.7	0.20 U	89.0	234
65-86	05/28/87	2	498	46.2	0.20 U	103	269
65-86	07/16/87	3	INSUFFICIENT SAMPLE FOR INORGANIC ANALYSIS				
65-86	09/09/87	3	655	64.0	0.20 U	190	306
65-86	10/19/87	4	DRY				
65-86	02/29/88	1	529	62.0	0.08	116	134
65-86	04/18/88	2	427	47.9	0.06	148	185
65-86	07/19/87	3	DRY				
65-86	10/21/87	4	DRY				
66-86	05/11/87	1	193	17.0	0.20 U	26.5	100

Notes: NR = Analyte not reported
J = Present below detection limit
U = Analyzed but not detected
B = Present in laboratory blank

ALLUVIAL WELLS DOWNGRADIENT OF THE 881 HILLSIDE
INORGANIC COMPOUND RESULTS

Groundwater Dissolved Metals Results
For Wells at Rockwell (Rocky Flats)
ALLUVIAL WELLS DOWNRADIENT OF THE 881 HILLSIDE

Well Number	Date Sampled	Qtr	Silver (Ag), diss. mg/l	Sodium (Na), diss. mg/l	Tin (Sn), diss. mg/l	Strontium (Sr), diss. mg/l	Thallium (Tl), diss. mg/l	Vanadium (V), diss. mg/l	Zinc (Zn), diss. mg/l
48-87	11/18/87	4	INSUFFICIENT SAMPLE FOR METALS ANALYSIS						
48-87	02/15/88	1	0.0076 U	211.3462	NR	2.9066	0.01 U	0.0240 U	2.4559
48-87	04/13/88	2	INSUFFICIENT SAMPLE FOR METALS ANALYSIS						
48-87	07/18/88	3							
48-87	10/21/88	4	DRY						
			DRY						
55-87	11/30/87	4	INSUFFICIENT SAMPLE FOR METALS ANALYSIS						
55-87	11/30/87	4	INSUFFICIENT SAMPLE FOR METALS ANALYSIS						
55-87	02/15/88	1	DRY						
55-87	04/11/88	2	DRY						
55-87	07/13/88	3	DRY						
55-87	10/21/88	4	DRY						

NR = Analyte not reported
J = Present below detected llimit
U = Analyzed but not detected
B = Present in laboratory blank
* = Holding time not met
N = Batch spoke not in 8–120% range
E = Estimated value

Groundwater Dissolved Metals Results
For Wells at Rockwell (Rocky Flats)

ALLUVIAL WELLS DOWNGRADIENT OF THE 881 HILLSIDE

Well Number	Date Sampled	Qtr.	Magnesium (Mg), diss. mg/l	Manganese (Mn), diss. mg/l	Mercury (Hg), diss. mg/l	Molybdenum (Mo), diss. mg/l	Nickel (Ni), diss. mg/l	Potassium (K), diss. mg/l	Selenium (Se), diss. mg/l
48-87	11/18/87	4	INSUFFICIENT SAMPLE FOR METALS ANALYSIS						
48-87	02/15/88	1	95.5074	0.4340	0.0002 U	0.0495	1.1827	7.0	0.033
48-87	04/13/88	2	INSUFFICIENT SAMPLE FOR METALS ANALYSIS						
48-87	07/18/88	3	DRY						
48-87	10/21/88	4	DRY						
55-87	11/30/87	4	INSUFFICIENT SAMPLE FOR METALS ANALYSIS						
55-87	11/30/87	4	INSUFFICIENT SAMPLE FOR METALS ANALYSIS						
55-87	02/15/88	1	DRY						
55-87	04/11/88	2	DRY						
55-87	07/13/88	3	DRY						
55-87	10/21/88	4	DRY						

NR = Analyte not reported
J = Present below detected llimit
U = Analyzed but not detected
B = Present in laboratory blank
* = Holding time not met
N = Batch spoke not in 8–120% range
E = Estimated value

Groundwater Dissolved Metals Results
For Wells at Rockwell (Rocky Flats)

ALLUVIAL WELLS DOWNGRADIENT OF THE 881 HILLSIDE

Well Number	Date Sampled	Qtr.	Cesium (Cs), diss. mg/l	Chromium (Cr), diss. mg/l	Cobalt (Co), diss. mg/l	Copper (Cu), diss. mg/l	Iron (Fe), diss. mg/l	Lead (Pb), diss. mg/l	Lithium (Li), diss. mg/l
48-87	11/18/87	4	INSUFFICIENT SAMPLE FOR METALS ANALYSIS						
48-87	02/15/88	1	0.02 U	0.0100 U	0.0220 U	0.3270	0.0069 U	0.005 U	0.1 U
48-87	04/13/88	2	INSUFFICIENT SAMPLE FOR METALS ANALYSIS						
48-87	07/18/88	3	DRY						
48-87	10/21/88	4	DRY						
55-87	11/30/87	4	INSUFFICIENT SAMPLE FOR METALS ANALYSIS						
55-87	11/30/87	4	INSUFFICIENT SAMPLE FOR METALS ANALYSIS						
55-87	02/15/88	1	DRY						
55-87	04/11/88	2	DRY						
55-87	07/13/88	3	DRY						
55-87	10/21/88	4	DRY						

NR = Analyte not reported
J = Present below detected llimit
U = Analyzed but not detected
B = Present in laboratory blank
* = Holding time not met
N = Batch spoke not in 8–120% range
E = Estimated value

Groundwater Dissolved Metals Results
For Wells at Rockwell (Rocky Flats)

ALLUVIAL WELLS DOWNGRADIENT OF THE 881 HILLSIDE

Well Number	Date Sampled	Qtr.	Aluminum (Al), diss. mg/l	Antimony (Sb), diss. mg/l	Arsenic (As), diss. mg/l	Barium (Ba), diss. mg/l	Beryllium (Be), diss. mg/l	Cadmium (Cd), diss. mg/l	Calcium (Ca), diss. mg/l
48-87	11/18/87	4	INSUFFICIENT SAMPLE FOR METALS ANALYSIS						
48-87	02/15/88	1	0.0290 U	0.02 U	0.003 J	0.3110	0.005 U	0.001 U	299.3337
48-87	04/13/88	2	INSUFFICIENT SAMPLE FOR METALS ANALYSIS						
48-87	07/18/88	3	DRY						
48-87	10/21/88	4	DRY						
55-87	11/30/87	4	INSUFFICIENT SAMPLE FOR METALS ANALYSIS						
55-87	11/30/87	4	INSUFFICIENT SAMPLE FOR METALS ANALYSIS						
55-87	02/15/88	1	DRY						
55-87	04/11/88	2	DRY						
55-87	07/13/88	3	DRY						
55-87	10/21/88	4	DRY						

NR = Analyte not reported
J = Present below detected llimit
U = Analyzed but not detected
B = Present in laboratory blank
* = Holding time not met
N = Batch spoke not in 8–120% range
E = Estimated value

Groundwater Dissolved Metals Results
For Wells at Rockwell (Rocky Flats)

ALLUVIAL WELLS DOWNGRADIENT OF THE 881 HILLSIDE

Well Number	Date Sampled	Qtr.	Silver (Ag), diss. mg/l	Sodium (Na), diss. mg/l	Tin (Sn), diss. mg/l	Strontium (Sr), diss. mg/l	Thallium (Tl), diss. mg/l	Vanadium (V), diss. mg/l	Zinc (Zn), diss. mg/l
02-87	05/29/87	2	NR	NR	NR	NR	0.01 U	NR	0.02 U
02-87	06/24/87	2	INSUFFICIENT SAMPLE FOR METALS ANALYSIS						
02-87	07/09/87	3	0.0076 U	147.4389	NR	0.4626	0.01 U	0.0240 U	0.0200 U
02-87	10/07/87	4	0.0076 U	144.1006	NR	0.4715	0.01 U	0.0240 U	0.0201
02-87	10/08/87	4	INSUFFICIENT SAMPLE FOR METALS ANALYSIS						
02-87	02/10/88	1	0.0076 U	123.2256	NR	0.6156	0.01 U	0.0360 U	0.0261
02-87	04/07/88	2	0.0076 U	119.4989	NR	0.8552	0.01 U	0.0360 U	0.0200 U
02-87	07/13/88	3	0.0076 U	120.5121	NR	1.2313	0.010 U	0.0360 U	0.0748
02-87	10/20/88	4	0.0076N U	111.2068	NR	1.4080	0.01 U	0.0360 U	0.0488
02-87	11/14/88	4	INSUFFICIENT SAMPLE FOR METALS ANALYSIS						
47-87	11/30/87	4	INSUFFICIENT SAMPLE FOR METALS ANALYSIS						
47-87	11/30/87	4	INSUFFICIENT SAMPLE FOR METALS ANALYSIS						
47-87	02/15/88	1	DRY						
47-87	04/11/88	2	DRY						
47-87	07/13/88	3	DRY						
47-87	10/21/88	4	DRY						
48-87	11/18/87	4	INSUFFICIENT SAMPLE FOR METALS ANALYSIS						

NR = Analyte not reported
J = Present below detected llimit
U = Analyzed but not detected
B = Present in laboratory blank
* = Holding time not met
N = Batch spoke not in 8–120% range
E = Estimated value

Groundwater Dissolved Metals Results
For Wells at Rockwell (Rocky Flats)

ALLUVIAL WELLS DOWNGRADIENT OF THE 881 HILLSIDE

Well Number	Date Sampled	Qtr.	Magnesium (Mg), diss. mg/l	Manganese (Mn), diss. mg/l	Mercury (Hg), diss. mg/l	Molybdenum (Mo), diss. mg/l	Nickel (Ni), diss. mg/l	Potassium (K), diss. mg/l	Selenium (Se), diss. mg/l
02-87	05/29/87	2	NR	NR	0.0003	NR	NR	5.0 U	0.005 U
02-87	06/24/87	2	INSUFFICIENT SAMPLE FOR METALS ANALYSIS						
02-87	07/09/87	3	12.2454	0.2178	0.0001 J	0.0533	0.0370	3.2	0.005 U
02-87	10/07/87	4	12.6281	0.4433	0.0004	0.0344	0.0370 U	6.2	0.005 U
02-87	10/08/87	4	INSUFFICIENT SAMPLE FOR METALS ANALYSIS						
02-87	02/10/88	1	17.0658	0.3739	0.0002 U	0.0220 U	0.0370 U	2.3	0.005 U
02-87	04/07/88	2	22.9480	0.3665	0.0002 U	0.0220 U	0.0370 U	1.9	0.005 U
02-87	07/13/88	3	26.5500	0.4379	0.0002 U	0.0220 U	0.0370 U	2.5	0.005 U
02-87	10/20/88	4	31.3471	0.5431	0.0002 U	0.0220 U	0.0370 U	1.9	0.005 U
02-87	11/14/88	4	INSUFFICIENT SAMPLE FOR METALS ANALYSIS						
47-87	11/30/87	4	INSUFFICIENT SAMPLE FOR METALS ANALYSIS						
47-87	11/30/87	4	INSUFFICIENT SAMPLE FOR METALS ANALYSIS						
47-87	02/15/88	1	DRY						
47-87	04/11/88	2	DRY						
47-87	07/13/88	3	DRY						
47-87	10/21/88	4	DRY						
48-87	11/18/87	4	INSUFFICIENT SAMPLE FOR METALS ANALYSIS						

NR = Analyte not reported
J = Present below detected llimit
U = Analyzed but not detected
B = Present in laboratory blank
* = Holding time not met
N = Batch spoke not in 8–120% range
E = Estimated value

Groundwater Dissolved Metals Results
For Wells at Rockwell (Rocky Flats)

ALLUVIAL WELLS DOWNGRADIENT OF THE 881 HILLSIDE

Well Number	Date Sampled	Qtr.	Cesium (Cs), diss. mg/l	Chromium (Cr), diss. mg/l	Cobalt (Co), diss. mg/l	Copper (Cu), diss. mg/l	Iron (Fe), diss. mg/l	Lead (Pb), diss. mg/l	Lithium (Li), diss. mg/l
02-87	05/29/87	2	0.2 U	NR	NR	NR	NR	0.005 U	0.02
02-87	06/24/87	2	INSUFFICIENT SAMPLE FOR METALS ANALYSIS						
02-87	07/09/87	3	0.2 U	0.0100 U	0.0220 U	0.0148	0.0069 U	0.005 U	NR
02-87	10/07/87	4	0.2 U	0.0100 U	0.0220 U	0.0101	0.1869	0.005 U	0.04
02-87	10/08/87	4	INSUFFICIENT SAMPLE FOR METALS ANALYSIS						
02-87	02/10/88	1	0.2 U	0.0100 U	0.0220 U	0.0064	0.0470	0.005 U	0.01 U
02-87	04/07/88	2	0.2 U	0.0100 U	0.0220 U	0.0063 U	0.0076	0.005 U	0.01 U
02-87	07/13/88	3	0.020 U	0.0100 U	0.0220 U	0.0083	0.1808	0.005 U	NR
02-87	10/20/88	4	0.2 U	0.0100 U	0.0220 U	0.0275	0.0472	0.005 U	NR
02-87	11/14/88	4	INSUFFICIENT SAMPLE FOR METALS ANALYSIS						
47-87	11/30/87	4	INSUFFICIENT SAMPLE FOR METALS ANALYSIS						
47-87	11/30/87	4	INSUFFICIENT SAMPLE FOR METALS ANALYSIS						
47-87	02/15/88	1	DRY						
47-87	04/11/88	2	DRY						
47-87	07/13/88	3	DRY						
47-87	10/21/88	4	DRY						
48-87	11/18/87	4	INSUFFICIENT SAMPLE FOR METALS ANALYSIS						

NR = Analyte not reported
J = Present below detected llimit
U = Analyzed but not detected
B = Present in laboratory blank
* = Holding time not met
N = Batch spoke not in 8–120% range
E = Estimated value

Groundwater Dissolved Metals Results
For Wells at Rockwell (Rocky Flats)

ALLUVIAL WELLS DOWNGRADIENT OF THE 881 HILLSIDE

Well Number	Date Sampled	Qtr.	Aluminum (Al), diss. mg/l	Antimony (Sb), diss. mg/l	Arsenic (As), diss. mg/l	Barium (Ba), diss. mg/l	Beryllium (Be), diss. mg/l	Cadmium (Cd), diss. mg/l	Calcium (Ca), diss. mg/l
02-87	05/29/87	2	NR	0.06 U	0.01 U	NR	NR	0.005 U	NR
02-87	06/24/87	2	INSUFFICIENT SAMPLE FOR METALS ANALYSIS						
02-87	07/09/87	3	0.0290 U	0.02 U	0.005 U	0.0622	0.005 U	0.001 U	46.8264
02-87	10/07/87	4	0.2600	0.02 U	0.005 U	0.1160	0.005 U	0.001 U	43.6185
02-87	10/08/87	4	INSUFFICIENT SAMPLE FOR METALS ANALYSIS						
02-87	02/10/88	1	0.0847	0.0340 U	0.005 U	0.0953	0.005 U	0.001 U	54.1928
02-87	04/07/88	2	0.0313	0.0340 U	0.005 U	0.0778	0.0010 U	0.0050 U	70.0849
02-87	07/13/88	3	0.0290 U	0.0563	0.005 U	0.1315	0.0017	0.0050 U	91.3990
02-87	10/20/88	4	0.0357	0.0392	0.005 U	0.1507	0.0010 U	0.0050 U	106.5044
02-87	11/14/88	4	INSUFFICIENT SAMPLE FOR METALS ANALYSIS						
47-87	11/30/87	4	INSUFFICIENT SAMPLE FOR METALS ANALYSIS						
47-87	11/30/87	4	INSUFFICIENT SAMPLE FOR METALS ANALYSIS						
47-87	02/15/88	1	DRY						
47-87	04/11/88	2	DRY						
47-87	07/13/88	3	DRY						
47-87	10/21/88	4	DRY						
48-87	11/18/87	4	INSUFFICIENT SAMPLE FOR METALS ANALYSIS						

NR = Analyte not reported
J = Present below detected llimit
U = Analyzed but not detected
B = Present in laboratory blank
* = Holding time not met
N = Batch spoke not in 8–120% range
E = Estimated value

Groundwater Dissolved Metals Results
For Wells at Rockwell (Rocky Flats)

ALLUVIAL WELLS DOWNGRADIENT OF THE 881 HILLSIDE

Well Number	Date Sampled	Qtr.	Silver (Ag), diss. mg/l	Sodium (Na), diss. mg/l	Tin (Sn), diss. mg/l	Strontium (Sr), diss. mg/l	Thallium (Tl), diss. mg/l	Vanadium (V), diss. mg/l	Zinc (Zn), diss. mg/l
66-86	05/11/87	1	0.0076 U	23.3693	NR	0.2074	0.0100 U	0.0240 U	0.02 U
66-86	05/28/87	2	0.0076 U	28.6255	NR	0.2748	0.01 U	0.0240 U	0.0200 U
66-86	07/17/87	3	DRY						
66-86	10/19/87	4	DRY						
66-86	03/13/88	1	0.0076 U	29.4104	NR	0.1921	0.010 U	0.0360 U	0.0466
66-86	06/02/88	2	0.0076 U	21.1230	NR	0.1450	0.01 U	0.0360 U	0.0281
66-86	10/07/88		DRY						
66-86	12/23/88		DRY						
69-86	04/29/87	1	0.0076 U	142.8058	NR	1.1452	0.01 U	0.0240 U	0.02 U
69-86	05/26/87	2	0.0076 U	134.4014	NR	1.0142	0.01 U	0.0240 U	0.0209
69-86	07/06/87	3	0.0076 U	139.0061	NR	1.0493	0.01 U	0.0240 U	0.0200 U
69-86	10/07/87	4	0.0076 U	129.8482	NR	0.8966	0.01 U	0.0240 U	0.0425
69-86	10/08/87		INSUFFICIENT SAMPLE FOR METALS ANALYSIS						
69-86	02/10/88	1	0.0076 U	134.3162	NR	1.1063	0.01 U	0.0360 U	0.0238
69-86	04/11/88	2	0.0076 U	121.7074	NR	1.0063	0.01 U	0.0360 U	0.0381
69-86	07/18/88	3	0.0076 U	133.4556	NR	1.0698	0.010 U	0.0360 U	0.0757
69-86	10/20/88	4	0.0076N U	141.3305	NR	1.1370	0.01 U	0.0360 U	0.0614

NR = Analyte not reported
J = Present below detected llimit
U = Analyzed but not detected
B = Present in laboratory blank
* = Holding time not met
N = Batch spoke not in 8–120% range
E = Estimated value

PROPOSED
INTERIM MEASURES/INTERIM REMEDIAL ACTION PLAN AND DECISION DOCUMENT
881 HILLSIDE AREA
(OPERABLE UNIT No. 1)

RESPONSIVENESS SUMMARY

U.S. Department of Energy
Rocky Flats Plant
Golden, Colorado

January 1990

A. OVERVIEW

The Department of Energy (DOE) is pursuing an Interim Measure/Interim Remedial Action (IM/IRA) at the 881 Hillside Area (Operable Unit No. 1) at the Rocky Flats Plant (RFP). This interim action is to be conducted to minimize the release of hazardous substances from this Area that pose a potential long-term threat to the public health and environment. The plan involves the collection of contaminated ground water, treatment by UV/hydrogen peroxide oxidation and ion exchange, and surface discharge of treated water that meets or exceed applicable water quality standards for parameters known to be present in the ground water. Complete information is presented in the document entitled "Final Interim Measures/Interim Remedial Action Plan and Decision Document, 881 Hillside Area, Operable Unit No. 1", dated January, 1990 Information concerning the proposed Interim Remedial Action was presented during a public meeting held from 6 to 10 p.m., Thursday, November 9, 1989, at the Front Range Community College in Westminster, Colorado.

This Responsiveness Summary presents all comments received at the public meeting, and DOE's response to those comments. Many of the comments were peripheral to the interim action plan; however, there were a number of technical comments on the plan that DOE f eels have been addressed herein. Two major issues that arose were the potential release of plutonium contaminated dust during construction of the interim action, and the routing of Woman Creek flow around Standley Lake, the drinking water supply for Westminster, Thornton, and Northglenn (Woman Creek is the proposed drainage where the effluent is to be discharged). The potential release of plutonium contaminated dust is addressed in the response to comment 6. The discharge to Woman Creek is discussed in the response to comment 1. There is mixed public opinion on routing of the flow around Standley Lake, and in many respects the issue is not germane to the proposed interim action (see our response to comment 1). Relative to the comments received at the public meeting, the public is generally in favor of the proposed interim action plan.

As with the issues mentioned above, there are at times several comments referring to the same issue. To facilitate cross referencing, issues where there were multiple comments are presented below with the associated comment numbers.

ISSUE	COMMENTS REFERRING TO ISSUE
Generation of plutonium contaminated dust	8, 12, 13, 15, 22, 26, 27, 28, 30, 40, 61, 66,72
Rerouting of Woman Creek flow	1, 21, 77, 78
Lack of upgradient/background data	14, 20, 23
Quality assurance problems	5, 9, 17
UV/Peroxide performance	25, 69
Misrepresenation of surrounding land use	11, 35, 62
Poor report organization	33, 46, 47
Potential for plutonium in ground water	43, 53, 60, 63
Closure of interim action facilities	30, 64
Water storage/treatment	52, 56, 65

These sections of the Responsiveness Summary follow:

- Background on Community Involvement
- Summary of Comments Received during the Public Meeting
- Remaining Concerns
- Attachment: Community Relations Work Plan

B. BACKGROUND ON COMMUNITY INVOLVEMENT

The Communications Department at Rocky Flats is developing a Community Relations Plan to actively involve the public in the decision-making process as it relates to environmental restoration activities. A work plan has been completed and forwarded to the Environmental Protection Agency (EPA), the Colorado Department of Health (CDH), and the public for review. The work plan specifies timeliness and activities planned to complete the Community Relations Plan, including plans for community interviews. Public questionnaires related to development of the plan have been distributed during public meetings for additional input.

In the meantime, efforts have been made to keep the public informed, and solicit public opinion, on current environmental restoration efforts, including the 881 Hillside Area. Notices were published in area newspapers announcing the availability of the public comment period on the Proposed Interim Measures/Interim Remedial Action Plan and Decision Document for the 881 Hillside Area. The public comment period was extended to provide adequate opportunity for public comment. A public presentation on the plan was made during the October meeting of the Rocky Flats Environmental Monitoring Council, while a second meeting to hear public comment on the Proposed Interim Remedial Action Plan was conducted November 9, 1989, at the Front Range Community College. Copies of appropriate documents are available for public review at the Rocky Flats Public Reading Room, U.S. EPA, and CDH.

The Communications Department also is continuing other public information efforts to ensure the public is kept informed of environmental restoration activities and other issues which relate to plant operations. A Speakers Bureau program sends speakers to civic groups and educational organizations, while a public tour program allows the public to visit Rocky Flats. Road tours of areas such as the 881 Hillside are common during public tours, as well as other tours arranged for public officials. An Outreach Program also is in place where plant officials will visit elected officials, the news media, and business and civic organizations to further discuss issues related to Rocky Flats and environmental restoration activities. The Communications Department also receives numerous public inquiries which are answered

during telephone conversations, or by sending written informational materials to the requestor.

Efforts also are under way to expand the Public Reading Room to an offsite location more easily accessible to the public, further ensuring public access to information about the plant. The reading room will house all pertinent public documents about the plant and ongoing environmental restoration activities.

C. RESPONSES TO COMMENTS RECEIVED DURING PUBLIC COMMENT PERIOD

On November 9, 1999, DOE held a public meeting to receive comments on the 881 Hillside Area IM/IRA. These comments are presented here in the order they were received at the public meeting. If written comments were also provided, they are presented here in lieu of the transcription of the verbal comments made at the meeting. However, if verbal comments requiring a DOE response were presented at the meeting that are not reflected in the written comments, they have also been included here. Written comments were also provided by the City of Thornton and EPA that were not verbally presented at the public meeting. Their respective comments are at the end of this section. The comments have been subdivided at points where the issue or subject changes, and the DOE response directly follows. All comments have been numbered sequentially to allow cross-referencing of responses.

COMMENTOR: George Hovorka, Mayor, City of Westminster

Comment 1

I'm appearing on behalf of the City to comment on the Proposed Interim Measures / Interim Remedial Action Plan and Decision Document for the 881 Hillside Area.

The City of Westminster supports the concept and plan to take immediate action to intercept and treat contaminated ground water at the 881 Hillside area. Failure to take such action could lead to the adverse impacts to the City's water supply, Standley Lake, which is located downstream of the 881 Hillside. Standley Lake supplies water to over 180,000 people in Westminster, Thornton and Northglenn. as well as irrigation water for shareholders in the Farmers Reservoir and Irrigation Company. Therefore, it is imperative that this work begin as soon as possible to protect the downstream water users. Westminster submits the following comments on the proposed plan:

The proposed plan calls for the water to be discharged to the south interceptor trench after it has been treated. The water then flows into Pond C-2. which is periodically discharged to Woman Creek, which flows into Standley lake. The City of Westminster strongly opposes this aspect of the plan in the absence of an interceptor canal around Standley Lake. Effluent generated at Rocky Flats should not be allowed to enter Standley Lake in order to protect public health. DOE's actions to oppose the permanent adoption of a water supply classification and associated standards for Woman Creek would further weaken the protection of Standley Lake, increasing the City's resistance to this proposed discharge.

DOE's opposition to the standards goes against DOE's "good neighbor" policy which they have publicly stated. Westminster, Thornton and Northglenn have been working with DOE on developing plans for the interceptor canal. However, no definite solution has been developed. Such an interceptor canal would not only protect Standley Lake during controlled discharges, but also during accidents and unknown releases.

Routing all water from Rocky Flats around Standley Lake effectively solves DOE's credibility problem with the general public, as the water can no longer impact the water supply. Without the interceptor canal, however, the City must seek the most stringent protection available to maintain its high quality water supply. Therefore, Westminster must oppose discharge to the south interceptor trench. Once an interceptor canal around Standley Lake is in place, the discharge as proposed would be acceptable.

Response to Comment 1

DOE recognizes and completely understands the concern of users of Standley Lake that potentially contaminated water could be released from the Rocky Flats Plant and enter this body of water used for drinking, agricultural, and recreational purposes. The issue goes beyond whether the effluent from the interim action treatment system is discharged into Woman Creek via Pond C-2. DOE is studying the issue and has met and will continue to meet with the representatives of the neighboring cities, EPA and CDH to discuss the matter. We do

note that there is public opposition to such a diversion canal (See comment 21). In the mean time, the water in Pond C-2 will continue to be chemically analyzed before it is released to assure that the concentrations of all chemical constituents are below the applicable Colorado Department of Health water quality standards set for the protection of public health and the environment. This monitoring is required by the Plant's National Pollutant Discharge Elimination System (NPDES) permit.

Comment 2

Westminster fully supports the remainder of the plan and urges DOE to pursue implementation of the plan aggressively. Questions did arise, however, during the review of the plan. Many stem from a lack of detail in the plan. For instance, there is no mention of how wide the French drain will be or what will be done with any ground water encountered during the construction operation. There was also not enough information available to determine if the French drain was located far enough downstream to capture all of the possible contaminated ground water. It would be helpful if Westminster could review further plans as they become available.

Response to Comment 2

We inadvertently omitted the width of the french drain. It will be two feet wide and is located hydraulically downgradient of confirmed organically contaminated alluvial ground water. The chemical data are shown in Table 2-2 (upgradient of the french drain) and Table 2-3 (downgradient of the french drain) of the plan (also see discussion on page 2-29). The treatment facility will be on-line to treat ground water collected during construction of the french drain (see the schedule on page 3-2 of the plan). Detailed design plans can be provided to the City of Westminster.

COMMENTOR: Joe Tempel, President, Rocky Flats Cleanup Commission

Comment 3

First of all, the public should be aware that this document describes the cleanup of only 12 of the 166 polluted sites at Rocky Flats. These sites contain cancer-causing volatile organic compounds and uranium tainted soils that have leached into the groundwater. These sites have been given priority for cleanup because the volatile organic compounds have percolated down to the groundwater which enters Woman's Creek which drains into Standley Reservoir, the drinking water supply for the northern suburbs. To put this cleanup proposal in another perspective; it will cost approximately $6 million to construct and operate compared to an estimate of $1 billion to cleanup the entire plant site. Therefore, while the RFCC is very excited that cleanup is finally progressing, this action is only the tip of the iceberg: or should we say the tip of the trash pile.

Response to Comment 3

We are aggressively pursuing the investigation and cleanup of the Rocky Flats Plant. Investigations have been conducted at the 881 Hillside Area, the, 903 Pad, Mound and East Trenches Areas, and at various units being cleaned up under the Resource Conservation and Recovery Act. We are spending approximately $ 65 million in fiscal year 1990 on environmental restoration activities. Construction of the final remedy for the 881 Hillside Area is scheduled to begin in 1994.

Comment 4

The public should also be aware that cleanup will take a very long time at the rate DOE is progressing. The purpose of the IRA is to begin cleanup on a temporary basis until a permanent solution can be agreed upon. Unfortunately, the temporary solution will not be operational until the Spring of 1991, about a year and a half away from now. This is not acceptable. Cleanup should be accelerated at the plant.

Response to Comment 4

We understand how the time frame for design, procurement and construction appears lengthy. However, given the size of the project, the 1-1/2 year time frame is not unreasonable. These activities occur in sequence, and several months is required for the procurement of some equipment once it is ordered from the vendor. However, we would like to point out that treatment of contaminated ground water will begin by December 19, 1990. These dates are reflected in the schedule on page 3-2 of the plan.

Comment 5

It is unclear when the permanent solution for these 12 sites will be in place because no schedule has been produced by DOE. This schedule is to be outlined in an Intergovernmental Agreement (IAG) which was due in October. In fact the permanent solution has been under study since 1987 when work began on the Remedial Investigation/Feasibility Study 881 Hillside. These reports have still not been completed because of the inadequacies in the draft reports. The following inadequacies were identified by the DOE Special Assignment Environmental Team in their Report entitled "Assessment of the Environmental Conditions at the Rocky Flats Plant", dated August 1989:

> *There is inadequate background characterization for metals and radionuclides primarily because there was only one background well drilled upgradient of the site to determine what contamination is being generated on-site versus off-site.*
>
> *There is a poorly defined extent of contamination because of the few number of test wells (33).*

There is inadequate quality control of testing so the data may not be valid.

Therefore, DOE admits that their past studies have been flawed and that a permanent solution cannot be defined until one completely understands the problem. The RFCC requests that these inadequacies be corrected as soon as possible so that a final cleanup solution can be implemented.

Response to Comment 5

The permanent remedy for the 881 Hillside Area is scheduled to begin in 1995. The Phase II remedial investigation (RI) did not resolve all outstanding issues regarding soil and ground water contamination at the 881 Hillside Area. The deficiencies cited above were largely a result of unrealistic schedules for the performance of RIs and feasibility studies (FSs), which was also noted by the Special Assignment Environmental Team. Comprehensive plans for completing the RI/FS will be submitted to EPA in February 1990 in accordance with the draft Inter-agency Agreement (IAG). The draft IAG schedule calls for the final remedial investigation /feasibility study to be completed in 1992.

Comment 6

While the IRA proposes to construct a french drain to collect the pollutants which are leaching into the groundwater, nothing is being proposed to cleanup the contaminated soils. The RFCC is concerned that the citizens and workers downwind of the construction of the drain may be contaminated by the radioactive dust disturbed on the surface of the ground. The RFCC wants to review a Health and Safety Plan which describes how the workers and community will be protected during construction. The RFCC does not want the cleanup to create additional health risks to the workers and the community like that which was experienced at the Rocky Mountain Arsenal. The RFCC also wants adequate monitoring to be in place during construction so that environmental standards are not exceeded.

Response to Comment 6

The nature, magnitude, and extent of contaminated soils is still under investigation; however, it is recognized that plutonium is above background in surface soils at the 881 Hillside Area. Surface soils samples have yielded plutonium concentrations no greater than 5 pCi/gm, with the average level being 1.63 pCi/gm. Higher levels of plutonium are not expected to be encountered because samples did not show measurable concentrations of plutonium below the ground surface. Also, elevated levels of uranium have been identified in surface soils in four small discrete locations (< 10 sq. ft. each) with measured levels as high as 3,072 pCi/gm (draft Environmental Assessment for 881 Hillside (High Priority Sites) Interim Remedial Action, November 30, 1989).

A Rockwell Job Safety Analysis (JSA) will be prepared before construction that will specify dust control measures to limit dust inhalation exposures. (The JSA is a process developed from the Rocky Flats Health and Safety policy. The JSA addresses health and safety protection of outside contractors). These measures include the premoistening of the excavation area with a sprinkler system for three days prior to start-up, and the continued moistening of the site throughout the excavation. Ambient air high volume air samplers will be used to measure radiation and wind velocity. These will be installed bef ore commencement of construction. Operations will be suspended by requirements in the Occupational Safety Analysis (OSA) if wind velocity exceeds 15 mph or alpha radiation exceeds 0.03 pCi/m^3 as measured by a high volume sampler located immediately downgradient of the construction activities. (The OSA addresses health and safety concerns originating from routine site operations, and is similar to the JSA.) A Health and Safety Plan will also be prepared for construction activities that will supplement the JSA.

Notwithstanding health and safety controls, an analysis has been made of the potential public exposure from inhalation of dust contaminated with plutonium and uranium, and the

committed effective dose equivalent (CEDE) from such intake. Conservatively assuming the amount of dust resuspended remains less than 10 mg/m^3 (the OSHA regulatory limit on nuisance dust in the work environment), the wind velocity is 3 m/sec, and exposure occurs at the closest property boundary, the CEDE calculated for uranium is 5×10^{-5} Rem, and for plutonium is 8×10^{-8} Rem. These totals may be compared to the DOE radiation protection standard for the public of 1×10^{-1} Rem per year. As can be seen, the public exposure to plutonium and uranium is insignificant relative to the DOE radiation protection standard for the public (Environmental Assessment for 881 Hillside, November 30, 1989).

Even though the health risk from inhalation of plutonium contaminated dust is low at the 881 Hillside, DOE respects the concerns of the public and intends to investigate several options for control of plutonium contaminated dust for use at other more contaminated sites. These options include a vacuum extraction system for removing the uppermost layer of loose soil before construction commences, addition of cement type additives to bind the surface soils and minimize the release of plutonium contaminated dust, and a mobile enclosure with a ventilation/filtering system to remove plutonium dust before it is released to the atmosphere. At all sites where plutonium contaminated soils exist, including the 881 Hillside Area, construction traffic will be carefully routed to further minimize release of any plutonium contaminated dust.

Comment 7

Finally, the RFCC wants to see a Community Involvement Plan which outlines how the community will be informed of the progress of the cleanup and given assurance that environmental standards are being met.

Response to Comment 7

The attachment to this Responsiveness Summary is the Community Relations Work Plan. Implementation of the Community Relations Plan (CRP) will provide the public with accurate, timely, and understandable information, and steps the public can take to participate in decisions regarding cleanup activities at the 881 Hillside Area and the entire Rocky Flats Plant Site. The community relations program will allow the public the opportunity to learn about the Site, the Superfund program, and to provide input on technical decisions during the investigations and studies prior to remediation. The program will also keep the public continuously informed of on-going cleanup activities, including the interim action at the 881 Hillside Area. The Work Plan (see Attachment) provides a schedule for the activities and public involvement that lead to finalizing a Community Relations Plan.

COMMENTOR: Gregory K. Marsh, Treasurer, Rocky Flats Cleanup Commission

Comment 8

Although plutonium deposition on the area surrounding the RFP as a result of the 1957 and 1969 fires and other events is not well understood, the fact remains the National Institute of Standards and Technology (formerly the National Bureau of Standards) chose the soil from the RFP, in July, 1978, to make a plutonium in soil standard. (Development of some natural matrix standards - progress report. Environment International, Vol. 3, pp 395-398, Pergamon Press 1980. Published in Great Britain.) Specifically, the standard, SRM 4353, was made from a 13 cm deep sample taken along the east perimeter fence just north of the southeast corner of the RFP. To make this standard, 600 kg of this soil was "diluted" with 300 kg of soil taken from near the western fence to get the plutonium concentration down to a level of about ten (10) times average, world-wide "background" levels. (From a conversation with Robin Hutchinson, NIST, Gaithersburg, MD. on 12 July, 1989.) This standard reference material is now being used by the scientific community around the world to calibrate their instruments.

Given this fact, how can the surface of 881 Hillside where the french drain is proposed, which is 2.9 kms west of the place from where the soil standard was taken, be free of surface plutonium contamination?

Response to Comment 8

As stated in response to comment 6, it is recognized that plutonium concentrations in surface soils at the 881 Hillside Area are above background and appropriate measures will be taken to minimize any release of plutonium contaminated dust during construction. The Rocky Flats Plant Annual Environmental Report, a public document which provides a summary of the environmental monitoring conducted at the Plant, indicates elevated plutonium levels exist in the surface soils to the east within the Plant boundaries. The data show that the soils may contain up to 10 -100 times background levels of plutonium. However, these levels are typical of those observed at the 881 Hillside Area where the exposure due to dust inhalation has been shown to be minor (see our response to comment 6 for estimated exposures).

Comment 9

After an in-depth discussion with Mr. Tom Greengard of the methods used to determine what, where, and why to drill the monitoring wells that are used to assess the 881 Hillside it seems that no industry accepted protocol was followed. What is the statistical validity of the methods used? If the methods used are invalid and hence a wrong assessment made, was this a cover-up to conceal more important and dangerous conditions elsewhere?

Response to Comment 9

It seems there may have been a misunderstanding concerning the discussion with Mr. Greengard. EPA accepted protocols were followed to locate the monitoring wells at the 881 Hillside Area and include interpretation of existing ground water chemistry data, soil gas measurements, geophysics, and most importantly, mapping of disposal sites based on historical aerial photographs. Statistical methods were not needed to locate monitoring wells because of the information gained fromuse of these methods was more than adequate. There was and is no cover-up to conceal more dangerous conditions elsewhere.

COMMENTOR: Kim R. Grice, Rocky Flats Cleanup Commission

Comment 10

DOE and its contractors at Rocky Flats have not been very nice neighbors! They have polluted the groundwater and soil at their facility to the extent that remedial action is necessary to protect the public from added health risks. The public deserves to be informed that this is not a cleanup operation of hazardous waste; it is only an interim solution to keep the contamination at these sites from spreading.

Response to Comment 10

The proposed action at the 881 Hillside Area is both an initial cleanup of hazardous waste from past disposal practices and an interim solution to mitigate contamination migration. The interim action will be consistent with the final remedial action for the 881 Hillside Area. It is anticipated this interim action will be a major component of the final remedial action.

Comment 11

The IRA mentioned that RFP is located in a rural area where there was no schools, no hospitals. and no parks within 5 miles of the RFP site. This comment is grossly in error! The facts are that there exists 20 schools, a hospital called "Avista" in Louisville, 11 child care centers, and over 14 parks and public open space areas within 5 miles from the boundary of Rocky Flats. The map shown in figure 2-1 is not an updated map. It also blocks out major development areas east of RFP, and Broomfield is omitted completely. It is recommended that a detailed map showing current development, schools, hospitals, parks, etc., within a 10 mile radius of the RFP boundary be incorporated into this IRA. The population census in this report uses outdated 1980 data, when with a little effort current population figures could easily be obtained from county and city records.

Response to Comment 11

This section of the IRA has been updated to reflect more current information. The final interim remedial action plan that reflects these changes is now available for review in the Rocky Flats Public Reading Room. There was no intent to misrepresent land use in the general vicinity. The oversight was a result of the considerable attention given to the selection of the appropriate interim action given the chemical conditions at the 881 Hillside Area.

Comment 12

There is very little mention in this IRA regarding soil characterization. There is much concern that this remediation project will disturb soils contaminated with varying levels of plutonium and other radionuclides (see HUD's RF Advisory Notice attached). The resuspension of respirable size dust containing radioactive elements could have direct health impacts on citizens residing and working downwind when these particulates are inhaled or ingested. As noted in attached chart, there has been an escalation of airborne contamination during past soil excavations at RFP. The excavation requires 2100 feet of French Drain and 1320 feet of Slurry Walls that are 4-20 feet deep. Excavation also includes over 2500 feet of effluent piping trenches and the excavation and encapsulating 86,000 square feet of contaminated soil. We are not informed of the total amount of soil (cubic yards) that will be excavated at these sites. Much of the proposed remedial area contains large quantities of plutonium contamination of the soil (see attached Krey and Hardy map). A complete chemical and radionuclide soil characterization for specific construction sites has not been performed and included in this IRA, why? Will the proposed sites be tested for total amount of respirable size particulates to determine the amount of airborne dust that could be resuspended during construction? How many cubic yards of soil will be removed from the borrowed site south of Woman Creek; and what will be its characterization? What safety precautions are planned for the workers? What will be the health risks to the public during the

remedial actions? It is recommended that a closed environmental chamber be used to conduct any excavation within, in order to limit and filter resuspended contaminates before release to the outside environment.

Response to Comment 12

There appears to be some misunderstanding of activities associated with the proposed interim remedial action, and activities associated with the other alternatives that were evaluated. The slurry walls and borrow site south of Woman Creek refer or to the second alternative, which is not the preferred and proposed interim remedial action.

DOE very much appreciates your concern for generation of respirable size particulates during construction that may be contaminated with plutonium. However, in order to allay your concern, we note that the plutonium contamination is at the surface and therefore the total volume of material excavated should not matter to the generation of respirable size particulates possibly contaminated with plutonium. The french drain and piping are located such that encountering soils contaminated with organics is unlikely. Chemical testing will be conducted on these soils prior to excavation to assess whether organic contaminants or radionuclides are present, so that the appropriate health and safety measures, as well as storage and final disposition of excavated soils can be determined. Our response to comment 6 addresses the potential public exposure to plutonium contaminated dust, and the health and safety measures that will be taken to further minimize these risk. The use of a closed environmental chamber cannot be justified at this time, however, it is being carefully studied as an option to minimize generation of plutonium contaminated dust at more contaminated sites.

Comment 13

The IRA needs to include a comprehensive site specific ambient air monitoring plan. Meteorological data pertinent to these sites is needed to determine direction and distance, etc., that this respirable dust might travel. According to a 1987 Meteorological Tracer Study published in September 1988 by Rockwell, the distribution of emission plumes can be dynamic. The report mentions that during the 12 day study, tracer elements traveled west to the Continental Divide and as far east as 45 miles from the release site located near the 903 Pad. It was interesting to note that during the tests, the plume was in contact with the ground. Sector #2 which is southeast of the RFP, according to the Colorado Department of Health, continually reports the highest levels for plutonium in soils (see CDH map and chart attached).

Response to Comment 13

You are quite correct that meteorological data is necessary for these sites in order to design and implement a sound air monitoring program. DOE fully intends to conduct a comprehensive air monitoring program as part of the health and safety monitoring during construction. All pertinent meteorological data will be incorporated into the plan for this air monitoring program. Please see response to comment 6 for more details.

Comment 14

Deficiency in characterizing extent of soil and groundwater contamination:

- *Vertical / horizontal profile (3 dimensional) of extent of the groundwater plume should be characterized and included.*

- *There are no wells north of the SWMUs.*

- *Existing soil data does not characterize adequately the current status of the contaminated area.*

Response to Comment 14

The response to comment 5 discusses the shortcomings of the previous remedial investigation and the plans for correcting past deficiencies. Wells will be installed north of the Area to assess any impacts to ground water arising from other upgradient SWMUs on the plant site. These wells, and other wells and soil borings are being proposed in the Phase III Remedial Investigation / Feasibility Study Plan to be submitted to the regulatory agencies in February 1990. The data discussed in the interim remedial action plan is of adequate quality (data have been validated and found to be valid or acceptable with qualifications), and provides sufficient detail of the ground-water contamination in surficial materials to justify and define the scope of the proposed interim remedial action.

Comment 15

Radioactive ambient air monitoring program is deficient.

- *Ambient air monitoring should analyze for uranium and americium as well as plutonium.*

- *Design and install new samplers to limit particulate losses within the samplers.*

- *Incorporate flow control systems that will maintain a constant air flow rate over sampling period.*

- *Expedite an air dispersion study to verify and design new ambient air monitoring sampling network.*

Response to Comment 15

An extensive air monitoring network known as the Radioactive Ambient Air Monitoring Program (RAAMP) is maintained at the Plant in order to monitor particulate emissions from Plant facilities and soils. The RAAMP has found ambient air samples for plutonium to be well within the DOE guidelines of 20.0×10^{-15} FCi / ml established for the protection of human health. Americium and uranium are not presently measured because air emissions are expected to be less, and their maximumallowable concentration in air in an unrestricted area is 10 and 100 times greater than plutonium, respectively (Standards for Protection Against Radiation, 10 CFR 20, Appendix B, Table 2).

To further assess emissions of radionuclides and other toxic compounds from the facility, DOE has agreed to improve air quality monitoring at the Rocky Flats Plant (Agreement in Principle with CDH). Air quality monitoring provisions of this Agreement include:

- The DOE will submit a comprehensive air emissions inventory for CDH review.

- The DOE will provide a comprehensive materials balance of VOCs for CDH review.

- The DOE will identify all toxic and radioactive emissions coming from the facility (stacks, vents, ponds, etc.) and will support CDH in the use of an accepted emissions model to predict any areas of off-site impact.

- DOE will conduct promptly the stack testing necessary to verify the amount and type of emissions.

- The DOE will install continuous emission monitors in all appropriate sources to ensure continuous compliance with air pollution requirements.

- CDH will prepare a comprehensive review, in cooperation with EPA and local governments, of the air monitoring system and will implement needed improvements to the air quality monitoring network.

- CDH will deploy VOC ambient monitors off -site, as necessary.

Comment 16

Groundwater data and sampling.

- *Analytic data produced for the 881 site should be organized in a manner for easy reference and rapid evaluation by way of database systems that permit selection and sorting of several parameters.*
- *Sampling procedures to fully document chain of custody.*
- *Sampling team should be provided formal training in the use of methods, etc.*

Response to Comment 16

A computerized environmental data base is maintained in a database format and is called the Analytical Data Management System. With respect to the sampling procedures and training, the ER Program Standard Operating Procedures (SOPs) and Quality Assurance / Quality Control (QA / QC) Plan have been revised and provided to the field personnel. Both classroom and on-the-job training is provided for field personnel. Data validation and audit programs have also been put into place. CDH and EPA have reviewed many of these procedures and will continue to review future plans during cleanup.

Comment 17

Quality assurance

- *A comprehensive quality assurance control program is recommended to adequately document the validity and analytical data for 881 Hillside remedial actions and assessments.*

Response to Comment 17

Quality assurance has suffered in the past with respect to environmental restoration activities. This has been largely due to the aggressive schedules for completing RCRA and CERCLA activities which precluded a thorough quality assurance review of data and deliverables. In effect, a quality assurance program commensurate with the volume of work being performed was missing. A comprehensive QA / QC Program is now currently in place. QA procedures adhere to the Environmental Restoration QA Program Plan and the QA / QC project plans. Chemical analyses are performed in accordance with the EPA Contract Laboratory Program and the QA / QC Plan, and data validation is performed by a qualified independent subcontractor.

Comment 18

Community relations

- *There is a lack of a finalized and implemented community relations plan for the 881 Hillside Remedial Corrective Action Program.*

Response to Comment 18

True, but preparation of a Community Relations Plan including community surveys is in progress. Please see Section B and the attachment to this Responsiveness Summary which contain a summary of community relations activities and the Community Relations Work Plan, respectively.

Comment 19

According to the 1987 Annual Environmental Monitoring Report, VOCs are detected in the bedrock ground water below the 903 Pad in Wells 1287, 1187 and 1487.

- *What effects will they have on the remediation at 881?*

Response to Comment 19

The interim action addresses shallow (alluvial) ground water contamination. Therefore possible bedrock ground water contamination will not influence the interim action. Future investigations at both the 881 Hillside Area and 903 Pad, Mound, and East Trenches Areas will characterize the nature and extent of bedrock ground-water contamination. If contaminated bedrock ground water in wells 12-87, 11-78, and 14-87 is determined to arise from the 881 Hillside Area, then remediation of this bedrock ground water will become a part of the final remedy for that Area.

Comment 20

Why was Well 5586 chosen as a background well?

Response to Comment 20

Well 55-86 was the only alluvial well upgradient of all historical waste disposal sites that was in existence at the time of the remedial investigation of the 881 Hillside Area. DOE recognizes this is far from adequate to characterize background ground water, and therefore a comprehensive background hydrogeochemical characterization program has now been implemented at the Rocky Flats Plant. Fifty wells have been installed and sampled, and over 100 soil samples collected to characterize background ground water and soils in 1989. Background stream sediments and surface water have also been characterized. A draft report was issued on December 15, 1989 (Background Geochemical Characterization Report). The background characterization program is on-going.

Comment 21

They Mayor of Westminster said he would accept said diversion canal to channel effluent from Pond C-2 around Standley Lake. I would like to inform everyone as a citizen of Westminster that said Rocky Flats effluents then would no longer be diverted by Standley Lake, but would flow near many residential areas down Big Dry Creek. This is not an acceptable solution to me.

Response to Comment 21

DOE recognizes your concern on this very controversial issue. Please refer to our response to comment 1.

Comment 22

While it makes sense to attempt to confine the spread of groundwater contamination in order to reduce added health risks imposed on the public, we should also be concerned about the daily emissions of radiotoxic waste from over 50 vents at this facility, and the subsequent inhalation / ingestion of these carcinogens by our family and friends.

Response to Comment 22

DOE appreciates your concern about these emissions. As discussed in our response to comment 15, the RAAMP is implemented in order to monitor plutonium emissions f rom the f acility, and additional more comprehensive monitoring will be undertaken pursuant to the Agreement in Principle.

COMMENTOR: Paula Elofson-Gardine, Director, Concerned Health Technicians for a Cleaner Colorado, Secretary, Rocky Flats Cleanup Commission

Comment 23

The lack of upgradient wells indicates deficiency regarding "background" levels of contaminants versus those found in alluvial measurements and groundwater wells in the area known as the 881 Hillside.

Response to Comment 23

Your are quite correct in pointing out this deficiency. As discussed in our response to comment 14, an upgradient well will be installed in order to define upgradient chemical conditions and allow determination of ground-water contamination originating only from the 881 Hillside Area. Furthermore, a comprehensive background hydrogeochemical background characterization program is now in place as discussed in our response to comment 20. Regardless of background concentrations, the ground-water treatment system proposed as part of the IM/IRA will remove organic and inorganic chemical constituents to levels that are below the applicable CDH water quality standards for the protection of public health and the environment.

Comment 24

There is serious deficiency regarding lack of chemical and radionuclide direct soil analysis both on and off-site for the determination of spread of contaminants originating from the Rocky Flats Plant.

Response to Comment 24

Considerable data exist today regarding on-site and off-site contamination. This data has been collected as part of remedial investigations, and Rockwell's Health, Safety, and Environment Department's environmental monitoring. This latter data is published in the Annual Environmental Monitoring Report. As you may be aware, DOE has recently signed a draft Interagency Agreement with the EPA and the CDH for investigation and cleanup of the Rocky Flats Plant. To supplement the existing data, a number of plans will be prepared in 1990 pursuant to that agreement that will serve to guide the investigations of the nature and extent of contamination at the Rocky Flats Plant. The draft Agreement has been released for public review and comment.

Comment 25

Sources of contaminants are not identified, so that an eventual permanent solution could be initiated. As an interim measure, the peroxide/UV application for destruction of VOCs is controversial, and has not been "proven" for remediations of this size. The benefit of this technology is questionable in terms of the volume it is capable of handling.

Response to Comment 25

You are correct to point out that sources of contaminants have not been adequately identified. Further source characterization is a specific objective of the upcoming Phase III Remedial Investigation of the 881 Hillside Area. With regard to UV/Peroxide, DOE is confident that the system will perform to the expectations inherent in the interim action plan. As described on pages 4-13 through 4-17, it is clear that UV/peroxide is a proven technology at the design flow rate. Also, UV/Peroxide systems are now in use at the DOE Lawrence Livermore facility in California, and locally, at the Boulder Syntex facility and Rocky Mountain Arsenal. Furthermore, the vendor of the equipment has guaranteed it's performance in meeting the

effluent standards given the expected influent characteristics. If during startup of the UV/Peroxide system the unit does not perform to specification, a carbon system may be installed as a final "polishing" unit to assure compliance with effluent standards. A carbon system can be installed readily and would remain in operation as long as needed.

Comment 26

In comparing the site diagrams of the Proposed Interim Measures / IRA Plan and Decision Document for the 881 Hillside area, the 903 Pad, Mound, and East Trenches Remedial Investigation, and the Rocky Flats Plant, site map in the Assessment of Environmental Conditions at the Rocky Flats Plant report, it appears that the area blocked outfor 881 remediation encroaches in part on the 903 Pad area. If this is so, how will the public be protected during the remediation process from the radionuclides liberated from this process? Resuspension is a problem.

Response to Comment 26

The 881 Hillside Area and 903 Pad Area due indeed overlap. Your review of this information has been thorough. However, the plutonium concentration data for surficial soils in this area of overlap do not pose a threat to the public from dust resuspension during construction. Please refer to our response to comment 6 regarding potential public exposure to plutonium contaminated dust, and techniques for minimization of such dust during construction of the 881 Hillside Area interim remedial action.

Comment 27

Migration from the 903 area to the 881 area is not addressed as a possible source of contaminants. The 885 building is adjacent to the 881 area as well. Where do the discharges from this building drain to? A chart detailing groundwater migration and the plant piping system and drains would assist in determining sources and potential toxicity.

Response to Comment 27

The only contamination arising from the 903 Pad that would influence contamination at the 881 Hillside is resuspension of plutonium contaminated soils. This will be referenced in the final IM/IRA Plan. Potential public exposure to plutonium contaminated dust and health and safety measures to be used during construction that minimize this exposure are discussed in our response to comment 6. Building 885 is a RCRA storage facility from which there are no discharges. The building and surrounding soils will be investigated and closed in accordance with the State of Colorado hazardous waste regulations. Ground water flow in surficial materials is to the south/southeast at the 881 Hillside Area. The proposed french drain has been located to the south / southeast downstream of all known organically contaminated ground water in surficial materials, and is designed to intercept this ground water to prevent it from entering into the ground water of the valley fill alluvium in the Woman Creek drainage.

Comment 28

No mention is made regarding protection of the community during remediation activities. Historically, monitoring of this are has shown elevated readings of radionuclide activity during these types of activities (eg: barrel removal). Please see report # RFP-3914, Dust Transport-Wind and Mechanical Resuspension. We would suggest a containment structure such as temporary buildings and / or domes be used to contain contaminants that are disturbed during cleanup phases of note such as drilling, earthmoving and the like.

Response to Comment 28

Please see our response to comment 6 which we are hopeful will alleviate your concern on this matter.

Comment 29

There is a lack of dispersion modeling for migration of plumes of contamination that would also assist in the identification of source points of many of the contaminants in question.

Response to Comment 29

There is insufficient data to use a dispersion model to determine the sources of contaminant plumes at the 881 Hillside. The hydrogeology at the 881 Hillside Area is relatively complex and not adequately defined for use of a ground water model. Furthermore, it is unlikely a ground water model will provide information that cannot be ascertained through interpretation of ground water surface elevation maps together with contaminant contour maps.

Comment 30

I have a couple of comments submitted to me by Neils Schoenbeck that I would like to submit with mine. They have a question as to existing data about the integrity of the impermeable membrane in the french drain for the period of 20 years. What is the known lifetime of that membrane? What plans exist for the disposal of the material of the french drain itself when the cleanup is completed? I think there is a great deal of concern about the proximity of the 903 Pad in light of the resuspension and windblown resuspension reports from the repository, that the problems with the resuspension in this area are not being addressed that already exist in that area, sands remediation.

Response to Comment 30

Synthetic membranes have been in use at waste disposal sites for over 20 years, many of which have not shown leakage. EPA guidance suggest the expected life of a synthetic membrane is no longer than 30 years. If repairs are required to the french drain during the course of the interim action, they will be undertaken immediately. This will be outlined in the Operation and Maintenance manual. If necessary, the french drain will be completely rebuilt, if liner leakage is frequent. When remediation is complete, the french drain will be removed and disposed in accordance with all regulatory requirements. The treatment facility may be used for other ground water treatment purposes, or decommissioned in accordance with RCRA closure regulations and DOE Orders when it has no further utility. Please see our response to comment 6 addresses resuspension of plutonium contaminated dust.

COMMENTOR: W.A. Kemper, Rocky Flats Cleanup Commission

Comment 31

This plan is, as its title states, only an interim remedial action, not a cleanup. But is a first step and accordingly, I believe it should be supported unless seriously flawed. I found it somewhat difficult to read and possibly containing some small technical errors easily correctable, but nothing that would cause it to be rejected.

Response to Comment 31

The interim action is a cleanup because contaminated ground water will be removed from the Area and treated. We recognize there are some small technical errors in the plan, and do appreciate your support of this action. This interim action is a significant step in the remediation of the 881 Hillside Area. The technical errors in the report will be corrected, and a final plan will be available for your review.

Comment 32

There is some question whether 881 Hillside should have been chosen for the initial remedial action. Perhaps it is the area of greatest immediate concern, but it does appear that the danger from 881 Hillside is principally from volatile organic compounds (VOCs) whereas the public's greatest concern is with radionuclides. But the public should be aware the VOCs are also toxic and can cause problems such as attributed to Martin Marietta. The cost of implementing this interim remedial action will be about $4.6 million. It will affect the removal of about 80 lb VOCs, 5 lb selenium, and 0.1 x 10^{-3} curie of radionuclides and other substances of lesser concern per year. More important, it should assure that seepage and drainage from 881 Hillside will present, absolutely no risk to the drinking water supply.

Response to Comment 32

The 881 Hillside Area was chosen for initial investigation and cleanup because of the high concentrations of organic contaminants in the ground water, many of which are carcinogenic, and the proximity of the contamination to a major drainage that leads to Standley Lake. DOE is aware that the public's general perception is that highly radioactive contaminated sites and off-site areas are of higher interest and concern. However, in dealing with the 881 Hillside first, DOE is implementing a policy of contaminant source control in an area where there is the greatest potential future risk to the public.

Comment 33

The report would be easier to read had it been organized differently and a table of acronyms been included. For example, it is to readily clear "alternatives" whether measures being discussed are for water treatment or for containment and collection. nor which measures are recommended of those being considered. The final proposed system is shown in Figure 6-1.

Response to Comment 33

The organization of the document generally follows EPA guidance for the preparation of an Engineering Evaluation/Cost Analysis (EE/CA) as defined in the proposed National Contingency Plan. We agree, the organization could be improved but it was mutually agreed with EPA that the EE/CA guidance would be followed. The revised plan will contain a table of acronyms. Consideration will be given for a different organization in future reports.

Comment 34

The site numbers, p. 2-3, do not correspond to the numbers on Figure 2-2.

Response to Comment 34

We have reviewed the site numbers and the numbers on the figure and have noted that SWMU 177 is not located on the map. SWMU 177 was not shown on the map because it will be closed under the State of Colorado hazardous waste regulations and therefore is not included in this interim action. Please excuse this confusion. The final plan will note the location of SWMU 177.

Comment 35

The "description of surrounding land use and population density" minimizes the area at risk. Are there not schools and hospitals closer than 6 and 10 miles from the plant and ranches closer than 10 miles? I'd say they are right adjacent. (Ranch and farm areas) Several new housing subdivisions are within a few miles of the buffer zone. See Figure 2-3. A 5 mile radius takes in all of Broomfield, most of Westminster and part of Arvada.

Response to Comment 35

Please see our response to comment 11 which addresses your concern. This section of the plan will be updated in the final interim remedial action plan.

Comment 36

It may be noted that all the VOCs above tolerated concentrations (AAAR) are chlorinated hydrocarbons. Are there no other appreciable amounts of non-volatile organic compounds; dioxins, PCBs or other? Of the metals, only selenium seems to be of appreciable concern, except of course the radionuclides. More needs be known about these. How much is natural uranium? How much is background? And, how much cesium and other fission products exist, if any? If any fission products are detected, I would not expect that they were from world wide fallout.

Response to Comment 36

No other Hazardous Substance List or Target Compound List non-volatile organic compounds are present in appreciable amounts. Selenium is of greatest concern, although manganese and to a lesser extent nickel are also of concern. Uranium is the only radionuclide of concern at the 881 Hillside Area ground water. Depleted uranium which is used at Rocky Flats has a U^{234}/U^{238} activity ratio less than one whereas natural uranium has a ratio greater than one. The activity ratio for uraniumin ground water at the 881 Hillside Area is always greater than 1 which suggest the uranium is natural, however, the concentrations are observed to be over 10 times background in some locations. Cesium 137 and strontium 89, 90 are radionuclides present in the environment due to fallout. There is insufficient data to determine if these radionuclides are above background in ground water at the 881 Hillside Area. The Phase III RI and background hydrogeochemical characterization will allow determination of whether these radionuclides are contaminants of the ground water. However, we note that an Independent Criticality Safety Assessment Team concluded in a report released in 1989, that there has not been a criticality at the Rocky Flats Plant. Their conclusion was based on review of radioactive cesium and strontium in soil and water, records of past operations, criticality procedural infractions, plant renovations, fires and radioactive exposures.

Comment 37

In tables 2-1, 2-2, and 2-3, 400 pCi/l is stated as background for tritium. How can there be a

background value for tritium since all is man made? The measured values for average tritium activity exceeds the average "gross" Beta activity by an order of magnitude. How can this be when all the tritium activity is Beta?

Response to Comment 37

We understand your confusion on this subject. The background value for tritium is simply the Minimum Detectable Activity for the analytical method, i.e., background concentrations of tritium are less than what can be measured. However, we do note that tritium is a naturally occurring isotope of hydrogen present in water and in the atmosphere. The gross beta value does not include tritium, i.e., tritium is associated with the water which is driven off prior to the analysis for gross beta.

Comment 38

If U (natural) content of the water to be treated is 15 pCi/l (p. 2-23, 2-27, and p. 4-26) and has an activity of 7 x 10^{-7} Ci/g. (See RFP response, p 12, to EPA 2/24/89) and most of this Uranium is absorbed on the strong base resin, this amounts to 285 g/yr. Will 28 cubic feet of the resin contain this for 30 years as stated? Quite reasonable to believe it should. 285 g/yr is only 0.6 lb/yr.

Response to Comment 38

Our calculations indicate 30 years to be a reasonable life of the resin.

Comment 39

Will French trench contain surface runoff in heavy rain?

Response to Comment 39

The french drain is not designed to intercept surface runoff at any time, i.e., it is covered. It is only designed to intercept ground water.

Comment 40

p. 4-49 Worker (and surrounding populace) protection requires that no radionuclides are released from the soil into the air and drift away.

Response to Comment 40

Please see our response to comment 6 that discusses your concern.

Comment 41

14,000 gallons of wastewater are generated per 100,000 gallons of water treated. What happens to this wastewater? See p. 4-28.

Response to Comment 41

As stated at the top of the paragraph. the Building 374 Process Waste Treatment System (a precipitation/flash evaporation process) will treat the regeneration waste. Waste regenerant will be transported to Building 374 by tanker truck.

Comment 42

P. 4-27. Does IR120 or IRA 94/402 remove Se? If not, and only the activated alumina absorbs the Selenium, a 50/50 split will not reduce the selenium to an ARAR level.

Response to Comment 42

IRA 94/402 removes selenium. It is the activated alumina that does not remove TDS. However, only one-third of the flow need be demineralized through the strong cation and anion system to achieve the TDS standard.

Comment 43

Will the Rohm & Haas IRA-402 resin remove any plutonium that might be present?

Response to Comment 43

Any plutonium that is present will be particulate in nature because of its very low solubility. Particulates will be removed by the influent filters, and the filters will be disposed off-site as a radioactive mixed waste. Plutonium would not be a problem in the effluent because of its very low solubility.

Comment 44

I am curious why old fuel oil tanks were filled with concrete rather than disposed of as scrap. Did they contain something more toxic than oil? See p. 2-3, site 4, 5.

Response to Comment 44

Filling tanks with concrete is a common practice for abandonment. It guarantees nothing else will be disposed in the tanks. We are not aware that the tanks contained anything else than oil.

Comment 45

Par. 2 of p. 2-1 states that the mission of the plant is fabrication of warhead components. I am left to wonder what else goes on in the plant that kilograms of plutonium, as reported in the press, were in the ducts.

Response to Comment 45

We recognize yours' and the public's concern regarding plutonium handling at the facility. However, the subject of plutonium operations is outside the scope of this interim remedial action plan.

COMMENTOR: Joseph Goldfield, P.E., Vice President, Rocky Flats Cleanup Commission

Comment 46

The problem is not stated until page 2-31. It should be up front.

Response to Comment 46

Please see our response to comment 33.

Comment 47

The plan should start with a summary and conclusions.

Response to Comment 47

We agree with you, but as stated in our response to comment 33, the EPA EE/CA guidance was agreed with EPA to be followed.

Comment 48

A section that defines the acronyms and initials designating agencies, laws, and many other items must be included.

Response to Comment 48

The regulatory climate pertaining to hazardous waste management and cleanup has created a preponderance of acronyms that are used routinely. We understand your frustration, and a table of acronyms will be provided in the final plan.

Comment 49

Table 3-1.2 - The ARAR for antimony is exceeded--0.0798>0.06.

Response to Comment 49

You are quite correct. This is a typographical error and will be corrected in the final plan.

Comment 50

Beryllium is extremely poisonous. In Table 3-22 why not set ARAR=005? In air maximum allowable concentrations for exposures to cadmium and selenium are 200 times greater than that for beryllium. Why is the concentration allowable in water set 10 times greater for beryllium than for either cadmium or selenium?

Response to Comment 50

The maximum allowable concentration for beryllium in air is 200 times lower than for cadmium and selenium because of the relatively more severe effects beryllium has on lung tissue. Therefore, the analogy is inappropriate for determining the allowable concentration in water.

Comment 51

In Tables 3-1.1 to 3-1.4. 29 ARARs are exceeded. When reducing them to acceptable limits, each one is considered as if there are no other dangerous materials present. In setting standards for the removal of air contaminants the presence of all contaminants are taken into account. The concentration of each one, after cleanup is divided by the maximum allowable concentration for that contaminant. The total of all the fractions cannot exceed one. Thus, even if each contaminant is brought down to an acceptable level, compliance is not achieved until all of the dangerous contaminant fractions with respect to the allowable maximum total less than one. Unless a similar method is used with water contaminants, synergistic effect are not accounted for.

Response to Comment 51

We are familiar with this methodology to account for additive effects. It is used routinely in risk assessments. However, the chemical specific ARARs identified for the 881 Hillside Area IM/IRA are largely CDH ground water standards or surface water standards for Woman Creek. There is no provision in the respective regulations for downward adjustment of these standards based on additive effects, i.e., compliance is achieved by meeting the chemical specific standards.

Comment 52

Table 4-1 gives the contaminant concentrations that are used as a basis for design of the removal systems. These values are lower than the maximum concentrations given in Tables 3-1.1 to 3-1.4. Why aren't the higher values used for system design? If average values are being used for design, that is dead wrong. It means that for about half of the time, type system is underdesigned.

Response to Comment 52

Flow is the most critical design parameter for sizing a treatment system. We believe the flow estimates for the IM/IRA to be conservative and thus the treatment system is adequately sized. The use of maximum concentrations versus average concentrations for contaminants having the greatest impact on the treatment operation, i.e., organics and total dissolved solids (majorions), would not change the design because these contaminants do not display high variability. The treatment system can handle the maximum expected loading of contaminants.

Comment 53

Page 4-10 says that carbon beds that must be discarded become a candidate for discharge at the Nevada test site. What radionuclides are being collected that pose such danger that the carbon must be shipped to Nevada? The report does not make this clear.

Response to Comment 53

On page 4-41, first paragraph, it is stated that uranium, either naturally occurring or from past waste disposal, will likely adsorb to the activated carbon. Uranium is the only radionuclide in the alluvial ground water at the 881 Hillside Area that is above estimated background concentrations. Thus, there is a concern over the radioactivity of the carbon increasing over time with the continued use of the carbon.

Comment 54

(See page 4-17)-A preheater will not "dehumidify" the air stripper emissions. If dehumidification is required a different process than preheating is needed. Heating the air will reduce the relative humidity.

Response to Comment 54

Dehumidify may be a poor choice of words. It is only necessary to reduce the relative humidity to prevent water from condensing on the carbon. The wording of this statement will be changed in the final interim remedial action plan.

Comment 55

Selenium has an ARAR of 0.01 mg/l but its concentration is 3.2 mg/l in the water stream that must be treated (320 times as much). Similarly total dissolved solids are 2374 mg/l but the ARAR is 400 mg/l - less than 20% of the amount to be treated. If only half the water flow is treated for each of the aforementioned constituents how can the required concentrations be attained?

Response to Comment 55

The expected influent concentration of total dissolved solids is 718 mg/l, not 2374 mg/l which is the maximum observed total dissolved solids concentration in the ground water. The influent concentration is significantly less than the maximumbecause the influent represents a blend of low total dissolved solids ground water from the footing drain with collected ground water from the french drain. Because both the activated alumina and two stage demineralizer remove selenium but the activated alumina does not remove total dissolved solids, it is only necessary to treat approximately half the flow with the two stage demineralizer to achieve the ARAR for total dissolved solids.

Comment 56

The treatment system is designed to treat 30 gpm for 8 hours per day. 30 gpm x 60 min/hr x 8 hrs/day x 350 days per year = 5,000,000 gals/yr. The wall to stop contaminated water flow is 2100 feet long. If an area 300 feet wide is drained and the precipitation is 14 inches per year, the gallons per year that will drain are 300 feet x 2100 feet x 14/12 feet x 7.5 gals/cu ft = 5,500,000 gals/year. The capacity of the system is almost exactly equal to the water draining from the area 300 feet above the retaining wall. If a greater area must be drained or if the wall must be extended the system may have inadequate capacity.

Response to Comment 56

Your calculation of the expected flow at the french drain is a good theoretical method. However, you should note that of the 14" of precipitation falling on the 881 Hillside Area, much of this will runoff or be evaporated. Nevertheless, if additional capacity is required, it will be necessary to operate the system beyond 8 hours per day. The actual capacity of the system is 2 to 3 times what is estimated to be required.

Comment 57

The key problem with the proposed interim plan is that is must be regarded as temporary. Until the sources of the contamination in the burial ground surrounding building 881 are completely removed, the people drinking water downstream of the ground water flow (drawing water from Woman's Creek) are in danger of getting contaminated drinking water.

Response to Comment 57

The IM/IRA specifically protects downstream users of alluvial ground water or surface water of Woman Creek. The collection of the footing drain flow and the interception of the contaminated alluvial ground water by the french drain will provide positive cutoff of contaminant migration in these media. The IM/IRA will operate until ARARs are achieved for ground water and/or a final remedy is implemented.

Comment 58

On p. 2-25 dioctyl phthalate (DOP) is described as the most prominent volatile organic contaminant of the 881 Hillside. DOP is principally used to test HEPA filters. Does the presence of DOP annunciate the presence of spent HEPA filters grossly contaminated with plutonium? If it does, then the validity of the "Interim Remedial Action Plan" is called into question.

Response to Comment 58

The validity of the IM/IRA is based on our understanding of ground water chemistry and flow, and the effectiveness of the proposed treatment system. Bis(2-ethyl hexyl)phthalate is cited in the text as being prevalent in the soil. This is not the same as di-n-octyl phthalate which was rarely present in the soils at the 881 Hillside Area. Bis(2-ethyl hexyl)phthalate is a common plasticizer that is likely to be found wherever plastics have been used. We believe, although we have not proven this hypothesis, that bis(2-ethyl hexyl)phthalate is present in the soil samples because of handling the samples with plastic gloves. We have no reason to believe, based on historical information, that HEPA filters were disposed at the 881 Hillside Area. Also, the remedial investigation information does not indicate the presence of buried HEPA filters.

Comment 59

As near as I can tell, the plan estimates the expenditure of about $3 million in capitol funds in the next 1-1/2 year - about $2 million per year. We have heard estimates of about $1 billion to clean up the contamination at the Rocky Flats Plant. At the rate we are moving, 500 years is a good estimate of how long it will take.

Response to Comment 59

The 881 Hillside IM/IRA is only one of many parallel on-going activities that are pertinent to cleanup of the Rocky Flats Plant and that are included in the $1 billion figure. In fiscal year 1990, approximately $65 million dollars is budgeted for environmental restoration activities at the Rocky Flats Plant.

COMMENTOR: Gale Biggs, Ph.D., Rocky Flats Cleanup Commission

Comment 60

In the cleaning of the ground water, the various methods described do not include the possibility of plutonium emissions since the drilling has not detected significant quantities of this metal. However, this metal may not migrate with the ground water if it attaches itself to soil particulates. This could also account for the small amounts detected in the sampled water. When remedial activities start, the amount, pressure and chemical composition of the liquid passing through the soil as part of the in-situ cleaning process could capture the plutonium, bring it to the surface, and produce measurable quantities in the processed water. A design for accommodating this possibility needs to be included in the program. Otherwise the plutonium could be released into the atmosphere (perhaps undetected) since no provisions were made for its presence.

Response to Comment 60

Please see our response to comment 43.

Comment 61

The possibility exists that a source of air borne plutonium from the area is due to refloatation from the soil. It could be that some of this plutonium is from the 903 pad, however, the highest measurements are east and southeast of 881. Disruption of the ground for mitigation could release the plutonium contaminated soil into the air. There is no mention in the plan for mitigation of this possibility. A very thorough dust control plan needs to be established -even to the degree of enclosing the earth moving activities. Many techniques have been established for asbestos control to the environment; surely this plutonium remedial action could adopt some of these techniques.

Response to Comment 61

Please see our response to comment 6.

COMMENTOR: Bini Abbott

Comment 62

I have three main comments and first is on your inaccurate measuring of distances from Rocky Flats to the neighboring communities. In the first place, on page 2-5, you're talking about surround land use and you state that the nearest educational facility is the Sierra Elementary School, which is six miles southeast of Rocky Flats Plant. If you look at the map, Sierra School is the red dot way over here. That is not the nearest school. Sierra was built about 18 years ago. However, nine years ago Witt Elementary was built, which is about four miles, three and a half miles from the boundary of Rocky Flats. Standley Lake High School is closer. Lucas Elementary was just built. Moore Junior High was built in 1980 and is also closer to Rocky Flats.

I also feel that you should not measure from the center of the Rocky Flats Plant any more than you would measure from the center of a beehive that is a half-mile by a half-mile, and then say the only danger is coming from the very center of the beehive. You need to, I think, measure from the Rocky Flats boundary when you're stating what is close. We live way closer than any of your maps show.

On that same page, page 2-5, you talk about some of the plants that are near Rocky Flats and you have omitted floral products. which has had two fires and produced a lot of problems, also. Then your bottom paragraph is ridiculous in my estimation. You're talking about agricultural statistics in 1976. Why would we care how many pigs and so on there were in the 1976 area? You could get updated information.

You also have a map, which is Figure 2-3, but not a page number, and it's talking about land use in the vicinity of Rocky Flats Plant. It was taken after a Rockwell International map done in 1986. Who knows what they took their map from, maybe something done prior to then. It is absolutely inaccurate on where there's industry, where there are housing area, and it should be updated.

How can we have faith in your credibility when you can't even put the background information down accurately? I'm aware that the chemists and so on who are doing the other reports did not do this part, but this is sloppy and should not be left that way.

Response to Comment 62

Thank you for your comments. We have updated this information as indicated in our response to comment 11.

COMMENTOR: Barb Moore

Comment 63

I have just a few objections to the remedial action plan. I have a problem with that there is no provision for extracting plutonium from the water. I understand that now that has not shown up, but what is going to happen if it does show up? Do we have a plan for that? I think it is -- should be planned for. I think it is likely that plutonium could show up with the amounts of plutonium that have been released on Hillside 881. I think that should be planned for.

Response to Comment 63

Please see our response to comment 43.

Comment 64

I'd like to know how the cleanup of the cleanup operations are going to be handled. Are the French Drains and all this piping going to be left in place afterwards, or is it going to be cleaned up? And if it's going to be cleaned up, how is that going to happen?

Response to Comment 64

Please see our response to comment 30.

Comment 65

And what if the water does not prove to be safe that you are extracting? Do we have facilities to store this water? If so, where is that going to be stored? I understand that we are going to reach our capacity in the springtime. This cleanup operation isn't happening for another year. Where are we going to store this extracted waste and the water should it become necessary?

Response to Comment 65

We do not understand your reference to reaching storage capacity in the springtime but believe you may be confusing this with other Rocky Flats Plant waste storage issues not connected with this action. The design of the IM/IRA calls for two effluent tanks each with one week of storage capacity. Furthermore, the capacity of the treatment system is 2 -3 times the expected influent flow. In consideration of this treatment and storage capacity, we feel it is reasonable that any operational difficulties encountered with the treatment plant can be corrected in sufficient time such that discharge of contaminated water is avoided. In addition, a carbon "polishing" system may be installed if there are any operational difficulties with the UV/Peroxide system. Ground water will not be collected from the french drain and Building 881 footing drain until after startup testing operations are performed and the treatment system is shown to be operating according to specification. In the meantime, we note that organic contaminants are migrating very slowly in the ground water, and the footing drain discharge may contain very low concentrations of organics (recent results show PCE at only 8 ppb). Organic contaminants have never been detected in Pond C-2 where the footing drain discharge ultimately flows. Furthermore, Pond C-2 is monitored before discharge to assure the water quality is acceptable as dictated by the plants NPDES permit. In light of this, you should not be concerned about contamination being released off the Rooky Flats Plant property before the interim action construction is completed.

Comment 66

I understand there's, you know, from what I've been able to figure, over 50,000 square feet of contaminated land area on Hillside 881. I have a real problem with heavy machinery driving over this area and resuspending the particles into the air. During past cleanup operations air monitoring levels, plutonium levels have reached the state standards and, at times, have exceeded the state standards. What air monitoring is going to happen during the cleanup and at what point will cleanup stop should we exceed those air monitoring standards?

Response to Comment 66

Please see our response to comment 6.

Comment 67

I am confused that this plan has come about, in my eyes, fairly rapidly. In last February, 1989, Troy Wade, in testimony before a Senate hearing, was telling us that Rocky Flats could never be - may never be cleaned up. When Senator Tim Wirth asked him about the ground water contamination, Wade acknowledged that the technology does not exist for cleaning up the ground water or stopping the contamination. I want to know, you know, what drastic measures have occurred since February, 1989, to make this now a safe and feasible plan?

Response to Comment 67

We do not know what information Mr. Wade was basing his comments on. However, we are certain that the proposed IM/IRA will be effective in significantly reducing contaminant migration in the alluvial ground water system at the 881 Hillside Area, and in removing the contaminants from the extracted ground water. DOE also recognizes that the public must be reasonably convinced of the feasibility and legitimacy of this action.

Comment 68

At the last meeting here at Front Range Community College, I may have misinterpreted the comments, but the way I interpret it is that because of strong public objection, may delay the cleanup of the ground water on Hillside 881. would be the fault of the people who drafted the plan. We need to have a plan that is acceptable to the public and that will not endanger our health. I think our priorities should lie with the people and the public safety, and not with how many dollars this is going to cost us to clean this up.

Response to Comment 68

Strong public opposition to the plan would delay the IM/IRA. However, DOE is committed to expediting the IM/IRA according to a plan that is first and foremost protective of the public health and environment. We feel that the plan that has been reviewed by the public and this responsiveness summary demonstrates that commitment.

COMMENTOR: Mel Wright

Comment 69

First, comments against Rockwell--not against Rockwell. I appreciate you trying to clean it up. Leaving that stuff there is nothing but a time bomb and it's going to get us. Any attempt to do something is better than sitting on our hands. However, after going to the hazardous waste seminar Monday and Tuesday, the manufacturer of this ozone peroxide cleanup says they're having a lot of problems it won't touch, carbon tetrachloride, and it won't touch some of the unsaturated chlorides. It works extremely well on trichloroethylene and the some chlorinated solvents, but at least it's an attempt. At least it's something that's going to remove the great majority of the contaminants as I see from the list. Just realize it will not work on carbon tet at all, and probably will not work on the tetrachloroethylene, so you're probably going to have to do some air-stripping or carbon filtration, something along that line as an after- though. In other words, you don't want to saturate your carbon filters, so you basically will need an in-series type thing.

Response to Comment 69

The UV/Peroxide equipment specification calls for the reduction of the expected influent concentrations of both carbon tetrachloride and tetrachloroethylene to achieve the effluent standards, i.e., the vendor of the equipment must guarantee the equipment will meet these performance criteria. Furthermore, one vendor, Peroxidation Systems, notes that there is a substantial body of evidence that indicates saturated compounds can be treated with the UV/peroxidation process. The evidence indicates that longer residence times are required to treat saturated organics relative to unsaturated organics. Data presented in 1987 (Hager, Loven, and Giggy, Chemical Oxidation Destruction of Organic Contaminants in Groundwater HMCRI National Conference and Exhibition, November, 1987), indicates that 1,200 mg/l of carbon tetrachloride was reduced to 0.3 mg/l with a reaction time of 30 minutes. The Hager paper also noted that 705 Fg/l of tetrachloroethylene was reduced to non-detectable limits in just 2.5 minutes. The longer residence time required for treating saturated compounds translates into higher operating costs but no reduction in protection of human health and safety.

Comment 70

One other thing, I really didn't get to see your total diagram, but at one point your treated water was going to come out. You were going to test it. If it failed the test you are going to pump it back in, in line, and in some ways it almost sounds like dilution. I'd rather see you set up another second set of either the ozone treatment or some more carbon filters. Possibility put some secondary backup systems; in other words, if you have breakthrough, don't resend it back through kind of as a dilution scheme, but go on down the line.

Response to Comment 70

Indeed the influent would be diluted by recycling the effluent through the treatment system. However, it is impossible for this effluent to dilute the influent to meet ARARs without further treatment. Nevertheless, your comment is well taken. In order to minimize any operational difficulties, a carbon "polishing" system may be installed downstream of the ion exchange system. This redundancy would further facilitate smooth operation of the facility.

Comment 71

I'm just going to keep it at that for your comments, and some comments to my concerned citizens. First, even though this is an interim cleanup. hopefully you're going to follow the OSHA rules. 1910.20, it very well defines exactly what these guys have to do, how they monitor, what kind of equipment the people have to wear, what kind of dust they can stir up, and all you have to do is you can call up OSHA and ask for 1910.20. It'll tell you everything you want to know about what these

guys have to do. Hopefully, You will follow it.

Okay. Even though it's an interim cleanup, by law, a lot of times if you're doing interim, EPA allows you to bypass or not follow a lot of the rules that a Super Fund site would, or a normal cleanup facility would. Hopefully you're going to follow 1910.20, and I highly suggest everybody in the audience call up OSHA and ask for that paper, and it will answer--there was about three people who had questions about that. It will answer all your questions. All you've got to do is ask these guys are they going to follow that.

Let's see, the second thing, I'm concerned that it seems like the major concern of the audience is, "Let's don't do anything. We'll just leave it there." My complaint is, we've put it there. It's there in concentrated form. Let's get rid of it. You guys are worrying about stirring up a little dust. What do you think wind storms do? What do you think--where does the rainwater go? It washes off the property. You guys are probably more contaminated by what the wind blows up, what the rainwater washes off than these guys will ever stir up. Hopefully they will reduce it, you know, put up--hopefully, you'll take this one guy's comments, maybe put a dome over it, a simple, cheap dome. You'll water it down, do everything possible to reduce it, but you know and I know as an environmental chemist these guys are more at risk from what the environment is throwing out to them than you guys will stir up in the cleanup.

We've got to start trying to remove something. If you leave it there, it's a time bomb and it will get you. So my comment is, first, I appreciate that we're going to try something, work it out, realizing it is an experiment, but hopefully intelligence allows some thought to go into it. You work at it you improve it but at least do something.

Again, send away for the information and let's try and work together. I want to protect my life and my environment and the way to do it is to help people solve the problem and understand it. So send away for, the literature and go from there. Remember the ozone thing doesn't work on the carbon tet, and that's it. Thank you very much.

Response to Comment 71

We fully intend to comply with OSHA regulations. We appreciate your support on this project.

COMMENTOR: Mr. Reynolds

Comment 72

My concern is--one is resuspension and on-site and off-site Hill 881, as well as some of the areas that I've been told about that have a fairly high radioactivity just east of Indiana. Is there any particular reason why we couldn't be using some of the adhesive sprayed currently in some of the core sample sites or some of the core sites to keep the resuspension down in this area, which is only about, what, a mile and a half, two miles from a major high school that was just fairly recently built and a very large population in that area. Is there any particular reason why we couldn't be putting something down to keep that down? I understand that they're taking measures to, I've been told, plow under as well as re-vegetate, but some of this adhesive material that I've read about that they've been spraying in these areas for the core sampling have been used, and why not use it there?

Response to Comment 72

The plowing and revegetating activities refer to the soil remediation being conducted just east of Indiana Street. We appreciate your concern, however, that project is not part of this interim action and is therefore outside the scope of the plan and this response to comments. With regard to the 881 Hillside Area, please see our response to comment 6.

Comment 73

Also, in the--this may not--I may be out of order in asking this questions, but with the recent accident yesterday of the aircraft accident and previous to that, the air show which we had a large number of aircraft, is there--especially now with the--all these boxcars out there and the high potential of--or high exposure I'd suggest that we've had probably prior to the--and I think you call it the EPA's evaluation of accidents. I don't know if that was considered at that time; that is, all the boxcars we have out there now. But is there any consideration in the remedial time of looking at redirecting traffic or--and I don't know how you do that with a major airport right next to it, but on the other hand, is that being considered? And if it's not, I'd sure appreciate it if it would be.

Response to Comment 73

We appreciate your concern regarding the potential for these accidents but we note that the air space above the Rocky Flats Plant is already restricted.

WRITTEN COMMENTS: Annette Barnard, Manager of Water Quality, City of Thornton

Comment 74

The City of Thornton would like to thank the Colorado Department of Health and the Department of Energy (DOE) for the opportunity to submit comments on the Proposed Interim Measures/Interim Remedial Action Plan and Decision Document for the 881 Hillside Area. The City believes that the option selected by Rockwell International, the UV/peroxide and ion exchange treatment system, is the appropriate solution because it accomplishes complete destruction of the contaminants without formation of additional hazardous wastes or other byproducts. In addition, we feel that the French Drain collection system is an excellent choice for collection of the groundwater.

Response to Comment 74

We appreciate your Support.

Comment 75

The French Drain should be extended on the east end to include coverage of Solid Waste Management Unit (SWMU) 119.2 which was used for barrel storage.

Response to Comment 75

As discussed on page 6-1, second paragraph, if the bedrock lithology verification program indicates the presence of saturated colluvial material downgradient of SWMU 119.2, the french drain will be extended to collect ground water in this area.

Comment 76

A detailed operating procedure should be developed to establish an appropriate water quality monitoring system and to define treatment criteria and standards.

Response to Comment 76

Treatment criteria and standards are defined in the plan. An Operation and Maintenance manual will be prepared for the facility which will outline the monitoring requirements. This manual will be available for public review before the treatment system is operational.

Comment 77

In the interest of public relations and public safety a study should be funded to determine an appropriate collection system to take Pond C-2 water and runoff from the site to prevent contamination of the drinking water supply for the Cities of Thornton, Northglenn and Westminster.

Response to Comment 77

DOE is investigating alternatives to discharge of Plant runoff via Pond C-2 to the Woman Creek drainage. However, we would like to point out that all discharges from Pond C-2 will be monitored in accordance with the Plant's National Pollutant Discharge Elimination System Permit. Water that does not meet the surface water standards for Woman Creek will not be discharged. Please see our response to comment 1.

COMMENT 78

A permanent system should be developed to intercept flow from Woman Creek and divert it around Standley Lake to protect public health from contamination which may not be known or apparent at this time.

Response to Comment 78

Please see our responses to comments 1 and 77.

Comment 79

Section 2.1.6.2. In light of the data validation study performed by Argonne National Laboratory, conservative analyses of the soils data must be summarized for inclusion within this report. Specifically, until further field work is conducted at the 881 Hillside to verify or refute the presence of both volatile and semi-volatile constituents, the previous soils evaluation must be presented. More than 3 of the 23 boreholes were contaminated and the soils were contaminated with more than PCE, TCE and 1,1,1-TCA.

Response to Comment 79

The text will be revised in the final plan to simply summarize the data and discuss it's limitations. References to risk will be deleted.

Comment 80

Section 2.1.6.3. It should be stated that recent valid sampling of the ponds within Woman Creek indicate that there are no VOCs present.

Response to Comment 80

This addition will be made in the final plan.

Comment 81

Section 3.2. The schedule presented must reflect the extension of the public comment period. The procurement dates for the Ion Exchange System seem to be in error.

Response to Comment 81

This is a typographical error that will be corrected in the final plan. Also, the extension of the public comment period, and the response to public comments and finalization of the plan will be reflected in the new schedule. This will alter the overall schedule for construction and startup of the IM/IRA. The revised schedule is provided in Section 3 of the final plan.

Comment 82

Section 3.3. The chemical specific ARAR for gross beta is 4 mrem/yr (a National Interim Primary Drinking Water Regulation) or 50 pCi/l (a SDWA MCL), whichever is more stringent.

Response to Comment 82

Actually, 50 pCi/l is simply a criterion above which it is necessary to analyze specific man-made beta emitting isotopes to assess if the 4 mrem/yr standard is exceeded. The change will be made in the final plan.

Comment 83

Section 3.3.1. The Chemical Specific ARAR for antimony is exceeded. It appears that the Chemical Specific ARAR for nitrate is exceeded. The RCRA Subpart F standard for 1.2 Dichloroethane is 5 ppb. This is a final MCL.

Response to Comment 83

Antimony and nitrate do exceed ARAR. These were typographical errors that will be corrected in the final plan. As noted in Table 3-2.1, 5 ppb is the RCRA Subpart F, CDH ground water, CDH surface water, and MCL standard.

Comment 84

Section 4.3. Table 4-1 presents the basis for design of the 881 Hillside treatment technology as based on a flow weighted average of the footing drain and alluvial groundwater collected by the french drain. Is the source well included in the design basis for the treatment technology?

Response to Comment 84

The source well has not been included because it would represent double accounting of contamination. Well 9-74 and 43-87 are included in the computation of the expected ground water chemistry of alluvial ground water collected by the french drain. Also, the source well will be pumped and the discharge treated prior to the french drain being placed into service. By the time the french drain is in service, it is expected that the source well will have lower contaminant concentrations and produce a low steady flow (estimated below 1 gpm). This should not significantly affect the influent chemical characteristics, at least relative to the computed influent characteristics.

Comment 85

Section 4.5.1.1. Figure 4-9 shows the 6" perforated pipe placed above the drain sump. The top of the sump shall be located approximately two feet below the interface of the 10^{-6} cm/s hydraulic conductivity bedrock and bedrock or alluvial soils having greater than 10^{-6} cm/sec hydraulic conductivity. The perforated pipe should be placed so that liquid cannot accumulate above the level of the lined sump, i.e. the top of the pipe should be placed below the top of the sump.

Response to Comment 85

We agree, and the changes will be made in the final plan.

Comment 86

Section 4.5.3.2. The last paragraph states this action is a removal. This action is an IRA. Delete this statement.

Response to Comment 86

This is a typographical error resulting from the original draft plan referring to the IM/IRA as a removal action. The terminology will be deleted.

Comment 87

Section 6.0. As the soil boring program is scheduled for mid-October through mid-January, the driest time of the year, placement and frequent monitoring of permanent piezometers downgradient of SWMU 119.2 is recommended to evaluate the saturated or unsaturated conditions downgradient of the site.

Response to Comment 87

The schedule for the soil boring program has been moved back for technical and administrative reasons. It will now be conducted in the late winter/early spring.

Comment 88

It should be noted that the 15 feet into bedrock calculation for interception of dipping sandstones is dependent on the relative elevation of the top of bedrock. If the adjacent western borehole bedrock elevation is lower than the elevation of bedrock in the borehole being drilled, 15 foot penetration into bedrock may not intercept a dipping sandstone identified in the adjacent borehole.

Response to Comment 88

Given the 15 foot depth was estimated based on a dip of 7°, and the current estimate of dip is 1° to 2°, intercepting potentially subcropping sandstones with a penetration depth of 15 feet is almost certain regardless of differences in the top of bedrock elevations.

Comment 89

It might be prudent to maintain and archive the bedrock cores for potential future submittal for laboratory permeability testing. This contingency could be used if the in-situ permeability testing proposed does not generate acceptable information.

Response to Comment 89

The suggestion is a good one and will be considered.

D. REMAINING CONCERNS

All issues pertaining to the proposed interim action have been resolved by this Responsiveness Summary or the final interim action plan. The only issue that remains unresolved is the mixed public opinion regarding routing Woman Creek flow around Standley Lake. The issue, however, is not pertinent to the 881 Hillside Area interim action.

ATTACHMENT

COMMUNITY RELATIONS WORK PLAN

COMMUNITY RELATIONS

WORK PLAN

SUBMITTED TO EPA, REGION VIII

by

The Department of Energy, Rocky Flats Office

October 28, 1989

The Comprehensive Environmental Response, Compensation and Liability Act (CERCLA) requires that a Community Relations Plan be developed if a facility is placed on the Environmental Protection Agency's (EPA) National Priorities List (NPL - Superfund). In September of 1989, The Rocky Flats Plant, owned by the Department of Energy, was placed on the NPL by the EPA. Once a site is added to the NPL, a Community Relations Plan must be prepared for removals (cleanup sites) lasting longer than 45 calendar days. The following is the proposed work plan for the Rocky Flats Community Relations Plan and is divided accordingly:

1. Content:

- Purpose of the Community Relations Plan
- Historical Geographical and Technical Site History
- Community Background
- Key Community Concerns (derived from Interviews)
- History of Community Involvement (derived from media clips)
- Community Relations Strategies (required and suggested by EPA's Community Relations in Superfund: A Handbook)
- Schedule of Community Relations Activities
- Procedure for Administrative Record and Locations
- Repository Information (content and locations)
- Remodel Investigations/Feasibility Studies (RI/FS) Process and General Remediation Information and Procedures
- Required Public Comment Procedures and Time Periods
- Mailing List of Key Contacts and Interested Parties
- Information on Determining Location of Public Meetings, News Conferences, Presentations and Workshops

2. Goals and Objectives:

- Community Relations Plan (CRP) will provide in document form accurate, timely, and understandable information, and steps the public can take to participate in decisions regarding cleanup activities at the Rocky Flats Plant. The CRP win allow the public the opportunity to learn about the Site, the Superfund program and to provide input on technical decisions during the RI/FS process prior to remedial field work.

- The CRP will continuously inform the public of planned and/or ongoing remedial cleanup activities at the Plant. Throughout all of the cleanup processes it will serve as a blueprint outlining the timing of those

activities and the public's role.

The CRP will establish a positive working relationship among the public, the Department of Energy (DOE), the EPA, the Colorado Department of Health (CDH), and Plant personnel. This communication will focus on and resolve any past conflict and avoid any future miscommunications.

3. The Design of the CRP:

The design of the CRP will follow the guidance and regulations provided in EPA's Community Relations in Superfund: A Handbook, the DOE, and CDH regulations.

The design of the CRP will include input by the public through surveys and extensive community Interviews conducted by the CRP Coordinator and staff, Plant public information staff, and Plant technical staff (when appropriate).

The proposed final draft of the CRP will be developed by the CRP Coordinator and reviewed by the operating contractor, DOE, EPA, and CDH personnel. After review of the document by these agencies the CRP will be subject to the required public comment period.

Following guidelines established by applicable regulatory agencies for community relations activities related to cleanup and remedial investigations, the CRP will also be subject to continuous revisions for specific sites undergoing remedial action at the Plant Under these guidelines, the CRP will be perceived as a "living document" and tho public will be provided the opportunity for input throughout the process.

4. Community Concerns:

Prior to the writing of the proposed CRP, extensive interviews will be conducted. Citizens will have the opportunity to participate through public meetings, face-to-face interviews, informal group meetings and workshops. Groups to be targeted for interviews are discussed in Section 6. Based on existing historical information, initial concerns to be explored, but not limited to, are: real or perceived health threats from the production at the plant; environmental concerns; levels of public technical knowledge; economic issues such as property values, income tax bases and revenues; and the credibility of involved government agencies.

The goal of community involvement In the CRP will be to include and Inform the public through accurate information and communication regarding cleanup activities, and to develop trust and respect between the surrounding communities, the operating contractor, and the appropriate agencies.

The strategy to be used for gathering information on current community concerns through the interviewing process will include:

< Development of an interviewing team(s) who win be knowledgeable, empathetic, non-threatening and know site background and community history.

< Prior to interviewing, the town will determine a cross-section of the public to interview. These groups and persons will be derived from mailing lists and correspondence files provided by the DOE, EPA, CDH, and the Plant. it is anticipated that once the interviewing process begins, interviewees will suggest other groups or persons who may wish to provide input.

< The interviewing teams(s) will divide the list of interviewees and, based on the team's expertise, determine who will target certain groups and/or areas.

< Times and locations for interviews will be arranged at least seven to tan days prior to the interview. Confirmation telephone calls will be made.

< Prior to going into the field, the interview team(s) will outline the purpose of the CRP, organize, questions, and practice diplomatic responses to difficult questions.

The media will be contacted and briefed on the development of the CRP by personnel selected by the operating contractor. This brifing will continue throughout the CRP process, maintaining consistency and clarity at all times.

The media will serve as a successful tool for the CRP as the interviewing team(s) and appropriate agency personnel will concentrate on building good media relations through open communication, updated information, and easy accessibility.

5. Activities:

Activities included in the CRP will be determined by the EPA guidelines as set forth in the Community Relations in Superfund: A Handbook it is anticipated that additional activities will result from community interviews; however, history shows that the following activities will occur:

Maintaining open lines of communication with interested parties. The CRP Coordinator and appropriate agency personnel will continue to make themselves available to talk to interested persons about environmental issues and concerns. This policy of open communication will continue during the entire CRP process and will include follow-up. The CRP Coordinator and agency pesonnel will also participate in meetings to keep the public informed about technical and community relations activities.

Fact sheets, informational updates, and technical summaries will be

prepared, kept current, and made available to the public through the Plant Public Information Department and repositories on a regular basis. A thorough mailing and contact list will be established and maintained. These lists will be kept current and expanded as remedial projects progress to provide information to all interested parties.

News releases will be prepared for the local media. Because the local media are the source of information for many of the people queried, news releases will be provided to newspapers, television, and radio stations to announce significant findings and/or milestones and to notify the community of public meetings.

Administrative records will be kept on site and project information and will be maintained at information repositories. The CRP Coordinator or his/her designee will ensure accuracy by keeping the information up to date at the repositories. The information in the administrative record will focus an remodel cleanup activities at the Plant and will be available for public review and comment. Although at least four exist additional repositories may be established.

Informal and formal public meetings with interested groups and area residents will be hold with required advanced notice followed by a required comment period. These meetings will provide information on specific projects at the Plant, and appropriate agency personnel will respond to concerns, including those of a technical nature. Public meetings will be scheduled in relation to each remedial cleanup project. Some of these meetings may take the farm of an “open house” featuring experts In a variety of fields.

The opportunity for public comment will be welcomed. Interested groups and citizens will be encouraged to comment verbally or in written form an remedial investigations, feasibility studies, and other major reports as they relate to specific cleanup projects. Sufficient time is required for advanced notice of the comment periods to allow adequate time for comment. A minimum of 60 days will be allowed for public comment on preferred alternatives for remedial action at the Plant.

As the CRP will address CERCLA and Resource Conservation and Recovery Act (RCRA) issues, the CRP Coordinator and Plant personnel will work closely and cooperatively with DOE, EPA and CDH.

Responsiveness summaries will be prepared which will summarize significant public comments and concerns raised before and during the public comment period on draft feasibility studies. The Responsiveness Summary is required as part of the Record of Decision (ROD) and Corrective Action Decision (CAD) for each remedial cleanup site. It will document how citizen comments were considered throughout the decision-making process.

Newspaper notices will be published to inform the public that the ROD

prepared, kept current, and made available to the public through the Plant Public Information Department and repositories on a regular basis. A thorough mailing and contact list will be established and maintained. These lists will be kept current and expanded as remedial projects progress to provide information to all interested parties.

News releases will be prepared for the local media. Because the local media are the source of information for many of the people queried, new releases will be provided to newspapers, television, and radio stations to announce significant findings and/or milestones and to notify the community of public meetings.

Administrative records will be kept on site and project information and will be maintained at information repositories. The CRP Coordinator or designee will ensure accuracy by keeping the information up to date at the repositories.

The information in the administrative record will focus on remedial cleanup activities at the Plant and will be available for pubic review and comment Although at least four exist additional repositories may be established.

Informal and formal public meetings with interested groups and area residents will be hold with required advanced notice followed by a required comment period. These meetings will provide information on specific projects at the Plant, and appropriate agency personnel will respond to concerns, including those of a technical nature Public meetings will be scheduled In relation to each remedial cleanup project. Some of the meetings may take the form of an “open house” featuring experts in a variety of fields.

The opportunity for public comment will be welcomed. interested groups and citizens will be encouraged to comment verbally or in written form on remedial Investigations, feasibility studies, and other major reports as they relate to specific cleanup projects. Sufficient time is required for advanced notice of the comment periods to allow adequate time for comment. A minimum of 60 days will be allowed for public comment on preferred alternatives for remedial action at the Plant.

As the CRP will address CERCLA and Resource Conservation and Recovery Act (RCRA) Issues, the CRP Coordinator and Plant personnel will work closely and cooperatively with DOE, EPA and CDH.

Responsiveness summaries will be prepared which will summarize significant public comments and concerns raised before and during the public comment period an draft feasibility studios. The Responsiveness Summary is required as part of the Record of Decision (ROD) and Corrective Action Decision (CAD) for each remedial cleanup site. It will document how citizen comments were considered throughout the decision-making process.

or CAD is signed and of the availability of the final remedial action plan selected. These notices will be placed in major local newspapers of general circulation after the remedy has been selected and the ROD or CAD is signed, but before commencement of any remedial activities.

In summary, open communication with concerned citizens and groups, regular public meetings and open houses, informal group meetings, and public comment periods an major reports are the primary activities of the CRP for the Plant.

6. Groups Identified to Interview for Comments to be included in the CRP:

Elected and/or appointed officials:

< Governor's Office

< Congressional delegation

< Mayors, City Managers, select Council members and Legislators of the surrounding area

Educators

Rocky Flats Environmental Monitoring Council

Chambers of Commerce in surrounding area

Civic groups in surrounding Plant area

Environmental groups

Rocky Flats Cleanup Commission

Church groups

Industrial groups

Area reporters

Union employees

Local landowners

Directors of area homeowners' associations

Area agricultural associations

Area editorial boards

It is anticipated that this list of groups will be expanded once the interviewing process begins.

7. Project Schedule:

A CRP will be prepared according to the following schedules:

Early Start	Early Finish	Activity
11/1/89	11/14/89	Community Survey Plan (CSP) scoping with EPA and CDH
11/15/89	12/15/89	Draft Community Survey Plan (CSP)
12/18/89	1/23/90	RFP review draft CSP. Resolve and finalize (CSP)
1/24/90	2/21/90	EPA and CDH review CSP
2/22/90	3/22/90	Finalize CSP
3/23/90	5/21/90	Implement CSP (Perform survey/interviews CSP)
5/22/90	7/19/90	Review survey findings and prepare CRP draft
7/20/90	8/17/90	RFP review draft CRP
8/20/90	9/18/90	Resolve comment and finalize draft (CRP)
9/19/90	10/17/90	EPA/CDH review (CRP)
10/18/90	12/18/90	Resolve Issues and finalize CRP
12/19/90	2/6/91	Public comment period - CRP
2/7/91	4/5/91	Public comment response (Responsiveness Summary)
4/8/91	5/6/91	EPA/CDH final review Response Summary (CRP)

ROCKY FLATS PLANT (USDOE)

Site Information:

Site Name: ROCKY FLATS PLANT (USDOE)
Address: GOLDEN, CO

EPA ID: CO7890010526
EPA Region: 08

Record of Decision (ROD):

ROD Date: 01/25/1991
Operable Unit: 02
ROD ID: EPA/ROD/R08-91/054

Media: SURFACE WATER

Contaminant: VOCS, CARBON TETRACHLORIDE, PCE, TCE, RADIOACTIVE MATERIALS

Abstract: THE ROCKY FLATS PLANT (USDOE) SITE IS PART OF THE 6,550-ACRE NUCLEAR WEAPONS RESEARCH, DEVELOPMENT, PRODUCTION, AND PLUTONIUM PROCESSING COMPLEX IN JEFFERSON COUNTY, COLORADO. THE PLANT IS COMPOSED OF THE 450-ACRE ROCKY FLATS PLANT (RFP) SECURITY AREA AND THE REMAINING BUFFER AREA. LAND USE IN THE AREA IS PREDOMINANTLY RURAL AND AGRICULTURAL WITH SEVERAL NEW RESIDENTIAL AREAS UNDER DEVELOPMENT. THIS RECORD OF DECISION (ROD) ADDRESSES OPERABLE UNIT 2 (OU2), WHICH INCLUDES THE 903 PAD AND LIP, AND MOUND AND EAST TRENCHES AREAS, WHICH ARE LOCATED SOUTHEAST OF THE RFP. THE SITE LIES WITHIN THE SOUTH WALNUT CREEK AND WOMAN CREEK DRAINAGE BASINS. THE SOUTH WALNUT CREEK BASIN AND WOMAN CREEK SURFACE WATER SERVE AS A SOURCE OF DRINKING WATER. SINCE 1951, THE DEPARTMENT OF ENERGY (DOE) USED THE SITE FOR MANUFACTURING COMPONENTS FOR NUCLEAR WEAPONS, PROCESSING PLUTONIUM, AND FABRICATING, MACHINING, AND ASSEMBLING COMPONENTS FROM METALS. A NUMBER OF PAST ONSITE STORAGE AND DISPOSAL ACTIVITIES ARE POTENTIAL SOURCES OF

CONTAMINATION. FROM 1958 TO 1967, DRUMS CONTAINING RADIOACTIVELY CONTAMINATED OILS AND SOLVENTS WERE STORED ONSITE, WITH SOME OF THE DRUMS CORRODING AND LEAKING APPROXIMATELY 5,000 GALLONS OF LIQUID INTO THE SOIL. DURING A CLEAN-UP AND REMOVAL EFFORT OF THE DRUM STORAGE AREA, WINDS DISTRIBUTED PLUTONIUM TO THE SOUTH AND EAST. PRIOR TO 1968, SANITARY SEWAGE SLUDGE AND FLATTENED DRUMS CONTAMINATED WITH URANIUM AND PLUTONIUM WERE DISPOSED OF IN ONSITE TRENCHES, AND DRUMS OF URANIUM-CONTAMINATED OIL WERE BURNED IN ONSITE PITS. DURING THE 1950'S AND 1960'S, REACTIVE METALS INCLUDING LITHIUM, AND SOLVENTS WERE DESTROYED ONSITE. IN ADDITION, VARIOUS BOTTLED GASES WERE DETOXIFIED ONSITE BETWEEN 1982 AND 1983. CURRENT WASTE HANDLING PRACTICES INVOLVE ONSITE AND OFFSITE RECYCLING OF HAZARDOUS MATERIALS, AND OFFSITE DISPOSAL OF SOLID RADIOACTIVE MATERIALS AT ANOTHER DOE FACILITY. DOE HAS CONDUCTED A NUMBER OF INVESTIGATIONS THAT REVEALED VOCS, METALS, AND RADIONUCLIDES ABOVE BACKGROUND LEVELS IN SOIL, SEDIMENT, GROUND WATER, AND SURFACE WATER. A 1969 CLEAN-UP ACTION ATTEMPTED TO REMOVE CORRODED AND LEAKING DRUMS OF RADIOACTIVE WASTE FROM AN ONSITE AREA, REMOVE CONTAMINATED SOIL, AND CAP THE SOIL. IN 1970, APPROXIMATELY 1,405 DRUMS CONTAINING RADIOACTIVE WASTE WERE REMOVED AND DISPOSED OF OFFSITE. A 1990 RECORD OF DECISION (ROD) ADDRESSED CONTAMINATED GROUND WATER. THIS ROD PROVIDES AN INTERIM REMEDY FOR CONTAMINATED SOUTH WALNUT CREEK BASIN SURFACE WATERS AS PART OF OU2. THE PRIMARY CONTAMINANTS OF CONCERN AFFECTING THE SURFACE WATER ARE VOCS INCLUDING CARBON TETRACHLORIDE, PCE, AND TCE; AND RADIOACTIVE MATERIALS.

THE SELECTED REMEDIAL ACTION FOR THIS INTERIM REMEDY INCLUDES COLLECTING SURFACE WATER USING DIVERSION; TREATING SURFACE WATER USING PRECIPITATION AND CROSS-FLOW MEMBRANE FILTRATION TO REMOVE SUSPENDED SOLIDS AND RADIONUCLIDES, FOLLOWED BY LIQUID-PHASE ACTIVATED CARBON TO REMOVE ORGANIC CONTAMINANTS; DISCHARGING THE TREATED WATER

ONSITE TO SOUTH WALNUT CREEK; CONDUCTING TREATABILITY STUDIES; AND MONITORING SURFACE WATER. THE ESTIMATED PRESENT WORTH COST FOR THIS REMEDIAL ACTION IS $4,850,600, WHICH INCLUDES AN ANNUAL O&M COST OF $361,600.

PERFORMANCE STANDARDS OR GOALS;
CHEMICAL-SPECIFIC SURFACE WATER CLEAN-UP GOALS WILL BE BASED ON THE MOST STRINGENT OF STATE AND FEDERAL ALLOWABLE LIMITS AS SET FORTH IN ARARS, AND WILL APPLY TO THE FINAL REMEDIAL ACTION.

Remedy: THE OVERALL OBJECTIVE OF THE SOUTH WALNUT CREEK BASIN IM/IRA AT OU 2 IS THE MITIGATION OF DOWNGRADIENT CONTAMINANT MIGRATION WITHIN SURFACE WATER BY MEANS OF THE COLLECTION AND TREATMENT OF CONTAMINATED SURFACE WATER TO ACHIEVE, TO THE EXTENT PRACTICABLE, ARARS (SEE SECTION 3.3). ARARS ARE USED IN DEFINING THE REMEDIATION GOALS FOR THE INTERIM ACTION. BASED ON THE MEETINGS BETWEEN DOE, CDH, AND EPA DURING FEBRUARY AND MARCH 1990, AND COMMENTS RECEIVED DURING THE PUBLIC COMMENT PERIOD, DOE IS PROPOSING THIS IM/IRA PLAN WHICH SPECIFIES POINT SOURCE LOCATIONS FOR THE COLLECTION OF CONTAMINATED SURFACE WATER, AND PROVIDES FOR THE COLLECTION AND TREATMENT OF FLOWS EXCLUSIVE OF THOSE RESULTING FROM HIGH PRECIPITATION EVENTS. THE COLLECTION SYSTEMS ARE DENOTED CS-59, CS-61, AND CS-132. COLLECTED SURFACE WATER IS AUTOMATICALLY TRANSFERRED TO THE TREATMENT SYSTEM BY PIPELINE. FLOWS AT STATIONS SW-56, SW-60, SW-101, AND SW-133 WILL BE COLLECTED AT THE DOWNSTEAM STATION SW-61 BY A NEW SURFACE WATER DIVERSION WEIR AND PUMP STATION. THE WEIR WILL SERVE TO DIVERT UP TO 37.5 GPM (14 GPM AVERAGE ANNUAL WITHDRAWAL RATE) FROM THE DRAINAGE. CONTAMINATED SURFACE WATER WILL BE DIVERTED UPSTREAM OF THE WEIR INTO A 1,000-GALLON PRECAST CONCRETE SUMP PROVIDED WITH A SCREEN, WHERE LARGE DEBRIS IS SEPARATED FROM THE FLOW. THIS SCREEN WILL REQUIRE MANUAL CLEANING TO REMOVE DEBRIS. WATER WILL BE PUMPED FROM THE MANHOLE TO THE TREATMENT FACILITY. WHEN THE INFLOW INTO THE SUMP EXCEEDS THE PUMPING RATE, THE EXCESS FLOW WILL RETURN THROUGH OVERFLOW

PIPING TO THE DRAINAGE BELOW THE WEIR.

THE SEEP FLOW FROM SW-59 WILL BE ISOLATED FROM THE SOUTH WALNUT CREEK DRAINAGE AND COLLECTED SEPARATELY FROM CS-61 USING A 500-GALLON, PRECAST CONCRETE SUMP. THE SUMP AND INSTALLED PUMP WILL BE DESIGNED TO COLLECT AND TRANSFER THE DESIGN FLOW OF 4.5 GPM (1 GPM AVERAGE ANNUAL WITHDRAWAL RATE). FLOWS IN EXCESS OF 4.5 GPM WILL BE DISCHARGED TO SOUTH WALNUT CREEK, VIA AN OVERFLOW PIPE, TO THE DRAINAGE. THE OVERFLOW WILL ENTER SOUTH WALNUT CREEK UPGRADIENT OF CS-61 AND WILL EITHER BE COLLECTED BY OR ALLOWED TO PASS CS-61, DEPENDING ON WHETHER THE CREEK FLOW IS LESS THAN OR GREATER THAN THE 37.5 GPM DESIGN FLOW FOR CS-61. UPPER SOUTH WALNUT CREEK FLOW WILL BE COLLECTED AT SW-132 BY A NEW SURFACE WATER DIVERSION WEIR AND PUMP STATION. THE WEIR WILL SERVE TO DIVERT UP TO 18 GPM (5 GPM AVERAGE ANNUAL WITHDRAWAL RATE) FROM THE DRAINAGE. CONTAMINATED WATER WILL BE DIVERTED INTO A 1000-GALLON PRECAST CONCRETE SUMP. FLOW IN EXCESS OF THE DESIGN FLOW (18 GPM) WILL BE PERMITTED TO OVERFLOW THE DIVERSION WEIR.

THE SURFACE WATER COLLECTED WILL BE TREATED USING CROSS-FLOW MEMBRANE FILTRATION (FOR SUSPENDED SOLIDS AND RADIONUCLIDE REMOVAL), FOLLOWED BY LIQUID-PHASE ACTIVATED CARBON (FOR ORGANICS REMOVAL) (FIGURE 6-1). THE RESPECTIVE UNITS AND APPURTENANCES WILL BE HOUSED IN THREE 48-FOOT TRAILERS TO PROTECT WEATHER- OR TEMPERATURE-SENSITIVE COMPONENTS. FIRE PROTECTION WITHIN THE TRAILERS WILL BE PROVIDED BY TWO WALL-MOUNTED, 25-POUND, DRY CHEMICAL-TYPE FIRE EXTINGUISHERS. THE TRAILERS AND ALL TREATMENT UNITS ARE CONSTRUCTED OF NON-COMBUSTIBLES. OTHER THAN MINIMAL FILES AND RECORDS, NO COMBUSTIBLE MATERIALS WILL BE MAINTAINED WITHIN THE TRAILERS. EXTERNAL WATER PIPES WILL BE ABOVE GROUND AND HEAT TRACED TO PROTECT AGAINST FREEZING. ALL TANKS, PIPING AND SUMPS WILL BE EQUIPPED WITH SECONDARY CONTAINMENT TO COMPLY WITH 6 CCR 1007-3 AND 40 CFR 264.193.

Text: Full-text ROD document follows on next page.

Text:
FIVE IN THE 903 PAD
AREA, FOUR IN THE MOUND AREA, AND 11 IN THE EAST TRENCHES AREAS. THE HISTORICAL USE OF THE OU 2 IHSSS IS DISCUSSED BELOW.

2.1.2.1 903 PAD AREA

FIVE SITES ARE LOCATED WITHIN THE 903 PAD AREA (FIGURE 2-2). THESE SITES ARE:

* 903 DRUM STORAGE SITE (IHSS REF. NO. 112)
* 903 LIP SITE (IHSS REF. NO. 155)
* TRENCH T-2 SITE (IHSS REF. NO. 109)
* REACTIVE METAL DESTRUCTION SITE (IHSS REF. NO. 140)
* GAS DETOXIFICATION SITE (IHSS REF. NO. 183)

PRESENTED BELOW ARE BRIEF DESCRIPTIONS OF EACH OF THESE SITES.

1. 903 DRUM STORAGE SITE (IHSS REF. NO. 112) -- THE SITE WAS USED FROM 1958 TO 1967 TO STORE DRUMS CONTAINING RADIOACTIVELY CONTAMINATED, USED MACHINE CUTTING OIL. THE DRUMS, SOME OF WHICH CORRODED AND LEAKED, CONTAINED OILS AND SOLVENTS CONTAMINATED WITH PLUTONIUM OR URANIUM. MOST OF THE DRUMS CONTAINED LATHE COOLANT CONSISTING OF MINERAL OIL AND CARBON TETRACHLORIDE (CCL4) IN VARYING PROPORTIONS. HOWEVER, AN UNKNOWN NUMBER OF DRUMS CONTAINED HYDRAULIC OILS, VACUUM PUMP OILS, TRICHLOROETHENE (TCE), TETRACHLOROETHENE (PCE), SILICONE OILS, AND ACETONE (ROCKWELL INTERNATIONAL, 1987B). ETHANOLAMINE WAS ALSO ADDED TO NEW DRUMS AFTER 1959 TO REDUCE THE DRUM CORROSION RATE. ALL DRUMS WERE REMOVED BY 1968.

AFTER THE DRUMS WERE REMOVED, EFFORTS WERE MADE TO SCRAPE AND MOVE THE

PLUTONIUM-CONTAMINATED SOIL INTO A RELATIVELY SMALL AREA, COVER IT WITH FILL MATERIAL, AND TOP IT WITH AN ASPHALT CONTAINMENT COVER. THIS REMEDIAL ACTION WAS COMPLETED IN NOVEMBER 1969. AN ESTIMATED 5,000 GALLONS OF LIQUID LEAKED INTO THE SOIL DURING USE OF THE DRUM STORAGE SITE. THE LIQUID WAS ESTIMATED TO CONTAIN 86 GRAMS OF PLUTONIUM (ROCKWELL INTERNATIONAL, 1987B).

2. 903 LIP SITE (IHSS REF. NO. 155) -- DURING DRUM REMOVAL AND CLEAN-UP ACTIVITIES ASSOCIATED WITH THE 903 DRUM STORAGE SITE, WINDS DISTRIBUTED PLUTONIUM BEYOND THE PAD TO THE SOUTH AND EAST. ALTHOUGH SOME PLUTONIUM-CONTAMINATED SOILS WERE REMOVED, RADIOACTIVE CONTAMINATION IS STILL PRESENT AT THE 903 LIP SITE IN THE SURFICIAL SOILS.

3. TRENCH T-2 SITE (IHSS REF. NO. 109) -- THIS TRENCH WAS USED PRIOR TO 1968 FOR THE DISPOSAL OF SANITARY SEWAGE SLUDGE AND FLATTENED DRUMS CONTAMINATED WITH URANIUM AND PLUTONIUM.

4. REACTIVE METAL DESTRUCTION SITE (IHSS REF. NO. 140) -- THIS SITE WAS USED DURING THE 1950S AND 1960S PRIMARILY FOR THE DESTRUCTION OF LITHIUM METAL (DOE, 1986). SMALL QUANTITIES OF OTHER REACTIVE METALS (SODIUM, CALCIUM, AND MAGNESIUM) AND SOME SOLVENTS WERE ALSO DESTROYED AT THIS LOCATION (ILLSLEY, 1978).

5. GAS DETOXIFICATION SITE (IHSS 183) -- BUILDING 952, LOCATED SOUTH OF THE 903 DRUM STORAGE SITE, WAS USED TO DETOXIFY VARIOUS BOTTLED GASES

BETWEEN JUNE 1982 AND AUGUST 1983.

A PHASE I RI HAS BEEN COMPLETED FOR THESE FIVE SITES. PHASE II IS PLANNED FOR THIS FALL.

2.1.2.2 MOUND AREA

THE MOUND AREA IS COMPOSED OF FOUR SITES (FIGURE 2-2). THESE ARE:

* MOUND SITE (IHSS REF. NO. 113)
* TRENCH T-1 SITE (IHSS REF. NO. 108)
* OIL BURN PIT NO. 2 SITE (IHSS REF. NO. 153)
* PALLET BURN SITE (IHSS REF. NO. 154)

THESE SITES ARE DESCRIBED INDIVIDUALLY BELOW.

1. MOUND SITE (IHSS REF. NO. 113) -- THE MOUND SITE CONTAINED APPROXIMATELY 1,405 DRUMS CONTAINING PRIMARILY DEPLETED URANIUM AND PLUTONIUM CONTAMINATED LATHE COOLANT. SOME DRUMS ALSO CONTAINED "PERCLENE" (SMITH, 1975). PERCLENE WAS A BRAND NAME OF TETRACHLOROETHENE (SAX AND LEWIS, 1987). SOME OF THE DRUMMED WASTES PLACED IN THE MOUND SITE WERE IN SOLID FORM (ROCKWELL INTERNATIONAL, 1987B). CLEANUP OF THE MOUND SITE WAS ACCOMPLISHED IN 1970, AND THE MATERIALS REMOVED WERE PACKAGED AND SHIPPED TO AN OFF-SITE DOE FACILITY AS RADIOACTIVE WASTE. SUBSEQUENT SURFICIAL SOILS SAMPLING IN THE

VICINITY OF THE EXCAVATED MOUND SITE INDICATED 0.8 TO 112.5 DISINTEGRATIONS PER MINUTE PER GRAM (D/M/G) ALPHA ACTIVITY. THIS RADIOACTIVE CONTAMINATION IS THOUGHT TO HAVE COME FROM THE 903 DRUM STORAGE SITE VIA WIND DISPERSION RATHER THAN FROM THE MOUND SITE (ROCKWELL INTERNATIONAL, 1987A).

2. TRENCH T-1 SITE (IHSS REF. NO. 108) -- THE TRENCH WAS USED FROM 1954 UNTIL 1962 AND CONTAINS APPROXIMATELY 125 DRUMS FILLED WITH DEPLETED URANIUM CHIPS (DOW CHEMICAL, 1971) AND PLUTONIUM CHIPS COATED WITH LATHE COOLANT. THE DRUMS ARE STILL PRESENT IN THIS TRENCH.

3. OIL BURN PIT NO. 2 SITE (IHSS REF. NO. 153) -- OIL BURN PIT NO. 2 IS ACTUALLY TWO PARALLEL TRENCHES WHICH WERE USED IN 1957 AND FROM 1961 TO 1965 TO BURN 1,082 DRUMS OF OIL CONTAINING URANIUM (ROCKWELL INTERNATIONAL, 1987B). THE RESIDUES FROM THE BURNING OPERATIONS AND SOME FLATTENED DRUMS WERE COVERED WITH BACKFILL. CLEAN-UP OPERATIONS WERE PERFORMED IN THE 1970S (ROCKWELL INTERNATIONAL, 1987B).

4. PALLET BURN SITE (IHSS REF. NO. 154) -- AN AREA SOUTHWEST OF OIL BURN PIT NO. 2 WAS REPORTEDLY USED TO DESTROY WOODEN PALLETS IN 1965. THE TYPES OF HAZARDOUS SUBSTANCES OR RADIONUCLIDES THAT MAY HAVE BEEN SPILLED ON THESE PALLETS IS UNKNOWN. CLEAN-UP ACTIONS WERE PERFORMED IN THE 1970S (DOE, 1986).

2.1.2.3 EAST TRENCHES AREA

THE EAST TRENCHES AREA CONSISTS OF NINE BURIAL TRENCHES AND TWO SPRAY IRRIGATION AREAS (FIGURE 2-2). THE TRENCH NUMBERS AND THEIR RESPECTIVE IHSS DESIGNATIONS ARE:

* TRENCH T-3 -- IHSS REF. NO. 110
* TRENCH T-4 -- IHSS REF. NO. 111.1

* TRENCH T-5 -- IHSS REF. NO. 111.2
* TRENCH T-6 -- IHSS REF. NO. 111.3
* TRENCH T-7 -- IHSS REF. NO. 111.4
* TRENCH T-8 -- IHSS REF. NO. 111.5
* TRENCH T-9 -- IHSS REF. NO. 111.6
* TRENCH T-10 -- IHSS REF. NO. 111.7
* TRENCH T-11 -- IHSS REF. NO. 111.8

TRENCHES T-3, T-4, T-10, AND T-11 ARE LOCATED NORTH OF THE EAST ACCESS ROAD, AND TRENCHES T-5 THROUGH T-9 ARE LOCATED SOUTH OF THE EAST ACCESS ROAD. THE TRENCHES WERE USED FROM 1954 TO 1968 FOR DISPOSAL OF DEPLETED URANIUM, FLATTENED DEPLETED URANIUM AND PLUTONIUM-CONTAMINATED DRUMS, AND SANITARY SEWAGE SLUDGE. THE WASTES HAVE NOT BEEN DISTURBED SINCE THEIR BURIAL.

IHSS NUMBERS 216.2 AND 216.3 ARE PART OF THE EAST TRENCHES AREA AND ARE DESIGNATED AS IHSSS BECAUSE THEY WERE USED FOR SPRAY IRRIGATION OF SEWAGE TREATMENT PLANT EFFLUENT. THE HISTORICAL DISCHARGE OF POND B-3

WAS TO THIS SPRAY IRRIGATION AREA. THIS PRACTICE HAS BEEN TERMINATED HOWEVER, AND THE CURRENT POND B-3 DISCHARGE IS SENT TO POND B-4.

2.1.3 SURROUNDING LAND USE AND POPULATION DENSITY

THE RFP IS LOCATED IN A RURAL AREA (FIGURE 2-3). APPROXIMATELY 50 PERCENT OF THE AREA WITHIN TEN MILES OF THE RFP IS IN JEFFERSON COUNTY. THE REMAINDER IS LOCATED IN BOULDER COUNTY (40 PERCENT) AND ADAMS COUNTY (10 PERCENT). ACCORDING TO THE 1973 COLORADO LAND USE MAP, 75 PERCENT OF THIS LAND WAS UNUSED OR WAS USED FOR AGRICULTURE. SINCE THAT TIME, PORTIONS OF THIS LAND HAVE BEEN CONVERTED TO HOUSING, WITH SEVERAL NEW HOUSING SUBDIVISIONS BEING STARTED WITHIN A FEW MILES OF THE BUFFER ZONE, SOUTHEAST OF THE PLANT SITE.

A DEMOGRAPHIC STUDY, USING 1990 CENSUS DATA, SHOWS THAT APPROXIMATELY 1.9 MILLION PEOPLE LIVED WITHIN THE EIGHT-COUNTY DENVER METROPOLITAN REGION. THIS REGION COVERS APPROXIMATELY 5,076 SQUARE MILES AND INCLUDES THE FOLLOWING COUNTIES: ADAMS, ARAPAHOE, BOULDER, DENVER, DOUGLAS, JEFFERSON, CLEAR CREEK, AND GILPIN. THE MOST POPULATED SECTOR IS TO THE SOUTHEAST, TOWARD THE CENTER OF DENVER. THIS SECTOR HAD A 1989 POPULATION OF APPROXIMATELY 600,000 PEOPLE LIVING BETWEEN 10 AND 50 MILES FROM ROCKY FLATS. RECENT POPULATION ESTIMATES REGISTERED BY THE DENVER REGIONAL COUNCIL OF GOVERNMENTS (DRCOG) FOR THE EIGHT-COUNTY DENVER METRO REGION HAVE SHOWN DISTINCT PATTERNS OF GROWTH BETWEEN THE FIRST AND SECOND HALVES OF THE DECADE. BETWEEN 1980 AND 1985, THE POPULATION OF THE EIGHT-COUNTY REGION INCREASED BY 197,890, A 2.4 PERCENT ANNUAL GROWTH RATE (DRCOG, 1989). BETWEEN 1985 AND 1990 A POPULATION GAIN OF 80,875 WAS RECORDED, REPRESENTING A 0.9 PERCENT ANNUAL INCREASE. THE 1990 POPULATION SHOWED AN INCREASE OF 9,300 (OR 0.5 PERCENT) FROM THE SAME DATE IN 1989 (DRCOG, 1990).

THE RFP IS APPROXIMATELY LOCATED IN THE CENTER OF RFP LEGAL LAND AREA WHICH IS APPROXIMATELY 3 MILES (NORTH-SOUTH) BY 4 MILES (EAST-WEST). THERE ARE EIGHT PUBLIC SCHOOLS WITHIN SIX MILES OF THE RFP. THE NEAREST EDUCATIONAL FACILITY IS THE WITT ELEMENTARY SCHOOL, WHICH IS APPROXIMATELY 2.7 MILES EAST OF THE PLANT BUFFER ZONE. THE CLOSEST HOSPITAL IS CENTENNIAL PEAKS HOSPITAL, LOCATED APPROXIMATELY SEVEN MILES NORTHEAST. THE CLOSEST PARK AND RECREATIONAL AREA IS THE STANDLEY LAKE AREA, WHICH IS APPROXIMATELY FIVE MILES SOUTHEAST OF THE PLANT.

BOATING, PICNICKING, AND LIMITED OVERNIGHT CAMPING ARE PERMITTED. SEVERAL OTHER SMALL PARKS EXIST IN COMMUNITIES WITHIN TEN MILES. THE CLOSEST MAJOR PARK, GOLDEN GATE CANYON STATE PARK, LOCATED APPROXIMATELY 15 MILES TO THE SOUTHWEST, PROVIDES 8,400 ACRES OF GENERAL CAMPING AND OUTDOOR RECREATION. OTHER NATIONAL AND STATE PARKS ARE LOCATED IN THE MOUNTAINS WEST OF THE RFP, BUT ALL ARE MORE THAN 15 MILES AWAY.

SOME OF THE LAND ADJACENT TO THE PLANT IS ZONED FOR INDUSTRIAL DEVELOPMENT. INDUSTRIAL FACILITIES WITHIN FIVE MILES INCLUDE THE FORMER TOSCO (THE OIL SHALE COMPANY) LABORATORY (40-ACRE SITE LOCATED TWO MILES SOUTH AND NOW OCCUPIED BY ANALYTICA, INC.), THE GREAT WESTERN INORGANICS

PLANT (TWO MILES SOUTH), THE FRONTIER FOREST PRODUCTS YARD (TWO MILES SOUTH), THE IDEALITE LIGHTWEIGHT AGGREGATE PLANT (2.4 MILES NORTHWEST), AND THE JEFFERSON COUNTY AIRPORT AND INDUSTRIAL PARK (990-ACRE SITE LOCATED 4.8 MILES NORTHEAST).

SEVERAL RANCHES ARE LOCATED WITHIN TEN MILES OF THE PLANT, PRIMARILY IN JEFFERSON AND BOULDER COUNTIES. THEY ARE OPERATED TO PRODUCE CROPS, RAISE BEEF CATTLE, SUPPLY MILK, AND BREED AND TRAIN HORSES. ACCORDING TO THE 1987 COLORADO AGRICULTURAL STATISTICS, 20,758 ACRES OF CROPS WERE PLANTED IN JEFFERSON COUNTY (TOTAL LAND AREA OF APPROXIMATELY 475,000 ACRES), AND 68,760 ACRES OF CROPS WERE PLANTED IN BOULDER COUNTY (TOTAL LAND AREA OF 405,760 ACRES). CROPS CONSISTED OF: WINTER WHEAT, CORN, BARLEY, DRY BEANS, SUGAR BEETS, HAY, AND OATS. LIVESTOCK CONSISTED OF: 5,314 HEAD OF CATTLE, 113 HOGS, AND 346 SHEEP IN JEFFERSON COUNTY, AND 19,578 HEAD OF CATTLE, 2,216 HOGS, AND 12,133 SHEEP IN BOULDER COUNTY (POST, 1989).

2.2 AFFECTED AND SENSITIVE ENVIRONMENT

2.2.1 PHYSICAL ENVIRONMENT

THE NATURAL ENVIRONMENT OF THE PLANT AND VICINITY IS INFLUENCED PRIMARILY BY ITS PROXIMITY TO THE FRONT RANGE OF THE ROCKY MOUNTAINS. THE PLANT IS DIRECTLY EAST OF THE NORTH-SOUTH TRENDING ROCKY MOUNTAINS, WITH AN ELEVATION OF APPROXIMATELY 6,000 FEET ABOVE SEA LEVEL. THE RFP IS LOCATED ON A BROAD, EASTWARD-SLOPING PLAIN OF OVERLAPPING ALLUVIAL FANS DEVELOPED ALONG THE FRONT RANGE. THE FANS EXTEND ABOUT FIVE MILES IN AN EASTWARD DIRECTION FROM THEIR ORIGIN IN THE ABRUPTLY RISING FRONT RANGE AND TERMINATE ON THE EAST AT A BREAK IN SLOPE TO LOW ROLLING HILLS. THE CONTINENTAL DIVIDE IS ABOUT 16 MILES WEST OF THE PLANT. THE OPERATIONAL AREA AT THE PLANT IS LOCATED NEAR THE EASTERN EDGE OF THE FANS ON A TERRACE BETWEEN STREAM-CUT VALLEYS (NORTH WALNUT CREEK AND WOMAN CREEK). THE ROCKY FLATS ALLUVIUM (THE DEPOSIT OF COALESCING ALLUVIAL FANS) IS EXPOSED AT THE SURFACE AND CONSISTS OF A TOPSOIL LAYER UNDERLAIN BY AS MUCH AS 100 FEET OF SILT, CLAY, SAND, AND GRAVEL.

THE RFP IS SITUATED IN A SEMIARID REGION THAT AVERAGES 15 INCHES OF ANNUAL PRECIPITATION. FORTY PERCENT OF THE YEARLY TOTAL COMES IN THE SPRING, MUCH OF IT IN THE FORM OF SNOW. OF THE BALANCE, 30 PERCENT IS ACCOUNTED FOR BY SUMMER THUNDERSTORMS, WITH THE REST OCCURRING IN THE FALL (11 PERCENT) AND WINTER MONTHS (19 PERCENT). AVERAGE YEARLY SNOWFALL IS 85 INCHES. RUNOFF CONTROL STRUCTURES EXIST TO CHANNEL SURFACE WATER FROM THE PLANT TO MONITORING PONDS. THESE STRUCTURES ARE SIZED TO ACCOMMODATE THE 100-YEAR STORM EVENT WHICH IS EQUIVALENT TO FOUR INCHES OF RAIN IN A SIX-HOUR PERIOD.

MINERAL RESOURCES FOUND IN THE VICINITY OF RFP INCLUDE SAND, GRAVEL,

CRUSHED ROCK, CLAY, COAL, AND URANIUM. THERE ARE NO KNOWN CLAY, COAL OR URANIUM DEPOSITS WITHIN THE RFP BUFFER ZONE; HOWEVER, THESE COMMODITIES ARE MINED IN THE REGION, WITHIN 20 MILES OF THE PLANT. THE SCHWARTZWALDER URANIUM MINE IS LOCATED APPROXIMATELY FOUR MILES

SOUTHWEST OF THE RFP. THE MINE HAS BEEN THE LARGEST PRODUCER OF VEIN TYPE URANIUM ORE IN COLORADO AND RANKS AMONG THE SIX LARGEST OF THIS TYPE IN THE UNITED STATES (DOE, 1980). ACTIVE SAND AND GRAVEL MINES LIE WITHIN THE BUFFER ZONE BOUNDARIES. THERE IS AN AGGREGATE PROCESSING FACILITY ADJACENT TO THE NORTHWEST CORNER OF THE BUFFER ZONE WHICH REOPENED IN 1989. OIL AND NATURAL GAS PRODUCTION IS ALSO ACTIVE IN NEARBY NORTHWEST ADAMS COUNTY AND EAST CENTRAL BOULDER COUNTY.

OIL AND NATURAL GAS ACTIVITY NEAR ROCKY FLATS PLANT INCLUDES OIL FIELD DEVELOPMENTS, PIPELINE, AND PRODUCTION OPERATIONS. THE CLOSEST MAJOR OIL AND GAS FIELDS ARE IN NORTHWEST ADAMS COUNTY (JACKPOT AND SPINDLE FIELDS), AND A SMALLER FIELD OCCURS IN EAST CENTRAL BOULDER COUNTY (BOULDER FIELD). A NATURAL GAS PIPELINE THAT ORIGINATES IN WYOMING AND PROCEEDS ACROSS EASTERN COLORADO INTO OKLAHOMA IS LOCATED APPROXIMATELY TEN MILES NORTH OF THE PLANT IN SOUTHERN BOULDER COUNTY. LOCAL NATURAL GAS PIPELINES CROSS THE SOUTH SIDE OF THE ROCKY FLATS PLANT. THE NEAREST REFINERY OPERATION IS THE CONOCO REFINERY LOCATED IN COMMERCE CITY ABOUT 20 MILES EAST OF THE PLANT. A NORTH-SOUTH ORIENTED OIL PIPELINE FEEDS IN TO THE REFINERY FROM FIELDS IN NORTHEASTERN COLORADO AND SOUTHEASTERN WYOMING (DONALDSON AND MACMILLAN, 1980).

THERE ARE FOUR MAIN DRAINAGES FROM THE PLANT PROPERTY AS SHOWN ON FIGURE 2-4. NORTH WALNUT, SOUTH WALNUT, ROCK AND WOMAN CREEKS ALL HAVE INTERMITTENT STREAMS WHICH PROVIDE DRINKING WATER AND IRRIGATION WATER. THERE ARE A NUMBER OF DITCHES CROSSING THE AREA AS WELL, CONVEYING WATER COLLECTED OFF SITE TO OTHER AREAS, THE PLANT, WALNUT CREEK, OR WOMAN CREEK. UNTIL LATE 1974, PLANT WASTEWATER HAD BEEN DISCHARGED TO WALNUT CREEK, AND UNTIL 1975, FILTER BACKWASH FROM THE RAW WATER TREATMENT PLANT WENT INTO WOMAN CREEK. ALL PROCESS WASTEWATER IS NOW EITHER RECYCLED OR DISPOSED THROUGH EVAPORATION. SANITARY WASTEWATER IS DISCHARGED IN ACCORDANCE WITH THE RFP'S NPDES PERMIT EFFLUENT REQUIREMENTS.

2.2.2 REGIONAL AND LOCAL HYDROGEOLOGY

THE STRATIGRAPHIC SECTION THAT PERTAINS TO THE RFP INCLUDES, IN DESCENDING ORDER, UNCONSOLIDATED SURFICIAL UNITS (ROCKY FLATS ALLUVIUM, VARIOUS TERRACE ALLUVIUMS, VALLEY FILL ALLUVIUM, AND COLLUVIUM) (FIGURE 2-5), ARAPAHOE FORMATION, LARAMIE FORMATION, AND FOX HILLS SANDSTONE (FIGURE 2-6). GROUND WATER OCCURS UNDER UNCONFINED CONDITIONS IN BOTH THE SURFICIAL AND SHALLOW BEDROCK UNITS. IN ADDITION, CONFINED GROUNDWATER FLOW OCCURS IN DEEPER BEDROCK SANDSTONES.

2.2.2.1 ALLUVIAL MATERIALS

THE ROCKY FLATS ALLUVIUM UNDERLIES A LARGE PORTION OF THE PLANT. THE ALLUVIUM IS A BROAD PLANAR DEPOSIT CONSISTING OF A TOPSOIL LAYER UNDERLAIN BY UP TO 100 FEET OF POORLY STRATIFIED SILT, CLAY, SAND, GRAVEL AND COBBLES. UNCONFINED GROUNDWATER FLOW OCCURS IN THE ROCKY FLATS ALLUVIUM WHICH IS RELATIVELY PERMEABLE. RECHARGE TO THE ALLUVIUM

IS FROM PRECIPITATION, SNOWMELT, AND WATER LOSSES FROM DITCHES, STREAMS, AND PONDS THAT ARE CUT INTO THE ALLUVIUM. GENERAL WATER MOVEMENT IN THE ROCKY FLATS ALLUVIUM IS FROM WEST TO EAST AND TOWARD THE DRAINAGES. GROUNDWATER FLOW IS ALSO CONTROLLED BY SEDIMENT DRAINAGES IN THE TOP OF BEDROCK. THE WATER TABLE IN THE ROCKY FLATS ALLUVIUM RISES IN RESPONSE TO RECHARGE DURING THE SPRING AND DECLINES DURING THE REMAINDER OF THE YEAR. DISCHARGE FROM THE ALLUVIUM OCCURS AT MINOR SEEPS IN THE COLLUVIUM THAT COVERS THE CONTACT BETWEEN THE ALLUVIUM AND BEDROCK ALONG THE EDGES OF THE VALLEYS. OU 2 IS SITUATED ON A TERRACE OF ROCKY FLATS ALLUVIUM THAT THINS EAST OF THE PLANT AND DOES NOT DIRECTLY SUPPLY WATER TO WELLS LOCATED DOWNGRADIENT OF ROCKY FLATS.

VARIOUS OTHER ALLUVIAL DEPOSITS OCCUR TOPOGRAPHICALLY BELOW THE ROCKY FLATS ALLUVIUM IN THE PLANT DRAINAGES. COLLUVIUM (SLOPE WASH) MANTLES THE VALLEY SIDE SLOPES BETWEEN THE ROCKY FLATS ALLUVIUM AND THE VALLEY BOTTOMS. IN ADDITION, REMNANTS OF YOUNGER TERRACE DEPOSITS INCLUDING THE VERDOS, SLOCUM, AND LOUVIERS ALLUVIA OCCUR OCCASIONALLY ALONG THE VALLEY SIDE SLOPES. RECENT VALLEY FILL ALLUVIUM OCCURS IN THE ACTIVE STREAM CHANNELS.

UNCONFINED GROUNDWATER FLOW OCCURS IN THESE SURFICIAL UNITS. RECHARGE IS FROM PRECIPITATION, PERCOLATION FROM STREAMS AND DITCHES DURING PERIODS OF SURFACE WATER RUNOFF, AND BY SEEPS DISCHARGING FROM THE ROCKY FLATS ALLUVIUM. DISCHARGE IS BY EVAPOTRANSPIRATION AND BY SEEPAGE INTO OTHER GEOLOGIC FORMATIONS AND STREAMS. THE DIRECTION OF GROUNDWATER FLOW IS GENERALLY DOWNSLOPE THROUGH COLLUVIAL MATERIALS AND THEN ALONG THE COURSE OF THE STREAM IN VALLEY FILL MATERIALS. DURING PERIODS OF HIGH SURFACE WATER FLOW, WATER IS LOST TO BANK STORAGE IN THE VALLEY FILL ALLUVIUM AND RETURNS TO THE STREAM AFTER THE RUNOFF SUBSIDES.

2.2.2.2 BEDROCK MATERIALS

THE CRETACEOUS ARAPAHOE FORMATION UNDERLIES SURFICIAL MATERIALS BENEATH THE PLANT. THIS FORMATION IS A FLUVIAL DEPOSIT COMPOSED OF OVERBANK AND CHANNEL DEPOSITS. IT CONSISTS PRIMARILY OF CLAYSTONE WITH SOME SANDSTONE AND IS NEARLY FLAT LYING BENEATH THE PLANT (LESS THAN A TWO-DEGREE DIP) BASED ON THE DRAFT SEISMIC PROFILING REPORT (ROCKWELL INTERNATIONAL, 1989A). THE SAND BODIES WITHIN THE CLAYSTONE ARE COMPOSED OF FINE-GRAINED SANDS AND SILTS, AND THEIR HYDRAULIC CONDUCTIVITY IS RELATIVELY LOW COMPARED TO THE OVERLYING ROCKY FLATS ALLUVIUM. A HIGH RESOLUTION SEISMIC REFLECTION SURVEY IS ONGOING AT THE PLANT TO FURTHER CHARACTERIZE BEDROCK GEOLOGY.

THE ARAPAHOE FORMATION IS RECHARGED BY GROUNDWATER MOVEMENTS FROM OVERLYING SURFICIAL DEPOSITS AND BY LEAKAGE FROM STREAMS. THE MAIN RECHARGE AREAS ARE UNDER THE ROCKY FLATS ALLUVIUM, ALTHOUGH SOME RECHARGE FROM THE COLLUVIUM AND VALLEY FILL ALLUVIUM LIKELY OCCURS ALONG THE STREAM VALLEYS. RECHARGE IS GREATEST DURING THE SPRING AND EARLY SUMMER WHEN RAINFALL AND STREAM FLOW ARE AT A MAXIMUM AND WATER LEVELS IN THE ROCKY FLATS ALLUVIUM ARE HIGH. GROUNDWATER MOVEMENT IN THE

ARAPAHOE FORMATION IS GENERALLY TOWARD THE EAST, ALTHOUGH FLOW WITHIN INDIVIDUAL SANDSTONES IS NOT FULLY CHARACTERIZED AT THIS TIME. REGIONALLY, GROUNDWATER FLOW IN THE ARAPAHOE FORMATION IS TOWARD THE SOUTH PLATTE RIVER IN THE CENTER OF THE DENVER BASIN (ROBSON, 1981A).

THE LARAMIE FORMATION UNDERLIES THE ARAPAHOE AND IS COMPOSED OF TWO

UNITS, A THICK UPPER CLAYSTONE AND A LOWER SANDSTONE. THE CLAYSTONE IS GREATER THAN 700 FEET THICK AND IS OF VERY LOW HYDRAULIC CONDUCTIVITY; THEREFORE, THE US GEOLOGIC SURVEY (HURR, 1976) CONCLUDES THAT PLANT OPERATIONS WILL NOT IMPACT ANY UNITS BELOW THE UPPER CLAYSTONE UNIT OF THE LARAMIE FORMATION.

THE LOWER SANDSTONE UNIT OF THE LARAMIE FORMATION AND THE UNDERLYING FOX HILLS SANDSTONE COMPRISE A REGIONALLY IMPORTANT AQUIFER IN THE DENVER BASIN KNOWN AS THE LARAMIE-FOX HILLS AQUIFER. AQUIFER THICKNESS RANGES FROM 200 TO 300 FEET NEAR THE CENTER OF THE BASIN. THESE UNITS SUBCROP WEST OF THE PLANT AND CAN BE SEEN IN CLAY PITS EXCAVATED THROUGH THE ROCKY FLATS ALLUVIUM. THE STEEPLY DIPPING BEDS OF THESE UNITS WEST OF THE PLANT (APPROXIMATELY A 50-DEGREE DIP) QUICKLY FLATTEN TO THE EAST (LESS THAN TWO-DEGREE DIP) BASED ON PRELIMINARY RESULTS OF THE HIGH RESOLUTION SEISMIC REFLECTION STUDY (ROCKWELL INTERNATIONAL, 1989A). RECHARGE TO THE AQUIFER OCCURS ALONG THE RATHER LIMITED OUTCROP AREA EXPOSED TO SURFACE WATER FLOW AND LEAKAGE ALONG THE FRONT RANGE (ROBSON, 1981B).

SIXTEEN WELLS WERE COMPLETED IN VARIOUS ZONES WITHIN BEDROCK DURING THE 1987 DRILLING PROGRAM AT OU 2. ALTHOUGH CLAYSTONE WAS THE MOST FREQUENTLY ENCOUNTERED LITHOLOGY IMMEDIATELY BELOW THE ALLUVIUM/BEDROCK CONTACT, INTERBEDDED SANDY, SILTY AND LIGNITIC UNITS WITH BOTH GRADATIONAL AND SHARP CONTACTS WERE PRESENT AS WELL. ALL OF THE BEDROCK ENCOUNTERED DIRECTLY BENEATH SURFICIAL MATERIALS WAS WEATHERED, AND SOME SATURATED SANDSTONES WERE ENCOUNTERED.

2.2.3 SITE HYDROLOGY

2.2.3.1 SURFACE WATER

SURFACE WATER DRAINAGE PATTERNS AT THE RFP ARE SHOWN ON FIGURES 2-2 AND 2-4. A DISCUSSION OF THE MAJOR OU 2 SURFACE WATER FEATURES, INCLUDING THE SOUTH WALNUT CREEK AND WOMAN CREEK DRAINAGES, IS PRESENTED BELOW. ALTHOUGH THIS IM/IRA PLAN ADDRESSES COLLECTION AND TREATMENT OF CONTAMINATED SOUTH WALNUT CREEK BASIN SURFACE WATER; THE WOMAN CREEK DRAINAGE IS INCLUDED IN THE FOLLOWING DISCUSSION TO PROVIDE A COMPLETE DESCRIPTION OF OU 2 HYDROLOGY. COLLECTION AND TREATMENT OF WOMAN CREEK BASIN SEEPAGE SOUTHEAST OF THE 903 PAD AREA WILL BE ADDRESSED IN A SEPARATE IM/IRA PLAN AS DISCUSSED IN SECTION 1.

SOUTH WALNUT CREEK

THE HEADWATERS AREA OF SOUTH WALNUT CREEK HAS BEEN FILLED DURING

CONSTRUCTION OF RFP FACILITIES. AS A RESULT, FLOW ORIGINATES FROM A BURIED CULVERT LOCATED WEST OF BUILDING 991. FLOW IN THE UPPER REACH OF SOUTH WALNUT CREEK IS DIRECTED TO THE SOUTH OF BUILDING 991 AND UNDER THE PERIMETER SECURITY ZONE (PSZ) FENCE BY A BURIED METAL CORRUGATED CULVERT. THE CULVERT OUTLET IS LOCATED IN THE SOUTH WALNUT CREEK DRAINAGE APPROXIMATELY 500 FEET DOWNGRADIENT OF THE PSZ FENCE NEAR THE DISCHARGE OF THE SEWAGE TREATMENT PLANT (SEE FIGURE 4-2). A CONCRETE CULVERT AND A SECOND METAL CORRUGATED CULVERT ALSO DISCHARGE INTO THE SOUTH WALNUT CREEK DRAINAGE JUST DOWNGRADIENT OF THE PSZ FENCE AND NORTH OF THE MOUND AREA. THE FLOW FROM THE CONCRETE CULVERT ORIGINATES AS SEEPAGE FROM THE HILLSIDE SOUTH OF BUILDING 991 AND FLOWS INTO A DITCH ALONG THE SLOPE. THE METAL CORRUGATED CULVERT DRAINS PLANT RUNOFF COLLECTING IN A DRAINAGE SOUTH OF THE PSZ. THE COMBINED FLOW THEN

ENTERS THE SOUTH WALNUT CREEK DETENTION POND SYSTEM. BELOW THE DETENTION PONDS, SOUTH WALNUT CREEK, NORTH WALNUT CREEK, AND AN UNNAMED TRIBUTARY JOIN WITHIN THE BUFFER ZONE TO FORM WALNUT CREEK. GREAT WESTERN RESERVOIR IS LOCATED APPROXIMATELY ONE MILE EAST OF THIS CONFLUENCE AND IS A DRINKING WATER SOURCE FOR BROOMFIELD. FLOW IS ROUTED AROUND GREAT WESTERN RESERVOIR BY THE BROOMFIELD DIVERSION CANAL. THE SOUTH WALNUT CREEK DETENTION POND SYSTEM CONSISTS OF FIVE PONDS (B-1, B-2, B-3, B-4, AND B-5) THAT RETAIN SURFACE WATER RUNOFF AND RFP DISCHARGES FOR FLOOD CONTROL, AND FOR MONITORING AND TREATMENT PRIOR TO DOWNSTREAM RELEASE. ALL FLOW IN THE POND SYSTEM IS EVENTUALLY DETAINED IN POND B-5, WHERE IT IS TREATED AND MONITORED PRIOR TO DISCHARGE. WATER IS DISCHARGED FROM POND B-5 IN ACCORDANCE WITH THE PLANT'S NPDES PERMIT (DISCHARGE POINT 006). PONDS B-1 AND B-2 ARE RESERVED FOR SPILL CONTROL, SURFACE WATER RUNOFF, OR TREATED SANITARY WASTE OF QUESTIONABLE QUALITY. POND B-3 IS USED AS A HOLDING POND FOR SANITARY SEWAGE TREATMENT PLANT EFFLUENT. THE HISTORICAL DISCHARGE OF POND B-3 WAS A SPRAY IRRIGATION SYSTEM LOCATED IN THE VICINITY OF THE EAST TRENCHES. THIS PRACTICE HAS BEEN TERMINATED, HOWEVER, AND THE CURRENT POND B-3 DISCHARGE IS SENT TO POND B-4. IN ADDITION TO POND B-3 DISCHARGE, PONDS B-4 AND B-5 RECEIVE SURFACE WATER RUNOFF FROM THE CENTRAL PORTION OF THE PLANT. THE SURFACE WATER RUNOFF RECEIVED BY POND B-4 IS COLLECTED BY THE CENTRAL AVENUE DITCH AND THE SOUTH WALNUT CREEK DRAINAGE.

WOMAN CREEK

WOMAN CREEK IS LOCATED SOUTH OF THE PLANT, WITH HEADWATERS IN LARGELY UNDISTURBED ROCKY FLATS ALLUVIUM. RUNOFF FROM THE SOUTHERN PART OF THE PLANT IS COLLECTED IN THE SOUTH INTERCEPTOR DITCH LOCATED NORTH OF THE CREEK AND DELIVERED DOWNSTREAM TO POND C-2 (SEE FIGURE 2-2). POND C-1 (UPSTREAM OF C-2) RECEIVES STREAM FLOW FROM WOMAN CREEK. FLOW IN WOMAN CREEK IS ALSO INFLUENCED BY DIVERSION OF WATER FROM ROCKY FLATS LAKE INTO THE CREEK BY LOCAL LANDOWNERS. THE DISCHARGE FROM POND C-1 IS DIVERTED AROUND POND C-2 INTO THE WOMAN CREEK CHANNEL DOWNSTREAM. WATER IN POND C-2 IS TREATED AND MONITORED PRIOR TO DISCHARGE. DISCHARGE FROM POND C-2 IS IN ACCORDANCE WITH THE PLANT'S NPDES PERMIT (DISCHARGE POINT 007). HISTORICALLY, DISCHARGE FROM POND C-2 HAS BEEN TO WOMAN CREEK,

HOWEVER, SINCE OCTOBER OF 1989, TREATED WATER IS BEING PUMPED TO THE SOUTH WALNUT CREEK DRAINAGE AND FLOWS OFF SITE VIA THE BROOMFIELD DIVERSION CANAL.

FLOW IN WOMAN CREEK AND THE SOUTH INTERCEPTOR DITCH IS INTERMITTENT. THIS HAS BEEN OBSERVED BY FIELD INVESTIGATION CREWS SINCE 1986 AND IS INDICATIVE OF FREQUENT INTERACTION WITH THE SHALLOW GROUNDWATER SYSTEM.

2.2.3.2 GROUND WATER

GROUND WATER OCCURS IN SURFICIAL MATERIALS (ROCKY FLATS ALLUVIUM, COLLUVIUM, AND VALLEY FILL ALLUVIUM) AND IN ARAPAHOE SANDSTONES AND CLAYSTONES AT OU 2. THESE TWO FLOW SYSTEMS, WHICH ARE HYDRAULICALLY CONNECTED AT SHALLOWER PORTIONS OF THE ARAPAHOE FORMATION, ARE DISCUSSED SEPARATELY BELOW.

GROUND WATER IN SURFICIAL MATERIALS

GROUND WATER IS PRESENT IN THE ROCKY FLATS ALLUVIUM, COLLUVIUM, AND VALLEY FILL ALLUVIUM UNDER UNCONFINED CONDITIONS. RECHARGE TO THE WATER

TABLE OCCURS AS INFILTRATION OF INCIDENT PRECIPITATION AND AS SEEPAGE FROM DITCHES AND CREEKS. IN ADDITION, DETENTION PONDS ALONG SOUTH WALNUT CREEK AND WOMAN CREEK RECHARGE THE VALLEY FILL ALLUVIUM. FIGURE 2-7 SHOWS THE POTENTIOMETRIC SURFACE OF UPPERMOST GROUND WATER MEASURED BETWEEN APRIL 4 AND APRIL 8, 1988, AND THE LOCATIONS OF ALLUVIAL AND BEDROCK WELLS IN THE VICINITY OF OU 2.

THE SHALLOW GROUNDWATER FLOW SYSTEM IS QUITE DYNAMIC, WITH LARGE WATER LEVEL CHANGES OCCURRING IN RESPONSE TO PRECIPITATION EVENTS AND STREAM AND DITCH FLOW. FOR EXAMPLE, BETWEEN MID-APRIL AND SEPTEMBER, 1986, WATER LEVELS IN WELLS 1-86 AND 4-86 (COMPLETED IN VALLEY FILL ALLUVIUM) DROPPED MORE THAN FOUR AND EIGHT FEET, RESPECTIVELY. ALLUVIAL WATER LEVELS ARE HIGHEST DURING THE MONTHS OF MAY AND JUNE. WATER LEVELS DECLINE DURING LATE SUMMER AND FALL, AND SOME WELLS GO COMPLETELY DRY AT THIS TIME OF YEAR. GROUNDWATER FLOW IN THE ROCKY FLATS ALLUVIUM IS GENERALLY FROM WEST TO EAST, FOLLOWING THE SURFACE OF THE CLAYSTONE BEDROCK.

ALLUVIAL GROUND WATER DISCHARGES TO SEEPS, SPRINGS, SURFACE WATER DRAINAGES, AND SUBCROPPING ARAPAHOE SANDSTONE AT OU 2. SEEPS AND SPRINGS OCCUR ALONG THE EDGE OF THE ROCKY FLATS ALLUVIUM TERRACE (AT THE ALLUVIUM/BEDROCK CONTACT) AND ON THE SIDE SLOPES OF THE TERRACE. SEEPS AND SPRINGS ON THE TERRACE SIDE SLOPES MAY BE DUE TO THINNING OF COLLUVIAL MATERIALS. GROUND WATER IN COLLUVIAL MATERIALS SOUTH OF THE 903 PAD AND EAST TRENCHES AREAS DISCHARGES TO THE SOUTH INTERCEPTOR DITCH, AND GROUND WATER IN VALLEY FILL MATERIALS DISCHARGES TO WOMAN OR SOUTH WALNUT CREEKS.

HYDRAULIC CONDUCTIVITY VALUES WERE ESTIMATED FOR SURFICIAL MATERIALS FROM DRAWDOWN-RECOVERY TESTS PERFORMED ON 1986 WELLS DURING THE INITIAL

SITE CHARACTERIZATION AND FROM SLUG TESTS PERFORMED ON SELECTED 1986 AND 1987 WELLS DURING THE PHASE I RI (ROCKWELL INTERNATIONAL, 1987A). THE AVERAGE GROUNDWATER VELOCITIES IN THE ROCKY FLATS ALLUVIUM, WOMAN CREEK VALLEY FILL ALLUVIUM, AND SOUTH WALNUT CREEK VALLEY FILL ALLUVIUM ARE 84 FT/YR, 145 FT/YR, AND 20 FT/YR, RESPECTIVELY (ROCKWELL INTERNATIONAL, 1987A). THESE VALUES ARE BASED ON A HORIZONTAL GRADIENT OF 0.02 FEET/FEET (FT/FT), AN EFFECTIVE POROSITY OF 0.1, AND MEAN HYDRAULIC CONDUCTIVITIES OF 4 X (10-4), 7 X (10-4) AND 9.5 X (10-5) CM/S FOR ROCKY FLATS, WOMAN CREEK VALLEY FILL AND SOUTH WALNUT CREEK VALLEY FILL ALLUVIUM, RESPECTIVELY. THE CALCULATIONS ASSUME YEAR-ROUND SATURATION. HOWEVER, AS DISCUSSED ABOVE, PORTIONS OF THE ROCKY FLATS ALLUVIUM, COLLUVIUM, AND VALLEY FILL ALLUVIUM ARE NOT CONTINUOUSLY SATURATED. THUS, THE SHALLOW GROUND WATER MUST FLOW AT LESS THAN THE CALCULATED ANNUAL AVERAGE VELOCITIES. THE REACTIVITY OF DISSOLVED CONSTITUENTS COULD FURTHER REDUCE CONTAMINANT MIGRATION RATES BELOW ESTIMATED GROUNDWATER VELOCITIES.

BEDROCK GROUND WATER

THE GREATEST POTENTIAL FOR GROUNDWATER FLOW IN THE ARAPAHOE FORMATION OCCURS IN THE MEANDERING LENTICULAR SANDSTONES CONTAINED WITHIN THE CLAYSTONES (I.E., THE BASAL FORMATION) DUE TO THEIR RELATIVELY HIGHER PERMEABILITY. FLOW WITHIN INDIVIDUAL SANDSTONES IS ASSUMED TO BE FROM WEST TO EAST, BUT THE GEOMETRY OF THE BEDROCK GROUNDWATER FLOW PATH IS NOT FULLY UNDERSTOOD AT THIS TIME DUE TO ITS DEPENDENCE UPON THE CONTINUITY OF THE SANDSTONES AND THEIR HYDRAULIC INTERCONNECTION (ROBSON, 1981A). GROUNDWATER RECHARGED TO SANDSTONES OCCURS AS

INFILTRATION FROM ALLUVIAL GROUND WATER WHERE SANDSTONES SUBCROP BENEATH THE ALLUVIUM AND BY LEAKAGE FROM CLAYSTONES OVERLYING THE SANDSTONES. GROUNDWATER FROM THE BASAL FORMATION OF THE ARAPAHOE AQUIFER IS USED FOR IRRIGATION, LIVESTOCK, WATERING, AND DOMESTIC PURPOSES. WELLS ARE LOCATED EAST OF THE RFP WITHIN THE DENVER BASIN.

THERE IS A STRONG DOWNWARD GRADIENT BETWEEN GROUND WATER IN SURFICIAL MATERIALS AND BEDROCK. VERTICAL GRADIENTS RANGE FROM 0.31 FT/FT BETWEEN WELLS 35-86 AND 34-86 TO 1.05 FT/FT BETWEEN WELLS 41-86 AND 40-86. THESE GRADIENTS IMPLY A RELATIVELY HIGH HYDRAULIC CONDUCTIVITY CONTRAST BETWEEN THE SURFICIAL MATERIALS AND BEDROCK, WHICH IS SUPPORTED BY HYDRAULIC CONDUCTIVITY TEST RESULTS.

FLOW WITHIN SANDSTONES IS REGIONALLY WEST TO EAST. THE GEOMETRY OF THE GROUNDWATER FLOW PATH IN THE BEDROCK IS NOT FULLY UNDERSTOOD AT THIS TIME BECAUSE IT DEPENDS UPON THE CONTINUITY OF THE SANDSTONES AND THEIR INTERCONNECTION. EVALUATION OF THE LATERAL EXTENT AND DEGREE OF INTERCONNECTION OF THE SANDSTONE UNITS IS A PRIMARY GOAL OF THE PHASE II AND PHASE III REMEDIAL INVESTIGATIONS FOR OU 2.

HYDRAULIC CONDUCTIVITY VALUES FOR ARAPAHOE SANDSTONES WERE ESTIMATED FROM DRAWDOWN-RECOVERY TESTS PERFORMED IN 1986, SLUG TESTS PERFORMED IN 1987, AND PACKER TESTS PERFORMED IN 1986 AND 1987. THE MAXIMUM

HORIZONTAL GROUNDWATER FLOW VELOCITY IN SANDSTONE IS 75 FT/YR USING A HYDRAULIC CONDUCTIVITY OF 83 FT/YR, A HORIZONTAL GRADIENT OF 0.09 FT/FT, AND AN ASSUMED EFFECTIVE POROSITY OF 0.1.

2.2.4 ECOLOGY

WITHIN THE PLANT BOUNDARIES A VARIETY OF VEGETATION THRIVES. INCLUDED ARE SPECIES OF FLORA REPRESENTATIVE OF TALL GRASS PRAIRIE, SHORT GRASS PLAINS, LOWER MONTANE, AND FOOTHILL RAVINE REGIONS, WITH NONE BEING ON THE ENDANGERED SPECIES LIST. IT IS EVIDENT THAT THE VEGETATIVE COVER ALONG THE FRONT RANGE OF THE ROCKY MOUNTAINS HAS BEEN RADICALLY ALTERED BY HUMAN ACTIVITIES SUCH AS BURNING, TIMBER CUTTING, ROAD BUILDING, AND OVERGRAZING FOR MANY YEARS. SINCE THE ACQUISITION OF THE RFP PROPERTY, VEGETATIVE RECOVERY HAS OCCURRED AS EVIDENCED BY THE PRESENCE OF GRASSES LIKE BIG BLUESTEM AND SIDEOATS GRAMA (TWO DISTURBANCE-SENSITIVE SPECIES). NO VEGETATIVE STRESSES ATTRIBUTABLE TO HAZARDOUS WASTE CONTAMINATION HAVE BEEN IDENTIFIED (DOE, 1980).

THE ANIMAL LIFE INHABITING THE RFP AND ITS BUFFER ZONE CONSISTS OF SPECIES ASSOCIATED WITH WESTERN PRAIRIE REGIONS. THE MOST COMMON LARGE MAMMAL IS THE MULE DEER, WITH AN ESTIMATED 100 TO 125 PERMANENT RESIDENTS. THERE ARE A NUMBER OF SMALL CARNIVORES, SUCH AS THE COYOTE, RED FOX, STRIPED SKUNK, AND LONG-TAILED WEASEL. A PROFUSION OF SMALL HERBIVORE SPECIES CAN BE FOUND THROUGHOUT THE PLANT AND BUFFER ZONE CONSISTING OF SPECIES SUCH AS THE POCKET GOPHER, WHITE-TAILED JACKRABBIT, AND THE MEADOW VOLE (DOE, 1980).

COMMONLY OBSERVED BIRDS INCLUDE WESTERN MEADOWLARKS, HORNED LARKS, MOURNING DOVES, AND VESPER SPARROW. A VARIETY OF DUCKS, KILLDEER, AND RED-WINGED BLACKBIRDS ARE SEEN IN AREAS ADJACENT TO PONDS. MALLARDS AND OTHER DUCKS FREQUENTLY NEST AND RAISE YOUNG ON SEVERAL OF THE PONDS. COMMON BIRDS OF PREY IN THE AREA INCLUDE MARSH HAWKS, RED-TAILED HAWKS, FERRUGINOUS HAWKS, ROUGH-LEGGED HAWKS, AND GREAT HORNED OWLS (DOE, 1980).

BULL SNAKES AND RATTLESNAKES ARE THE MOST FREQUENTLY OBSERVED REPTILES. EASTERN YELLOW-BELLIED RACERS HAVE ALSO BEEN SEEN. THE EASTERN SHORT-HORNED LIZARD HAS BEEN REPORTED ON THE SITE, BUT THESE AND OTHER LIZARDS ARE NOT COMMONLY OBSERVED. THE WESTERN PAINTED TURTLE AND THE WESTERN PLAINS GARTER SNAKE ARE FOUND IN AND AROUND MANY OF THE PONDS (DOE, 1980).

2.2.5 SENSITIVE ENVIRONMENTS AND ENDANGERED SPECIES

THE ENDANGERED SPECIES ACT OF 1973 (PUBLIC LAW 93-0205), AS AMENDED, PROVIDES THAT ALL FEDERAL AGENCIES IMPLEMENT PROGRAMS FOR THE CONSERVATION OF LISTED ENDANGERED AND THREATENED SPECIES. FEDERAL AGENCIES MUST ENSURE THAT ACTIONS AUTHORIZED, FUNDED, OR CARRIED OUT BY THEM WILL NOT JEOPARDIZE THE CONTINUED EXISTENCE OF ANY ENDANGERED OR THREATENED SPECIES.

THE US FISH AND WILDLIFE SERVICE (USFWS) HAS INDICATED THAT THE TWO ENDANGERED SPECIES OF INTEREST IN THE RFP AREA ARE THE BALD EAGLE AND THE BLACK-FOOTED FERRET (ROCKWELL INTERNATIONAL, 1988C). PRAIRIE DOG TOWNS PROVIDE THE FOOD SOURCE AND HABITAT FOR FERRETS. SINCE THERE ARE NO PRAIRIE DOG TOWNS IN OR NEAR THE 881 HILLSIDE AREA WHICH IS NEAR THE 903 PAD, MOUND AND EAST TRENCHES, THE USFWS HAS DETERMINED THAT FERRETS PROBABLY DO NOT EXIST IN THE INVESTIGATION AREA. BALD EAGLES ARE OCCASIONAL VISITORS TO THE AREA, PRIMARILY DURING MIGRATION TIMES. SIGHTINGS ARE RARE AND LITTLE SUITABLE HABITAT EXISTS ON THE RFP SITE OTHER THAN SOME PERCHING LOCATIONS. NO NESTS ARE FOUND ON THE RFP SITE. THE PROPOSED ACTION WILL NOT ADVERSELY AFFECT THE BALD EAGLE. THE USFWS HAS CONCURRED WITH THESE FINDINGS SUBSEQUENT TO A FIELD VISIT ON 15 JUNE 1988 (ROCKWELL INTERNATIONAL, 1988C).

OTHER ANIMAL SPECIES OF INTEREST THAT EXIST IN THE RFP AREA INCLUDE BURROWING OWLS AND SWAINSON'S HAWKS. COTTONWOOD TREES WITHIN APPROXIMATELY ONE QUARTER MILE OF THE 903 PAD, MOUND, AND EAST TRENCHES AREAS WERE INVESTIGATED TO DETERMINE IF ANY RAPTOR NESTS EXIST AND NONE WERE FOUND. THE NEAREST POPULATION OF BURROWING OWLS IS APPROXIMATELY TWO MILES TO THE EAST. THE NEAREST POPULATION OF SWAINSON'S HAWKS COULD BE IN THE COTTONWOOD TREES IN THE AREA OF THE NORTH WALNUT CREEK OR ROCK CREEK DRAINAGES, NORTH OF THE 881 HILLSIDE AREA.

THE 903 PAD, MOUND, AND EAST TRENCHES AREAS ARE NOT USED, NOR INTENDED FOR USE, AS A PUBLIC OR RECREATIONAL AREA, NOR FOR THE DEVELOPMENT OF ANY UNIQUE NATURAL RESOURCE. NO UNIQUE ECOSYSTEMS WERE FOUND AT THE RFP DURING EXTENSIVE BIOLOGICAL STUDIES (DOE, 1980).

2.2.6 WETLANDS

INITIAL CONSULTATION WITH THE USFWS AND THE US ARMY CORPS OF ENGINEERS WAS CONDUCTED IN THE SPRING OF 1988. WETLANDS AT THE RFP SITE WERE DELINEATED. THE PROPOSED ACTION IS NOT LOCATED IN THE DELINEATED WETLANDS. AERIAL PHOTOGRAPHY IMAGERY FOR THE 903 PAD, MOUND, AND EAST TRENCHES AREAS WAS EXAMINED FOR WETLANDS IDENTIFICATION FOLLOWED BY LIMITED SITE INSPECTION (EG&G, 1990B). TWO ISOLATED STANDS OF WETLANDS VEGETATION CONTAINING COMMON CAT-TAIL (TYPHA LATIFOLIA) WERE LOCATED PRIMARILY WITHIN IHSS 140, WHERE GROUND WATER FLOWING TOWARD THE TERRACE EDGES EMERGES AS SEEPS OR SPRINGS AT THE CONTACT BETWEEN THE ALLUVIUM AND BEDROCK. THE TWO AREAS ARE EACH LESS THAN 20 SQUARE FEET IN SIZE.

LINEAR WETLANDS AREAS HAVE BEEN IDENTIFIED ALONG BOTH THE WOMAN CREEK AND SOUTH INTERCEPTOR DITCH DRAINAGE AREAS. THESE DRAINAGES COLLECT SURFACE WATER UPGRADIENT FROM OU 2 AND DELIVER THE WATER TO POND C-2 FOR TREATMENT. EVENLY-SPACED DROP STRUCTURES ALONG THE SOUTH INTERCEPTOR DITCH HAVE LOWERED FLOW VELOCITIES, INCREASED SEDIMENT ACCUMULATION, AND CREATED FAIRLY DENSE LINEAR STANDS OF WETLANDS. FROM A POINT DUE SOUTH OF BUILDING 881 AND EXTENDING TO THE C-2 POND, APPROXIMATELY 0.15 ACRES OF WETLAND ARE CONTAINED WITHIN THIS PORTION OF THE SOUTH INTERCEPTOR

DITCH. WETLAND SPECIES OBSERVED WERE PRIMARILY CATTAILS (GREATER THAN 95 PERCENT PREDOMINANCE), SPIKE RUSH (ELEOCHARIS MACROSTACHYA) AND BULLRUSH (SCIRPUS AMERICANUS). THE WETLANDS FUNCTION PRIMARILY AS FLOW ATTENUATION FEATURES WITH ADDITIONAL MINOR CONTRIBUTIONS TO WILDLIFE HABITAT AND WATER QUALITY ENHANCEMENT. DRAINAGE CONTRIBUTION TO THE SOUTH INTERCEPTOR DITCH FROM OU 2 IS MINIMAL.

2.2.7 HISTORIC SITES

THE NATIONAL HISTORIC PRESERVATION ACT OF 1966 (PUBLIC LAW 89-665) TOGETHER WITH SUBSEQUENT LAW AMENDMENTS (PUBLIC LAWS 91-243, 93-54, 94-422, 94-458) PROVIDES THAT ALL FEDERAL AGENCIES IMPLEMENT PROGRAMS FOR THE PROTECTION OF ARCHEOLOGICAL AND HISTORICAL RESOURCES.

THE 903 PAD, MOUND AND EAST TRENCHES AREAS HAVE BEEN HIGHLY DISTURBED OVER A NUMBER OF YEARS. DUE TO THIS DISTURBANCE AND THE TOPOGRAPHIC POSITION OF THE SUBJECT AREA, THE STATE OFFICE OF ARCHEOLOGY AND HISTORIC PRESERVATION HAS DETERMINED THAT THIS ACTION WILL NOT IMPACT CULTURAL RESOURCES (BURNEY, 1989). AN ARCHAEOLOGICAL AND HISTORICAL SURVEY OF THE RFP WAS CONDUCTED BETWEEN JULY 18 AND AUGUST 22, 1988, WHICH DETERMINED TWO SITES HAVE POTENTIAL ELIGIBILITY TO THE NATIONAL REGISTER OF HISTORIC PLACES. HOWEVER, INSUFFICIENT INFORMATION CURRENTLY EXISTS TO MAKE THIS DETERMINATION. THESE TWO SITES ARE LOCATED NORTHWEST AND SOUTHWEST OF THE INVESTIGATION AREA AND WILL NOT BE DISTURBED BY THE PROPOSED ACTION (BURNEY, 1989).

2.3 CONTAMINANTS -- DESCRIPTION AND SOURCES

2.3.1 BACKGROUND CHARACTERIZATION

IN ORDER TO FACILITATE THE INTERPRETATION OF CHEMICAL RESULTS IN NON-BACKGROUND AREAS, A BACKGROUND CHARACTERIZATION PROGRAM HAS BEEN IMPLEMENTED TO DEFINE THE SPATIAL AND TEMPORAL VARIABILITY OF NATURALLY OCCURRING CONSTITUENTS. FIELDWORK WAS CONDUCTED IN 1989, AND A DRAFT BACKGROUND GEOCHEMICAL CHARACTERIZATION REPORT WAS PREPARED AND SUBMITTED TO THE REGULATORY AGENCIES ON DECEMBER 15, 1989 (ROCKWELL INTERNATIONAL, 1989C). THE DOCUMENT SUMMARIZES THE BACKGROUND DATA FOR GROUND WATER, SURFACE WATER, SEDIMENTS, AND GEOLOGIC MATERIALS, AND IDENTIFIES PRELIMINARY STATISTICAL BOUNDARIES OF BACKGROUND VARIABILITY. SPATIAL VARIATIONS IN THE CHEMISTRY OF GEOLOGIC MATERIALS AND WATER WERE ADDRESSED BY PLACING SAMPLE LOCATIONS THROUGHOUT BACKGROUND AREAS AT THE PLANT. THE GOAL OF EVALUATING TEMPORAL VARIATIONS IN WATER CHEMISTRY HAS NOT YET BEEN ACHIEVED BECAUSE AT LEAST TWO YEARS OF QUARTERLY DATA ARE NEEDED.

THE DRAFT REPORT HAS BEEN UPDATED BY INCORPORATION OF ANALYTICAL DATA THAT WERE UNAVAILABLE IN DECEMBER 1989, INCLUDING ADDITIONAL ROUNDS OF GROUNDWATER AND SURFACE WATER SAMPLES FOR WHICH LABORATORY ANALYSES WERE

NOT AVAILABLE. THE INFORMATION IN THE DRAFT BACKGROUND GEOCHEMICAL REPORT HAS BEEN USED TO PRELIMINARILY CHARACTERIZE INORGANIC

CONTAMINATION AT THE 903 PAD, MOUND, AND EAST TRENCHES AREAS. THE DRAFT REPORT PRESENTS TOLERANCE INTERVALS FOR SURFACE WATER, SEDIMENT, AND VARIOUS SOIL LITHOLOGIES AND HYDROGEOLOGIC UNITS (GROUND WATER). THE TOLERANCE INTERVALS ARE STATISTICAL RANGES OF THE BACKGROUND ANALYTE CONCENTRATIONS IN THE VARIOUS MEDIA THAT REPRESENT 95 PERCENT OF THE POPULATION WITH 95 PERCENT CONFIDENCE. SUMMARY TABLES OF THE UPPER LIMITS OF THESE TOLERANCE INTERVALS ARE PROVIDED IN TABLES A-1 THROUGH A-4 (SEE APPENDIX A) FOR REFERENCE.

2.3.2 GROUNDWATER CONTAMINATION

GROUND WATER AT THE RFP HAS BEEN MONITORED SINCE 1986. WELLS HAVE BEEN INSTALLED THROUGHOUT THE PROPERTY AND ARE SAMPLED QUARTERLY. THE FOLLOWING DISCUSSION IS BASED ON THE RESULTING DATA.

2.3.2.1 VOLATILE ORGANIC CONTAMINATION

TABLE A-5 (APPENDIX A) PRESENTS ALL VOLATILE ORGANIC COMPOUNDS (VOCS) WITH CONCENTRATIONS THAT ARE ABOVE DETECTION LIMITS IN THE UNCONFINED GROUNDWATER SYSTEM DURING THE SECOND QUARTER OF 1989. THESE ARE THE MOST RECENT VALIDATED DATA PERTAINING TO THE SAME SEASON FOR WHICH THE BACKGROUND LEVELS WERE DETERMINED. MAXIMUM CONCENTRATIONS OF VOLATILE ORGANICS BASED ON THE COMPLETE DATA SET (1986-1989 SAMPLING) ARE SUMMARIZED IN TABLE A-6. THE PRIMARY VOLATILE ORGANIC GROUNDWATER CONTAMINANTS (CCL4, PCE, AND TCE) ARE PORTRAYED WITH ISOPLETHS IN FIGURES 2-8 THROUGH 2-10 BASED ON SECOND QUARTER 1989 DATA FOR BOTH UNCONFINED ALLUVIAL AND BEDROCK WELLS.

THE DATA IN TABLES A-5 AND A-6 CONFIRM THE RELATIVE DOMINANCE OF CCL4, PCE AND TCE IN ALLUVIAL AND SHALLOW BEDROCK GROUND WATER AT OU 2 COMPARED TO OTHER VOLATILE ORGANIC COMPOUNDS, AND DOCUMENTS OCCURRENCES OF
1,1-DICHLOROETHANE (1,1-DCA), 1,1-DICHLOROETHENE (1,1-DCE), 1,2-DICHLOROETHENE (1,2-DCE), AND VINYL CHLORIDE (ALL ARE POSSIBLE DEGRADATION PRODUCTS OF THE PRINCIPAL CONTAMINANTS), AND 1,1,1-TCA, TOTAL-1,2-DCE, 2-HEXANONE, CHCL3, METHYLENE CHLORIDE, ACETONE AND CARBON DISULFIDE. THE LATTER FOUR ANALYTES WERE REPORTED AT LEVELS BELOW DETECTION LIMIT AND THEREFORE REPRESENT ONLY ESTIMATED VALUES.

THE DISTRIBUTION OF THE PRINCIPAL CONTAMINANTS SUGGESTS THAT THE 903 PAD IS THE MAIN SOURCE OF CCL4, WITH POSSIBLE CONTRIBUTIONS FROM THE NORTHERN EAST TRENCHES. THE MOUND AREA IS THE MAIN SOURCE OF PCE, AND TCE OCCURS THROUGHOUT OU 2 IMPLYING MULTIPLE SOURCES. THE PHASE II WORK PLAN FOR THIS SITE DISCUSSES VOLATILE ORGANIC GROUNDWATER CONTAMINATION IN FURTHER DETAIL (EG&G, 1990A).

2.3.2.2 INORGANIC CONTAMINATION

MAJOR IONS

MAJOR IONS AND TOTAL DISSOLVED SOLIDS (TDS) ARE SOMEWHAT ELEVATED ABOVE

BACKGROUND THROUGHOUT AND DOWNGRADIENT OF THE 903 PAD, MOUND AND EAST TRENCHES AREAS (TABLE A-7, APPENDIX A). TOTAL DISSOLVED SOLIDS TYPICALLY RANGED BETWEEN 400 AND 1000 MILLIGRAMS PER LITER (MG/L); CHLORIDE WAS GENERALLY 30-100 MG/L, NITRATE WAS 2-10 MG/L, AND MOST SULFATE CONCENTRATIONS WERE BETWEEN 10 AND 100 MG/L IN THE SECOND QUARTER OF 1989. IN GENERAL, MAJOR CATIONS WERE ACCORDINGLY ELEVATED. THE HIGHEST CONCENTRATIONS OF MAJOR IONS ARE IN WELL 29-87 SOUTHEAST OF THE 903 PAD, ALTHOUGH GROUND WATER AT THE NORTHERNMOST WELLS (34-87 AND 35-87) WAS ALSO QUITE HIGH IN TDS (APPROXIMATED 1000 MG/L).

METALS

ALUMINUM, ANTIMONY, ARSENIC, BARIUM, CADMIUM, CHROMIUM, COPPER, IRON, LEAD, LITHIUM, MANGANESE, MERCURY, MOLYBDENUM, NICKEL, POTASSIUM, SELENIUM, SILVER, STRONTIUM, VANADIUM AND ZINC EXCEEDED BACKGROUND IN ONE OR MORE WELLS IN THE SECOND QUARTER OF 1989. TABLE A-8 (APPENDIX A), A SUMMARY OF MULTIPLE SAMPLING EVENTS (UP TO FOURTEEN SAMPLES COLLECTED FROM EACH WELL DURING 1987-1989), SHOWS THAT ONLY A SUBSET OF THESE ANALYTES REPEATEDLY EXCEED BACKGROUND (UPPER LIMIT OF THE TOLERANCE INTERVAL) AND/OR EXCEED BACKGROUND BY A WIDE MARGIN. THE SPORADIC EXCEEDANCES OF BACKGROUND, AND THE ABSENCE OF APPARENT GRADIENTS IN METAL CONCENTRATIONS WITH RESPECT TO IHSSS, HINDERS DRAWING DEFINITE CONCLUSIONS AS TO WHETHER THESE CONSTITUENTS ARE DERIVED FROM IHSSS (EG&G, 1990A). SECTION 2.3.5 MAKES REFERENCE TO THIS AND OTHER AMBIGUITIES IN THE GROUNDWATER CHEMISTRY DATA TO THE EXTENT THAT THEY MAY BE RELEVANT TO THE SURFACE WATER IM/IRA PLAN.

RADIONUCLIDES

TABLE A-9 (APPENDIX A) SHOWS THAT DISSOLVED CONCENTRATIONS OF THE URANIUM ISOTOPES (U-234, U-235, AND U-238), PLUTONIUM, AND AMERICIUM HAVE BEEN ABOVE BACKGROUND AT OU 2. THE MAXIMUM CONCENTRATION FOR URANIUM 238 WAS 28 PLUS OR MINUS 2 PCI/L IN WELL 12-87 IN THE 903 PAD AREA. NUMEROUS OCCURRENCES OF URANIUM AT LOWER CONCENTRATIONS AND IN WELLS COMPLETED IN DIVERSE LITHOLOGIES DEMONSTRATE THAT THE DISTRIBUTION OF URANIUM IS NOT THOROUGHLY DELINEATED AT OU 2. WITH RESPECT TO PLUTONIUM AND AMERICIUM, RESULTS AT WELLS 15-87 AND 11-87 WERE THE MOST ELEVATED (PLUTONIUM 0.522 PLUS OR MINUS 0.117 PCI/L AND 0.199 PLUS OR MINUS 0.07 PCI/L, RESPECTIVELY; AMERICIUM 0.831 PLUS OR MINUS 0.148 PCI/L AND 0.06 PLUS OR MINUS 0.05 PCI/L, RESPECTIVELY).

2.3.3 SOIL CONTAMINATION

THE EXTENT OF SOIL CONTAMINATION AT THE 903 PAD, MOUND, AND EAST TRENCHES AREAS WAS DETERMINED FROM SOIL SAMPLES COLLECTED IN 1987 DURING THE PHASE I RI. SAMPLES WERE COLLECTED FROM BOREHOLES DRILLED IN AND ADJACENT TO KNOWN IHSS LOCATIONS (FIGURE 2-11). TWO-FOOT INTERVALS WERE COMPOSITED FOR ORGANIC ANALYSES, AND TWO- TO TEN-FOOT INTERVALS WERE COMPOSITED FOR ALL OTHER ANALYTES. BOREHOLES WERE NOT DRILLED INTO

SITES STILL CONTAINING WASTES (THE TRENCHES AND 903 PAD) DUE TO POTENTIAL HEALTH HAZARDS TO FIELD WORKERS AND POTENTIAL FOR RELEASE OF WASTE CONSTITUENTS TO THE ENVIRONMENT. THE SOILS DATA ARE SUMMARIZED HERE BECAUSE OF THE POTENTIAL INFLUENCES CONTAMINATED SOILS MAY HAVE ON SURFACE WATER QUALITY. EITHER DIRECT CONTRIBUTIONS VIA OVERLAND RUNOFF, OR DIRECT INFLUENCES VIA GROUNDWATER INTERACTIONS ARE POSSIBLE. THE DISCUSSION IS CONSIDERED PRELIMINARY BECAUSE WASTES WERE NOT DIRECTLY SAMPLED AND SOILS DATA ARE STILL BEING EVALUATED.

VOCS, INCLUDING PCE, TCE, TOLUENE, 2-BUTANONE, CCL4, ACETONE AND METHYLENE CHLORIDE, WERE REPORTED IN SAMPLES FROM THE 903 PAD AND EAST TRENCHES AREAS (SEE TABLE A-10). OCCURRENCES OF TOTAL XYLENES, ETHYLBENZENE AND TOLUENE WERE ALSO REPORTED FOR THE 903 PAD AREA, WHEREAS 1-2-DICHLOROETHANE (1,2-DCA), 1,1,1-TCA, AND 1,1,2-TCA WERE REPORTED IN AN EAST TRENCHES BOREHOLE. THE MOUND AREA, LIKE OTHER PORTIONS OF OU 2, CONTAINED ACETONE (HUNDREDS OF G/L) AND METHYLENE CHLORIDE (TYPICALLY TENS OF G/L) AT CONCENTRATIONS TOO LOW TO UNAMBIGUOUSLY DEMONSTRATE CONTAMINATION WITH THESE COMPOUNDS. OTHER ORGANIC CONSTITUENTS IN THE MOUND AREA (PCE, CHCL3, 1,2-DCA) WERE LESS NUMEROUS AND AT LOWER LEVELS THAN AT OTHER AREAS WITHIN OU 2.
SEMI-VOLATILE ORGANIC COMPOUNDS

DI-N-BUTYL PHTHALATE, BIS(2-ETHYLHEXYL) PHTHALATE, AND N-NITROSODIPHENYLAMINE WERE DETECTED IN NUMEROUS BOREHOLES THROUGHOUT OU 2 (SEE TABLE A-11, APPENDIX A).

SEVERAL METALS OCCURRED ABOVE BACKGROUND IN SOIL SAMPLES (ALUMINUM, ARSENIC, BARIUM, CADMIUM, CALCIUM, IRON, MERCURY, MANGANESE, LEAD, ANTIMONY, VANADIUM AND ZINC), ALTHOUGH MOST EXCEEDED BACKGROUND BY LESS THAN A FACTOR OF TWO AND/OR IN ONLY ONE OR TWO SAMPLES. TABLE A-12 (APPENDIX A) PRESENTS MAXIMUM METAL CONCENTRATIONS IN SOILS.

PLUTONIUM AND AMERICIUM ARE THE PRINCIPAL RADIONUCLIDE CONTAMINANTS EXHIBITING ELEVATED CONCENTRATIONS IN SOILS. TABLE A-13 (APPENDIX A) PRESENTS MAXIMUM RADIONUCLIDE CONCENTRATIONS IN SOILS AT OU 2. HIGHEST CONCENTRATIONS OCCURRED IN SAMPLES THAT INCLUDED THE SURFACE. BECAUSE MANY OF THE SURFACE SOIL SAMPLES WERE MIXED INTO LARGE COMPOSITES, THE PHASE I RI DATA DO NOT RULE OUT THE PRESENCE OF RADIONUCLIDES OTHER THAN PLUTONIUM AND AMERICIUM. CESIUM-137, TRITIUM, AND URANIUM WERE DETECTED, ALBEIT AT NEAR-BACKGROUND CONCENTRATIONS AND IN FEWER THAN TEN SAMPLES. SURFACE CONTAMINATION OF SOILS WITH PLUTONIUM AND AMERICIUM WAS FURTHER DEMONSTRATED BY A RECENT AERIAL RADIOLOGICAL SURVEY (EG&G, 1989). THE RADIOACTIVITY DETECTED IN THAT SURVEY WAS ASSOCIATED WITH KNOWN RADIOACTIVE MATERIAL STORAGE AND HANDLING AREAS (I.E., THE 903 PAD), AND WAS ATTRIBUTED TO PLUTONIUM, AMERICIUM, AND A URANIUM DECAY PRODUCT. THE SURVEY INDICATED ELEVATED CONCENTRATIONS OF AMERICIUM IN SOILS EAST OF THE 903 PAD LIP SITE AS HIGH AS 97 PCI/G, AND BY INFERENCE FROM THEIR EXPECTED ACTIVITY RATIO, PLUTONIUM AS HIGH AS 500 PCI/G. SUBSEQUENT ANALYSIS OF SAMPLES FROM THE AREA WITH HIGH AMERICIUM CONCENTRATIONS INDICATED PLUTONIUM CONCENTRATIONS AS HIGH AS 457 PCI/G.

THE CESIUM-137 ACTIVITY WAS AT A LEVEL CONSISTENT WITH GLOBAL FALLOUT AND NOT ENRICHED IN THE PLANT AREA.

2.3.4 SEDIMENT CONTAMINATION

SEDIMENTS IN WOMAN CREEK AND SOUTH WALNUT CREEK WERE SAMPLED IN THE FALL OF 1986, AND IN MARCH AND OCTOBER OF 1989. STATIONS SED-28, SED-29, AND SED-25 ARE LOCATED WITHIN THE SOUTH INTERCEPTOR DITCH IN THE WOMAN CREEK DRAINAGE (FIGURE 2-12). SED-30 AND SED-31 ARE SEEPS ON THE SOUTH INTERCEPTOR DITCH BERM NEAR STATION SED-29. SED-27 AND SED-26 ARE ALONG WOMAN CREEK JUST UPSTREAM OF POND C-2. STATIONS SED-11, SED-12, AND SED-13 ARE LOCATED ALONG SOUTH WALNUT CREEK. SED-11 IS THE MOST UPGRADIENT STATION, SED-12 IS JUST UPSTREAM OF POND B-1, AND SED-13 IS JUST DOWNSTREAM OF POND B-5. STATIONS SED-1 AND SED-2 ON WOMAN CREEK AND AN EPHEMERAL TRIBUTARY, RESPECTIVELY, ARE BOTH DOWNSTREAM OF OU 2,

JUST WEST OF INDIANA STREET WITHIN THE BOUNDARY OF THE BUFFER ZONE (EAST OF AREA DEPICTED BY FIGURE 2-12).

2.3.4.1 WOMAN CREEK DRAINAGE

VOCS WERE DETECTED IN SAMPLES FROM THE SEDIMENTS IN THE WOMAN CREEK DRAINAGE (TABLE A-14, APPENDIX A). CHLOROMETHANE WAS PRESENT AT SED-29 (60 G/KG), AND CHLOROFORM WAS REPORTED AT SED-31 (18 G/KG). SEVERAL SEDIMENT SAMPLES CONTAINED METHYLENE CHLORIDE AND ACETONE AT VERY LOW CONCENTRATIONS. THESE COMPOUNDS WERE FREQUENTLY FOUND IN ASSOCIATED BLANKS. SED-30 CONTAINED 220 G/KG ACETONE AT ONE SAMPLING, BUT ACETONE WAS ALSO PRESENT IN THE BLANK FOR THIS SAMPLE AND WAS UNDETECTED IN TWO OTHER SAMPLING EVENTS FOR THIS STATION IN 1989. ACETONE AND METHYLENE CHLORIDE RESULTS IN THIS AREA ARE BELIEVED TO BE LABORATORY ARTIFACTS. THE ONLY OTHER VOLATILE ORGANIC COMPOUNDS DETECTED IN THE WOMAN CREEK DRAINAGE SEDIMENT SAMPLES WERE TCE (8 G/KG) AT SED-31 (ESTIMATED BELOW DETECTION LIMITS ELSEWHERE), AND TOLUENE ESTIMATED BELOW DETECTION LIMIT AT SED-29 AND SED-30.

OF THE METALS, BERYLLIUM, LITHIUM, SILVER, TIN, AND ZINC WERE NOTABLY ELEVATED ABOVE BACKGROUND IN THE SEDIMENT OF THE SOUTH INTERCEPTOR DITCH AND WOMAN CREEK (TABLE A-15, APPENDIX A). CONCENTRATIONS OF SILVER (AS HIGH AS 49 MG/KG) ARE GREATER THAN FIVE TIMES THE UPPER LIMIT OF THE BACKGROUND RANGE AT STATIONS SED-25, SED-26, AND SED-30. BERYLLIUM WAS NOT DETECTED IN THE BACKGROUND SAMPLES (LESS THAN 1.1 MG/KG) BUT OCCURS AT CONCENTRATIONS RANGING FROM 3.8 TO 15.5 MG/KG IN ALL THE SEDIMENT SAMPLES COLLECTED FROM THE SOUTH INTERCEPTOR DITCH AND WOMAN CREEK. ALTHOUGH TIN WAS NOT ABOVE BACKGROUND (LESS THAN 22.8 MG/KG) AT SED-27, SED-28, AND SED-31, IT OCCURRED IN A RANGE FROM 364 TO 1080 MG/KG IN STATIONS SED-25, SED-26, SED-29, AND SED-30. CONCENTRATIONS OF ZINC (AS HIGH AS 735 MG/KG) ARE GREATER THAN THE UPPER LIMIT OF THE BACKGROUND RANGE AT STATIONS SED-11, SED-28, SED-29, AND SED-30.

PLUTONIUM WAS ABOVE BACKGROUND AT STATIONS SED-1, SED-2, SED-25, SED-26, SED-29, AND SED-30, RANGING IN CONCENTRATION FROM 0.06 TO 0.85 PCI/G

(TABLE A-16, APPENDIX A). CONTAMINATED SURFACE SOIL FROM THE 903 PAD AREA, TRANSPORTED PRIMARILY BY WIND, MAY BE THE SOURCE OF THIS PLUTONIUM.

2.3.4.2 SOUTH WALNUT CREEK DRAINAGE

THE SOUTH WALNUT CREEK SEDIMENT MONITORING STATIONS INCLUDE SED-11, SED-12 AND SED-13. ONLY ONE SAMPLE WAS OBTAINED FROM EACH OF SED-12 AND SED-13 (13 AUGUST 1986). DUE TO PRIORITIZATION OF SAMPLING ACTIVITIES, ADDITIONAL SAMPLES WERE NOT COLLECTED FROM THESE STATIONS. TABLE A-14, APPENDIX A SHOWS THAT ACETONE WAS REPORTED FOR ALL THREE STATIONS AND WAS ALSO ASSOCIATED WITH LABORATORY BLANKS. SED-11 WAS FOUND TO CONTAIN TCE AND 2-BUTANONE AT CONCENTRATIONS OF 39 MG/KG AND 12 G/KG, RESPECTIVELY. ALL OTHER VOCS WERE EITHER NOT DETECTED OR REPORTED BELOW DETECTION LIMITS FOR SED-11, SED-12 AND SED-13.

AS IN THE WOMAN CREEK DRAINAGE, BERYLLIUM, LITHIUM, SILVER, AND TIN ARE ELEVATED IN THE SEDIMENTS AT SED-11. THEY OCCURRED AT CONCENTRATIONS OF 2.5, 7.2, 15.0, AND 404 MG/KG, RESPECTIVELY. ZINC WAS ALSO NOTABLY ELEVATED, OCCURRING AT A CONCENTRATION OF 735 MG/KG (THE UPPER LIMIT OF THE BACKGROUND TOLERANCE INTERVAL IS 93 MG/KG). URANIUM 235 WAS REPORTED AT A CONCENTRATION OF 0.2 PCI/G FOR SED-11 AND AMERICIUM LEVELS

WERE REPORTED AT 0.19 PCI/G AND 0.03 PCI/G FOR SED-12 AND SED-13, RESPECTIVELY. PLUTONIUM WAS ALSO FOUND AT A CONCENTRATION OF 0.35 PCI/G AT SED-12. WIND-DISPERSED CONTAMINATED SOILS FROM THE 903 PAD AND LIP AREA MAY BE THE SOURCE OF THESE RADIONUCLIDES.

2.3.5 SURFACE WATER CONTAMINATION

TWENTY-SIX SURFACE WATER AND SURFACE SEEP STATIONS IN THE VICINITY OF THE 903 PAD, MOUND, AND EAST TRENCHES AREAS WERE SAMPLED DURING FIELD ACTIVITIES FROM 1986 THROUGH 1990 (SEE APPENDIX B). THE FOLLOWING DISCUSSION IS BASED ON ALL AVAILABLE DATA BECAUSE MANY SEEPS OR STREAM STATIONS WERE DRY DURING SOME SAMPLINGS. THESE DATA HAVE BEEN SUMMARIZED IN APPENDIX C AND COMPARED TO ARARS (SEE SECTION 3 FOR ARAR IDENTIFICATION). TOTAL RADIOCHEMICAL AND METALS DATA, ALTHOUGH PRESENTED IN THE APPENDIX, ARE NOT DISCUSSED BECAUSE AN ASSESSMENT METHODOLOGY THAT ACCOUNTS FOR VARYING CONCENTRATIONS OF SUSPENDED SOLIDS IS STILL BEING DEVELOPED. SURFACE WATER MONITORING LOCATIONS ARE SHOWN ON FIGURE 2-12. FLOWING SURFACE WATER IN DRAINAGES WAS SAMPLED AT STATIONS ON THE SOUTH INTERCEPTOR DITCH AND WOMAN CREEK JUST UPSTREAM OF POND C-2 AND AT STATIONS UPSTREAM OF THE B-SERIES PONDS ON SOUTH WALNUT CREEK. THE B-SERIES PONDS WERE NOT SAMPLED FOR THIS INVESTIGATION, AS THEY WILL BE SUBSEQUENTLY INVESTIGATED AS PART OF ANOTHER OPERABLE UNIT.

THE SURFACE WATER SEEPS ARE DOWNSLOPE AND SOUTHEAST OF THE 903 PAD AREA, AND DOWNSLOPE AND NORTH OF THE MOUND AREA AND EAST TRENCHES AREAS. BECAUSE SURFACE WATER AT SEEPS AND IN STREAMS REPRESENTS GROUNDWATER DISCHARGE (INTERMITTENT DISCHARGE WITH RESPECT TO STREAMS), THE SURFACE WATER COMPOSITIONS ARE SIMILAR TO THOSE OF LOCAL GROUND WATER. THE DATA

FOR BOTH MEDIA SHOW THAT PCE, TCE, CCL4, AND THEIR DEGRADATION PRODUCTS ARE THE PRINCIPAL VOCS, AND THEY SHOW VERY SIMILAR MAJOR ION CONTENTS AS WELL. HOWEVER, THERE IS ENOUGH VARIABILITY WITHIN STATIONS SO THAT IT IS NOT POSSIBLE TO DEMONSTRATE SURFACE/GROUNDWATER CONNECTIONS ON A WELL-BY-WELL, SEEP-BY-SEEP BASIS.

2.3.5.1 SURFACE WATER STATIONS SOUTHEAST OF 903 PAD AREA

THERE ARE SEVERAL SEEPS DOWNSLOPE TO THE SOUTHEAST OF THE 903 PAD. SURFACE WATER STATIONS ESTABLISHED AT THESE SEEPS IN THE 903 PAD LIP AREA ARE DESIGNATED SW-50, SW-51, SW-52, SW-55, SW-57, SW-58, AND SW-77. STATION SW-50 IS CLOSEST TO THE 903 PAD, AND SW-57 AND SW-52 ARE SOUTH OF SW-50. SW-51 AND SW-58 ARE LOCATED IN A DITCH ALONG THE ROAD EAST OF

SW-50; HOWEVER, OVERLAND FLOW OF SEEPAGE FROM SW-50, SW-52, AND SW-57 WILL ALSO ENTER THE DITCH. WATER IN THE DITCH PASSES UNDER THE ROAD SOUTH OF THESE LOCATIONS THROUGH A CULVERT. THE DISCHARGE OF THE CULVERT IS SAMPLED AT STATION SW-55. SW-77 IS ANOTHER SEEP LOCATED ON THE EAST SIDE OF THE ROAD, JUST NORTH OF SW-55. IT IS NOTED, THEREFORE, THAT SW-51, SW-58, AND SW-55 ARE PHYSICALLY CONNECTED AND LIKELY RECEIVE FLOW FROM SW-50, SW-52, AND SW-57. FARTHER DOWNGRADIENT STATIONS INCLUDE SEEPS AT SW-53, SW-62, SW-63, AND SW-64; SW-27, SW-30, SW-54, AND SW-70 ON THE SOUTH INTERCEPTOR DITCH; AND SW-26, SW-28, AND SW-29 ON WOMAN CREEK.

DATA FOR SEEPS IN THE VICINITY OF THE 903 PAD LIP SITE AND FARTHER DOWNGRADIENT AT SW-53, SW-63, AND SW-64 INDICATE ORGANIC CONTAMINATION. CONTAMINANTS IN SEEPS IN THE VICINITY OF THE 903 LIP SITE INCLUDE 1,1-DCE, 1,2-DCE, CCL4, TCE, AND PCE, WITH CONCENTRATIONS OF CCL4 AND

TCE EXCEEDING 1000 G/L. OCCASIONALLY 1,2-DCE AND TCE ARE PRESENT AT SW-53, LOW CONCENTRATIONS OF CCL4 AND TCE (LESS THAN 20 G/L) OCCUR AT SW-63, AND LOW CONCENTRATIONS OF TCE OCCUR AT SW-64. METHYLENE CHLORIDE ALSO OCCASIONALLY OCCURS IN THESE SEEPS, BUT AT CONCENTRATIONS NEAR THE DETECTION LIMIT, AND FREQUENTLY ALSO OCCURS IN THE LABORATORY BLANKS. LOW AND VERY INFREQUENT CONCENTRATIONS OF THESE AND OTHER VOCS OCCUR AT SEEP SW-62 AS WELL AS AT STATIONS ALONG THE SOUTH INTERCEPTOR DITCH. THE WATER-QUALITY DATA FOR STATIONS ALONG THE SOUTH INTERCEPTOR DITCH AND WOMAN CREEK DO NOT PROVIDE UNAMBIGUOUS EVIDENCE OF CONTAMINATION; HOWEVER, THE VOC CONCENTRATIONS IN THE UPGRADIENT SEEPS SUGGEST THAT A SOLVENT PLUME WITHIN ALLUVIAL GROUND WATER IS MIGRATING TO THE SOUTHEAST, WHICH IS CONSISTENT WITH THE ALLUVIAL GROUNDWATER FLOW DIRECTION. IT IS INFERRED THAT VOC CONTAMINATED ALLUVIAL GROUND WATER APPROACHES THE SOUTH INTERCEPTOR DITCH AND WOMAN CREEK.

WITH RESPECT TO INORGANIC AND DISSOLVED RADIONUCLIDE CONTAMINATION, THERE ARE SOMEWHAT ELEVATED CONCENTRATIONS OF TDS, MAJOR IONS, ALUMINUM, STRONTIUM, ZINC, AND URANIUM AT MOST OF THESE STATIONS. UNLIKE THE ABSENCE OF VOCS IN SURFACE WATER AT STATIONS ALONG THE SOUTH INTERCEPTOR DITCH (SW-70, SW-30, SW-54, AND SW-27), ALL HAVE SOMEWHAT ELEVATED URANIUM CONCENTRATIONS (GENERALLY LESS THAN 10 PCI/L OF TOTAL URANIUM).

THESE CONCENTRATIONS ARE USUALLY ABOVE ARAR (5 PCI/L). ALTHOUGH THE 903 PAD AREA CANNOT BE RULED OUT AS THE SOURCE OF THE URANIUM, THE OCCURRENCE OF ELEVATED URANIUM AS FAR UPGRADIENT AS SW-70 SUGGESTS THE 881 HILLSIDE AREA AS A POTENTIAL SOURCE. ALLUVIAL GROUND WATER AT THE 881 HILLSIDE CONTAINS LEVELS OF URANIUM ABOVE BACKGROUND.

SEEPS IN THE VICINITY OF THE 903 PAD LIP SITE (SW-50, SW-53, AND SW-54) HAD DETECTABLE PLUTONIUM AND/OR AMERICIUM DURING ONE SAMPLING EVENT IN 1989 (TWO EVENTS FOR SW-53). THE SAMPLES CONTAINED SUBSTANTIAL SUSPENDED SOLIDS AND WERE NOT FILTERED AT THE TIME OF COLLECTION, AND SURFACE SOILS IN THE VICINITY OF THE SEEPS ARE CONTAMINATED WITH RADIONUCLIDES. FURTHERMORE, TOTAL RADIOCHEMISTRY DATA DO INDICATE NOTABLY HIGHER PLUTONIUM AND AMERICIUM CONCENTRATIONS THAN IN FILTERED SAMPLES, DEMONSTRATING THAT MOST OF THE RADIONUCLIDES ARE IN A PARTICULATE FORM. THEREFORE, THE LOCAL SOILS REPRESENT THE MOST DIRECT POTENTIAL SOURCE FOR SEEP CONTAMINATION. HOWEVER, THERE WERE TRACES OF PLUTONIUM IN A FEW GROUNDWATER SAMPLES (HIGHEST CONCENTRATION AT WELL 15-87, 0.522 PLUS OR MINUS 0.117 PCI/L) SO GROUND WATER IS ALSO A POTENTIAL SOURCE OF RADIONUCLIDES IN SEEPS, ALBEIT A LESS SIGNIFICANT ONE.

IT IS NOTED THAT PLUTONIUM AND AMERICIUM ARE ESSENTIALLY INSOLUBLE IN NATURAL WATERS, BUT THEY CAN MIGRATE IN COLLOIDAL FORM, AND COLLOIDAL-SIZE PARTICLES CAN PASS THROUGH 0.45 M FILTERS SUCH AS THOSE USED IN THE PREVIOUS INVESTIGATION (PULS AND BARCELONA, 1989). THE DOE IS CURRENTLY CONDUCTING A STUDY TO ASSESS THE DISTRIBUTION OF PLUTONIUM AND AMERICIUM IN SURFACE WATER WITH RESPECT TO SUSPENDED SOLIDS PARTICLE SIZE. THE STUDY WILL INCLUDE FILTRATION OF SURFACE WATER THROUGH THREE PORE SIZES, AND LABORATORY ANALYSIS FOR PLUTONIUM AND AMERICIUM IN THE FILTERED AND UNFILTERED FRACTIONS (LESS THAN 0.10 M, 0.10 M TO LESS THAN 0.20 M, 0.20 M TO LESS THAN 0.45 M, AND GREATER THAN 0.45 M). ALTHOUGH THIS STUDY WAS NOT EXPLICITLY DESIGNED TO DIFFERENTIATE COLLOIDAL AND DISSOLVED RADIONUCLIDES, AND THEREFORE WILL BE UNABLE TO QUANTIFY COLLOIDAL MATERIAL UNDER 0.1 M, IT WILL DEMONSTRATE WHETHER A SIGNIFICANT PORTION OF THE RADIONUCLIDES ARE BETWEEN 0.1 AND 0.45 M AND THEREBY PROVIDE SOME INDICATION OF THE IMPORTANCE OF COLLOIDAL

TRANSPORT. ALSO, IF MOST OF THE PLUTONIUM IS PARTICULATE IN NATURE (GREATER THAN 0.1 M IN SIZE), IT IS LIKELY PLUTONIUM CAN BE REMOVED FROM SURFACE WATER BY UNIT PROCESSES EFFECTIVE AT REMOVAL OF SUSPENDED SOLIDS, E.G., SEDIMENTATION AND FILTRATION.

REGARDLESS OF THE TRANSPORT MODE, TOTAL PLUTONIUM CONCENTRATIONS OCCUR ABOVE BACKGROUND AT STATION SW-29 ON WOMAN CREEK (RANGE: LESS THAN MINIMUM DETECTABLE ACTIVITY (MDA) - .315 PLUS OR MINUS .115 PCI/L), AND DISSOLVED PLUTONIUM WAS DETECTABLE DURING ONE SAMPLING EVENT (.159 PLUS OR MINUS .142 PCI/L). DISSOLVED PLUTONIUM WAS ALSO DETECTABLE AT STATION SW-70 ON THE SOUTH INTERCEPTOR DITCH (.11 PLUS OR MINUS .09 PCI/L); HOWEVER, THE TOTAL PLUTONIUM CONCENTRATION WAS 0.011 PLUS OR MINUS .057 PCI/L DURING THIS SAMPLING EVENT, RENDERING THIS DATA QUESTIONABLE. THE ONE DATUM THAT EXISTS IN THE REMEDIAL INVESTIGATION

DATA BASE INDICATES TOTAL PLUTONIUM IS NOT ABOVE BACKGROUND IN POND C-2 (DISSOLVED RADIONUCLIDE DATA DO NOT EXIST).

2.3.5.2 UPPER SOUTH WALNUT CREEK

AT THE MOUND AREA, APPROXIMATELY 150 FEET DOWNGRADIENT OF THE PSZ FENCE, STATION SW-60 (SEE FIGURE 4-2) IS LOCATED AT THE OUTLET OF A CORRUGATED METAL CULVERT. THE CULVERT DISCHARGES PLANT RUNOFF THAT IS COLLECTED IN A DRAINAGE DITCH LOCATED OUTSIDE OF AND SOUTH OF THE PSZ. STATIONS SW-56 (NOT SAMPLED IN 1989) AND SW-101 ARE LOCATED ON A DITCH WITHIN THE PSZ THAT COLLECTS SEEPAGE ORIGINATING FROM THE HILLSIDE SOUTH OF BUILDING 991. WATER IN THE DITCH FLOWS BENEATH THE PSZ THROUGH A CONCRETE CULVERT AND DISCHARGES TO THE SOUTH WALNUT CREEK DRAINAGE JUST TO THE NORTH OF SW-60. THE DISCHARGE FROM THE CONCRETE CULVERT HAS RECENTLY BEEN ASSIGNED SURFACE WATER MONITORING STATION SW-133. STATION SW-59 IS LOCATED DOWNSTREAM OF SW-60 ON THE SOUTH BANK OF THE DRAINAGE AT WHAT APPEARS TO BE A SPRING OR DRAIN DISCHARGE. THE COMBINED FLOW OF SW-59, SW-60, AND SW-133 IS SAMPLED AT SW-61, WHICH IS LOCATED AT THE CONFLUENCE. (NOTE: PRIOR TO NOVEMBER 1987, SW-61 WAS LOCATED AT THE OUTLET OF THE CONCRETE CULVERT MENTIONED ABOVE. THE SAMPLE DATA FOR 7/22/87 AND 11/11/87 WERE OBTAINED FROM THE EFFLUENT OF THE CONCRETE CULVERT). FLOW FROM THE UPPER REACH OF SOUTH WALNUT CREEK IS DISCHARGED APPROXIMATELY 225 FEET DOWNSTREAM OF SW-61 FROM THE OUTLET OF A CORRUGATED METAL CULVERT. THIS DISCHARGE HAS NEVER BEEN ASSIGNED AS A SURFACE WATER MONITORING STATION AND HAS, THEREFORE, NEVER BEEN SAMPLED. IT HAS RECENTLY BEEN ASSIGNED STATION SW-132, HOWEVER. THE FLOW IN SOUTH WALNUT CREEK UPSTREAM OF POND B-4 IS PRIMARILY THE COMBINED FLOW FROM SW-132 AND THE DRAINAGE FLOW AT SW-61. STATION SW-23 IS LOCATED UPGRADIENT OF POND B-1. SW-22 IS LOCATED SOUTHEAST OF THE PRINCIPAL DRAINAGE AND WAS DRY DURING THE REPORTED SAMPLING EVENTS. IT IS NOTED THAT A SEWAGE TREATMENT PLANT IS LOCATED JUST DOWNGRADIENT OF SW-61 ON THE NORTH BANK OF THE DRAINAGE. THE EFFLUENT FROM THE PLANT IS PIPED DIRECTLY TO POND B-3.

SOUTH WALNUT CREEK BASIN SURFACE WATER, AS CHARACTERIZED BY DATA FOR STATIONS SW-56, SW-59, SW-60, SW-61, AND SW-101, CONTAIN CCL4, PCE, AND TCE IN CONCENTRATIONS IN EXCESS OF 200 G/L, WITH LESSER AND INFREQUENT CONCENTRATIONS OF 1,1-DCE, 1,1-DCA, 1,2-DCE, VINYL CHLORIDE (ALL ARE POSSIBLE DEGRADATION PRODUCTS OF TCE AND PCE), ACETONE, BROMO-DICHLOROMETHANE, AND METHYLENE CHLORIDE. THE LATTER COMPOUNDS MAY BE CONTAMINANTS, BUT THE DATA DO NOT ALLOW THIS CONCLUSION TO BE DRAWN WITH CERTAINTY. THESE STATIONS ALSO FREQUENTLY HAVE SURFACE WATER CONCENTRATIONS ABOVE ARARS FOR TDS AND URANIUM. THE TDS AND URANIUM

CONCENTRATIONS ARE TYPICAL OF THE ALLUVIAL GROUND WATER IN THE VICINITY OF THE 903 PAD AND MOUND AREAS. CCL4, PCE, TCE, AND ELEVATED ZINC ARE ALSO PRESENT IN THE ALLUVIAL GROUND WATER AT THE MOUND AREA.

THE ONLY DATUM AVAILABLE FOR STATION SW-23 (AUGUST 1986 SAMPLING) SHOWS AN ABSENCE OF VOCS. ALTHOUGH THERE ARE NO AUGUST 1986 DATA FOR THE UPSTREAM STATIONS, THE DATA SUGGEST THE ORGANICS HAVE VOLATILIZED OVER

THIS REACH.

2.3.5.3 SEEPS AT THE EAST TRENCHES AREAS

OF THE TWO SEEPS AT THE EAST TRENCHES AREAS (SW-65 AND SW-103), SW-65 HAS NO APPARENT ORGANIC CONTAMINATION, AND SW-103 HAS THE CONSTANT PRESENCE OF CCL4 AT CONCENTRATIONS LESS THAN 10 G/L. DISSOLVED URANIUM WAS ALSO ABOVE ARAR AT SW-65. LIKE THE 903 PAD AND MOUND AREAS, THE CHEMISTRY OF THESE SEEPS IS SIMILAR TO THE LOCALIZED GROUND WATER.

2.3.6 AIR CONTAMINATION

THE 903 PAD AREA IS RECOGNIZED AS THE PRINCIPAL SOURCE OF AIRBORNE PLUTONIUM CONTAMINATION AT THE RFP. AN EXTENSIVE AIR MONITORING NETWORK KNOWN AS THE RADIOACTIVE AMBIENT AIR MONITORING PROGRAM (RAAMP) IS MAINTAINED AT THE PLANT IN ORDER TO MONITOR PARTICULATE EMISSIONS FROM THE 903 PAD AREA AND OTHER PLANT FACILITIES. HISTORICALLY, THE PARTICULATE SAMPLERS LOCATED IMMEDIATELY EAST, SOUTHEAST, AND NORTHEAST OF THE 903 PAD, MOUND, AND EAST TRENCHES AREAS HAVE SHOWN THE HIGHEST PLUTONIUM CONCENTRATIONS. THIS FINDING IS CORROBORATED BY THE RESULTS OF SOIL SURVEYS WHICH INDICATE ELEVATED PLUTONIUM CONCENTRATIONS TO THE EAST, PARTICULARLY SOUTHEAST OF THE AREA. HOWEVER, RAAMP HAS FOUND AMBIENT AIR SAMPLES FOR PLUTONIUM TO BE WELL WITHIN THE DOE GUIDELINES OF 20.0 X (10-6) PCI/L ESTABLISHED FOR THE PROTECTION OF HUMAN HEALTH (ROCKWELL INTERNATIONAL, 1987B).

2.3.7 SUMMARY OF CONTAMINATION

THE PHASE I RI INVESTIGATIONS OF ENVIRONMENTAL MEDIA LEAD TO THE GENERAL CONCLUSIONS THAT VOLATILE ORGANIC AND RADIONUCLIDE CONTAMINATION EXISTS IN SOILS, SURFACE WATER AND GROUND WATER AROUND SEVERAL OU 2 IHSSS, AND THAT THE DISTRIBUTION AND MAGNITUDE OF THE CONTAMINATION CAN BE BETTER DELINEATED VIA SAMPLING AND ANALYSIS PLANNED FOR THE PHASE II INVESTIGATION.

TCE, PCE AND CCL4 ARE THE PRINCIPAL ORGANIC CONTAMINANTS IN SURFACE AND GROUND WATERS, WITH LESSER AMOUNTS OF THEIR DEGRADATION PRODUCTS AND OTHER COMPOUNDS AT NUMEROUS SAMPLING SITES THROUGHOUT OU 2. PLUTONIUM AND AMERICIUM IN SURFACE WATER SAMPLES ARE OTHER APPARENT INDICATORS OF RFP-DERIVED CONTAMINATION.

SEVERAL METALS AND OTHER INORGANIC CONSTITUENTS (INCLUDING URANIUM) ARE ALSO ABOVE BACKGROUND IN THE ENVIRONMENTAL MEDIA, BUT THE DATA DO NOT PERMIT UNAMBIGUOUS CONCLUSIONS WITH REGARD TO CONTAMINATION. THE UNCERTAINTY RESULTS IN PART FROM THE ABSENCE OF CLEAR CONCENTRATION GRADIENTS AND FROM THE LIMITED KNOWLEDGE OF THE INORGANIC COMPOSITION OF WASTE SOURCES IN OU 2. NATURAL PROCESSES (E.G., EVAPORATIVE CONCENTRATION) MAY GOVERN THE SOURCE AND DISTRIBUTION OF SUCH INORGANIC CONSTITUENTS. THIS WILL BE FURTHER INVESTIGATED IN THE CONTEXT OF LONG-TERM REMEDIATION AT OU 2.

2.4 ANALYTICAL DATA

ORGANIC, INORGANIC AND RADIONUCLIDE CONTAMINANTS EXIST IN OU 2 SURFACE WATER. VOLUME II (APPENDIX B) PRESENTS A COMPILATION OF VOLATILE ORGANIC, INORGANIC AND RADIOCHEMISTRY DATA FOR ALL SURFACE WATER STATIONS AT OU 2 THAT ARE AVAILABLE AT THIS TIME. ONLY A SMALL FRACTION OF THE DATA HAVE BEEN VALIDATED; THEY ARE IDENTIFIED IN THE APPENDICES BY A QUALIFIER ADJACENT TO EACH DATUM. THE QUALIFIERS "V" (VALID), "A" (ACCEPTABLE WITH QUALIFICATIONS), AND "R" (REJECTED) ARE ASSIGNED IN ACCORDANCE WITH THE ER PROGRAM QUALITY ASSURANCE/QUALITY CONTROL (QA/QC) PLAN (ROCKWELL INTERNATIONAL, 1989B). REJECTED DATA EITHER DID NOT CONFORM TO THE QA/QC PROCEDURES, OR INSUFFICIENT DOCUMENTATION EXITS TO DEMONSTRATE CONFORMANCE WITH THESE PROCEDURES. THESE DATA, AT BEST, CAN ONLY BE CONSIDERED QUALITATIVE MEASURES OF THE ANALYTE CONCENTRATIONS. THE SCHEDULE FOR THE IM/IRA DOES NOT PERMIT WAITING FOR ALL DATA TO BE VALIDATED. HOWEVER, THE VALIDATED DATA AND THEIR SIMILARITY TO UNVALIDATED DATA ARE CONSIDERED SUFFICIENT TO JUSTIFY AND TO DEFINE THE GENERAL CONFIGURATION OF THE IM/IRA.

2.5 SITE CONDITIONS THAT JUSTIFY AN IM/IRA

AS DISCUSSED IN SECTION 1, THERE IS NO IMMEDIATE THREAT TO THE PUBLIC HEALTH AND ENVIRONMENT POSED BY SURFACE WATER CONTAMINATION IN SOUTH WALNUT CREEK BASIN. THE AFFECTED SURFACE WATER IS CONTAINED WITHIN THE PLANT BOUNDARY BY EXISTING DETENTION PONDS, AND IS TREATED AND MONITORED PRIOR TO DISCHARGE. THERE IS, HOWEVER, POTENTIAL FOR AN IMMINENT THREAT TO DEVELOP AND IMPLEMENTATION OF THIS IM/IRA WILL REDUCE THE LIKELIHOOD THAT SUCH A THREAT WILL RESULT BY ENHANCING DOE'S EFFORTS TO MANAGE CONTAMINATED SURFACE WATER. ALTHOUGH DOWNSTREAM SAFEGUARDS ARE PROVIDED BY THE B-PONDS, THIS IM/IRA SHOULD REDUCE THE POTENTIAL FOR OFF-SITE MIGRATION AND UNCONTROLLED RELEASES OF CONTAMINATED SURFACE WATER BY REDUCING CONTAMINATED SURFACE WATER LOADING TO THE PONDS. IN ADDITION, BY COLLECTING CONTAMINATED SURFACE WATER THROUGH DIVERSIONS AT THE SOURCES, THIS IM/IRA WILL MITIGATE DOWNSTREAM MIGRATION OF CONTAMINANTS AND COULD REDUCE THE SIZE AND COST OF FUTURE RFP REMEDIAL ACTIONS. SUCH AN ACTION IS CONSISTENT WITH THE GOALS FOR A FINAL REMEDY AT THE SITE.

THIS IM/IRA FOCUSES ONLY ON CONTROLLING THE MIGRATION OF HAZARDOUS SUBSTANCES IN SOUTH WALNUT CREEK BASIN SURFACE WATER AND DOES NOT ADDRESS SOIL OR GROUNDWATER CONTAMINATION. AN OU 2 PHASE II RI PLAN HAS BEEN PREPARED TO FURTHER CHARACTERIZE THE EXTENT OF CONTAMINATION IN PREPARATION FOR FURTHER REMEDIAL ACTIONS AT OU 2.

3.1 SCOPE OF INTERIM MEASURES/INTERIM REMEDIAL ACTION

THE OVERALL OBJECTIVE OF THE SOUTH WALNUT CREEK BASIN IM/IRA AT OU 2 IS THE MITIGATION OF DOWNGRADIENT CONTAMINANT MIGRATION WITHIN SURFACE WATER BY MEANS OF THE COLLECTION AND TREATMENT OF CONTAMINATED SURFACE WATER TO ACHIEVE, TO THE EXTENT PRACTICABLE, ARARS (SEE SECTION 3.3).

ARARS ARE USED IN DEFINING THE REMEDIATION GOALS FOR THE INTERIM ACTION. BASED ON THE MEETINGS BETWEEN DOE, CDH, AND EPA DURING FEBRUARY AND MARCH 1990, AND COMMENTS RECEIVED DURING THE PUBLIC COMMENT PERIOD, DOE

IS PROPOSING THIS IM/IRA PLAN WHICH SPECIFIES POINT SOURCE LOCATIONS FOR THE COLLECTION OF CONTAMINATED SURFACE WATER, AND PROVIDES FOR THE COLLECTION AND TREATMENT OF FLOWS EXCLUSIVE OF THOSE RESULTING FROM HIGH PRECIPITATION EVENTS.

3.2 INTERIM REMEDIAL ACTION SCHEDULE

REVISIONS TO THIS PLAN BASED ON PUBLIC COMMENT, PREPARATION OF A RESPONSIVENESS SUMMARY PURSUANT TO THE PUBLIC MEETING, TREATABILITY STUDIES, AND DESIGN AND IMPLEMENTATION OF THIS IM/IRA WILL OCCUR THROUGH SPRING 1991. MILESTONE DATES FOR SPECIFIC ACTIVITIES ARE PRESENTED IN TABLE D-1, APPENDIX D. TABLE D-1 SHOWS THE MILESTONE SCHEDULE AS PROPOSED IN THE DRAFT FFACO/IAG (DOE, 1990A).

3.3 COMPLIANCE WITH APPLICABLE OR RELEVANT AND APPROPRIATE REQUIREMENTS (ARARS) AND PROTECTION OF HUMAN HEALTH AND THE ENVIRONMENT

THE NCP (FR VOL 55, NO. 46, 8848; 40 CFR 300.430 (E)) REQUIRES THAT, IN DEVELOPMENT OF ALTERNATIVES FOR FINAL REMEDIATION, THE FOLLOWING BE CONSIDERED:

1. ARARS;

2. FOR SYSTEMIC CONTAMINANTS, CONCENTRATION LEVELS THAT WILL NOT CAUSE ADVERSE EFFECTS TO THE HUMAN POPULATION AND SENSITIVE SUBGROUPS OVER A LIFETIME OF EXPOSURE;

3. FOR CARCINOGENS, CONCENTRATION LEVELS THAT REPRESENT AN EXCESS LIFETIME INDIVIDUAL CANCER RISK LESS THAN (10-4) CONSIDERING MULTIPLE CONTAMINANTS AND MULTIPLE PATHWAYS OF EXPOSURE;

4. FACTORS RELATED TO DETECTION LIMITS;

5. FOR CURRENT OR POTENTIAL SOURCES OF DRINKING WATER, ATTAINMENT OF MAXIMUM CONTAMINANT LEVEL GOALS (MCLGS) OR MAXIMUM CONTAMINANT LEVELS (MCLS), IF MCLGS ARE ZERO; AND,

6. ATTAINMENT OF CLEAN WATER ACT (CWA) WATER QUALITY CRITERIA WHERE RELEVANT AND APPROPRIATE.

THE IAG, IN PARAGRAPH 150, STATES "INTERIM REMEDIAL ACTIONS/INTERIM MEASURES SHALL, TO THE GREATEST EXTENT PRACTICABLE, ATTAIN ARARS." ALSO FOR INTERIM ACTIONS, THE NCP (40 CFR 300.430(F)) SPECIFICALLY NOTES THAT AN ARAR CAN BE WAIVED IF THE ACTION IS TO BECOME PART OF THE FINAL REMEDY THAT WILL ATTAIN ARARS. THE RESULTS OF THE TREATABILITY STUDIES IDENTIFIED IN SECTION 6.4 WILL ALLOW EVALUATION OF THE EXTENT TO WHICH THE IM/IRA WILL ATTAIN ARARS, I.E., IT MAY NOT BE PRACTICABLE TO ATTAIN

ALL ARARS FOR THIS INTERIM ACTION AND ARAR WAIVERS OR ALTERNATE CONCENTRATION LIMITS MAY BE REQUESTED AFTER THE STUDY IS COMPLETED.

THIS SECTION IDENTIFIES AND ANALYZES ARARS RELEVANT TO THE SOUTH WALNUT CREEK BASIN IM/IRA AND DISCUSSES HOW THE ACTION WILL BE PROTECTIVE OF HUMAN HEALTH AND THE ENVIRONMENT. THIS REMEDIAL ACTION IS CONSIDERED AN ON-SITE IM/IRA TO BE ADMINISTERED UNDER CERCLA; THEREFORE, ONLY SUBSTANTIVE AND NOT ADMINISTRATIVE REQUIREMENTS OF REGULATIONS (SUCH AS RCRA) APPLY. PERMITS, FOR EXAMPLE, ARE NOT REQUIRED (PER PARAGRAPH 121 OF THE IAG).

"APPLICABLE REQUIREMENTS," AS DEFINED IN 40 CFR 300.5, MEANS "THOSE CLEANUP STANDARDS, STANDARDS OF CONTROL, AND OTHER SUBSTANTIVE REQUIREMENTS, CRITERIA, OR LIMITATIONS PROMULGATED UNDER FEDERAL ENVIRONMENTAL OR STATE ENVIRONMENTAL OR FACILITY SITING LAWS THAT SPECIFICALLY ADDRESS A HAZARDOUS SUBSTANCE, POLLUTANT, CONTAMINANT, REMEDIAL ACTION, LOCATION, OR OTHER CIRCUMSTANCE FOUND AT A CERCLA SITE. ONLY THOSE STATE STANDARDS THAT ARE IDENTIFIED BY A STATE IN A TIMELY MANNER AND THAT ARE MORE STRINGENT THAN FEDERAL REQUIREMENTS MAY BE APPLICABLE". "RELEVANT AND APPROPRIATE REQUIREMENTS," ALSO DEFINED IN 40 CFR 300.5, MEANS "THOSE CLEANUP STANDARDS, STANDARDS OF CONTROL, AND OTHER SUBSTANTIVE REQUIREMENTS, CRITERIA, OR LIMITATIONS PROMULGATED UNDER FEDERAL ENVIRONMENTAL OR STATE ENVIRONMENTAL OR FACILITY SITING LAWS, THAT, WHILE NOT "APPLICABLE" TO A HAZARDOUS SUBSTANCE, POLLUTANT, CONTAMINANT, REMEDIAL ACTION, LOCATION, OR OTHER CIRCUMSTANCE AT A CERCLA SITE, ADDRESS PROBLEMS OR SITUATIONS SUFFICIENTLY SIMILAR TO THOSE ENCOUNTERED AT THE CERCLA SITE THAT THEIR USE IS WELL SUITED TO THE PARTICULAR SITE. ONLY THOSE STATE STANDARDS THAT ARE IDENTIFIED IN A TIMELY MANNER AND ARE MORE STRINGENT THAN FEDERAL REQUIREMENTS MAY BE RELEVANT AND APPROPRIATE." IN ADDITION TO APPLICABLE OR RELEVANT AND APPROPRIATE REQUIREMENTS, ADVISORIES, CRITERIA, OR GUIDANCE MAY BE IDENTIFIED TO BE CONSIDERED (TBC) FOR A PARTICULAR RELEASE. AS DEFINED IN 40 CFR 300.400(G)(3), THE "TO BE CONSIDERED" (TBC) CATEGORY CONSISTS OF ADVISORIES, CRITERIA, OR GUIDANCE DEVELOPED BY EPA, OTHER FEDERAL AGENCIES, OR STATES THAT MAY BE USEFUL IN DEVELOPING REMEDIES. USE OF "TBCS" IS DISCRETIONARY RATHER THAN MANDATORY AS IS THE CASE WITH APPLICABLE OR RELEVANT AND APPROPRIATE REQUIREMENTS.

IN GENERAL, THERE ARE THREE CATEGORIES OF ARARS. THESE CATEGORIES ARE:

* AMBIENT OR CHEMICAL-SPECIFIC REQUIREMENTS
* LOCATION-SPECIFIC REQUIREMENTS
* PERFORMANCE, DESIGN, OR OTHER ACTION-SPECIFIC REQUIREMENTS

EACH CATEGORY IS DISCUSSED IN MORE DETAIL BELOW.

3.3.1 AMBIENT OR CHEMICAL-SPECIFIC REQUIREMENTS

AMBIENT OR CHEMICAL-SPECIFIC REQUIREMENTS SET HEALTH- OR RISK-BASED CONCENTRATION LIMITS IN VARIOUS ENVIRONMENTAL MEDIA FOR SPECIFIC

HAZARDOUS SUBSTANCES OR POLLUTANTS. THESE REQUIREMENTS SET PROTECTIVE CLEAN-UP LEVELS FOR THE CHEMICALS OF CONCERN IN THE DESIGNATED MEDIA, OR INDICATE A SAFE LEVEL OF AIR EMISSION OR WASTEWATER DISCHARGE. THE CHEMICAL-SPECIFIC ARARS IDENTIFIED HEREIN ARE USED IN DEFINING THE REMEDIATION GOALS FOR CLEAN UP OF CONTAMINATED SURFACE WATER AND DISCHARGE OF TREATED WATER.

ARARS ARE DERIVED PRIMARILY FROM FEDERAL AND STATE HEALTH AND ENVIRONMENTAL STATUTES AND REGULATIONS. THE FOLLOWING MAY BE CONSIDERED WHEN ESTABLISHING CLEAN-UP STANDARDS, BUT ARE NOT CONSIDERED ARARS: HEALTH EFFECTS ASSESSMENTS, HEALTH ADVISORIES, CHEMICAL ADVISORIES, AND GUIDANCE DOCUMENT CRITERIA. THESE AND ANY PROPOSED STANDARDS ARE CLASSIFIED AS ITEMS TO BE CONSIDERED, OR TBCS. WHERE BACKGROUND CONCENTRATIONS FOR CONSTITUENTS ARE ABOVE THE ARAR FOR THAT CONSTITUENT, A WAIVER FROM THE ARAR MAY BE APPROPRIATE. A SUMMARY OF ARARS FOR THE CONTAMINANTS FOUND IN SOUTH WALNUT CREEK BASIN SURFACE WATER AT OU 2 ARE PRESENTED IN APPENDIX E, TABLES E-1.1 THROUGH E-1.4. TABLES E-1.1,

E-1.2, E-1.3, AND E-1.4 PRESENT ARARS FOR VOLATILE ORGANICS, METALS, CONVENTIONAL POLLUTANTS, AND RADIONUCLIDES, RESPECTIVELY AND WILL BE APPLIED TO OPERATIONS INVOLVING WATER TREATMENT EFFLUENT.

AS DISCUSSED IN 55 FR8741, WHEN MORE THAN ONE ARAR HAS BEEN IDENTIFIED FOR A CONTAMINANT, THE MOST STRINGENT STANDARD HAS BEEN IDENTIFIED AS THE ARAR WHICH THE IM/IRA WILL ATTAIN TO THE GREATEST EXTENT PRACTICABLE. WHERE NO ARAR STANDARD EXISTS, A TBC STANDARD HAS BEEN IDENTIFIED WHICH THE IM/IRA WILL TREAT AS A GOAL TO ACHIEVE. AN ARAR ANALYSIS FOR VOLATILE ORGANICS, METALS, CONVENTIONAL POLLUTANTS, AND RADIONUCLIDES, RESPECTIVELY, IS PRESENTED IN TABLES E-2.1, E-2.2, E-2.3, AND E-2.4. THE SCREENING PROCESS INCLUDES CONSIDERATION OF BOTH GROUNDWATER AND SURFACE WATER STANDARDS BECAUSE OF THE PROBABLE INTERACTION OF ALLUVIAL GROUND WATER AND SURFACE WATER IN THE DRAINAGES OF THE RFP. OF THE ELEMENTS/COMPOUNDS DETECTED IN SOUTH WALNUT CREEK BASIN SURFACE WATER AT OU 2, THERE ARE NO ARARS FOR CALCIUM, MAGNESIUM, POTASSIUM, SODIUM, BICARBONATE, AND STRONTIUM. HOWEVER, THE TDS ARAR ESTABLISHES THE ACCEPTABLE AGGREGATE CONCENTRATION FOR THE ABOVE MAJOR IONS (EXCLUDING STRONTIUM). ALTHOUGH NO ARAR OR TBC EXISTS FOR STRONTIUM, AN OBJECTIVE OF THIS IM/IRA WILL BE TO REDUCE STRONTIUM TO BACKGROUND LEVELS.

3.3.1.1 SAFE DRINKING WATER ACT MAXIMUM CONTAMINANT LEVELS (MCLS) AND MCL GOALS

BECAUSE SOUTH WALNUT CREEK BASIN SURFACE WATER AT OU 2 IS A SOURCE OF DRINKING WATER, MCLS ARE RELEVANT AND APPROPRIATE FOR ALL PHASES OF THE IM/IRA. MCLS ARE DERIVED FROM THE SAFE DRINKING WATER ACT (SDWA) (PL 93-523). THEY REPRESENT THE MAXIMUM PERMISSIBLE LEVEL OF A CONTAMINANT IN WATER WHICH IS DELIVERED TO THE FREE-FLOWING OUTLET OF THE ULTIMATE USER OF A PUBLIC WATER SYSTEM (40 CFR 141.2(C)). PER THE NEW NCP, MCLGS HAVE ALSO BEEN CONSIDERED IN DEVELOPING CLEAN-UP STANDARDS.

3.3.1.2 AMBIENT WATER QUALITY CRITERIA

THE AMBIENT WATER QUALITY CRITERIA (AWQC) ARE NON-ENFORCEABLE GUIDANCE DEVELOPED UNDER THE CWA. GUIDANCE IS SET FOR SURFACE WATERS FOR THE PROTECTION OF AQUATIC LIFE AND FOR THE PROTECTION OF HUMAN HEALTH, BASED ON CONSUMPTION OF BOTH DRINKING WATER AND AQUATIC ORGANISMS FROM THAT WATER. THE PROPOSED IM/IRA INVOLVES TREATMENT AND DISCHARGE TO SURFACE WATER THAT HAS A USE-PROTECTED DESIGNATION, AQUATIC LIFE CLASS II WARM WATER CLASSIFICATION. ALTHOUGH NOT ARAR, PER THE NEW NCP, THE AWQC ARE CONSIDERED AS RELEVANT AND APPROPRIATE PRELIMINARY REMEDIATION GOALS. FINAL REMEDIATION GOALS WILL BE SET ACCORDING TO ARARS AND FOR TOTAL RISK DUE TO CARCINOGENS THAT REPRESENT AN EXCESS UPPERBOUND LIFETIME CANCER RISK TO AN INDIVIDUAL TO BETWEEN (10-4) TO (10-6) LIFETIME EXCESS CANCER RISK WHEN THE FINAL REMEDY IS SELECTED FOR ALL OF OU 2.

3.3.1.3 COLORADO SURFACE AND GROUNDWATER QUALITY STANDARDS

THE COLORADO WATER QUALITY CONTROL COMMISSION (WQCC) HAS PROPOSED GROUNDWATER QUALITY STANDARDS FOR MANY COMPOUNDS FOR PROTECTION OF BOTH HUMAN HEALTH AND AGRICULTURAL USES. THESE PROPOSED STANDARDS ARE CONSIDERED TBC SINCE THEY ARE NOT ENFORCEABLE STANDARDS UNTIL RFP'S GROUND WATER IS CLASSIFIED BY THE WQCC. WHERE STANDARDS EXIST FOR BOTH HUMAN HEALTH AND AGRICULTURAL USES, THE MORE STRINGENT STANDARD IS SELECTED AS TBC.

PERMANENT SURFACE WATER QUALITY STANDARDS HAVE BEEN ADOPTED BY WQCC FOR WALNUT CREEK. THESE INCLUDE STANDARDS FOR MANY ORGANIC, INORGANIC AND RADIONUCLIDE PARAMETERS. THESE STANDARDS WENT INTO EFFECT MARCH 30, 1990, AND ARE CONSIDERED APPLICABLE TO THIS INTERIM REMEDIAL ACTION.

FOR BOTH GROUND WATER AND SURFACE WATER STANDARDS, SOME OF THE STANDARDS ARE LOWER THAN THE CURRENT STANDARD DETECTION LIMITS FOR THE CONSTITUENTS. WHEN THIS OCCURS, THE WQCC PRACTICAL QUANTITATION LIMIT (PQL) WILL BE CONSIDERED AS THE ARAR.

3.3.1.4 RCRA GROUNDWATER PROTECTION STANDARDS

OWNERS OR OPERATORS OF FACILITIES THAT TREAT, STORE, OR DISPOSE OF HAZARDOUS WASTE MUST ENSURE THAT HAZARDOUS CONSTITUENTS LISTED IN 6 CCR (COLORADO CODE OF REGULATIONS) 1007-3 AND 40 CFR 261, APPENDIX VIII, ENTERING THE GROUND WATER FROM A REGULATED UNIT DO NOT EXCEED CONCENTRATION LIMITS UNDER 6 CCR 1007-3 AND 40 CFR 264.94. THE CONCENTRATION LIMITS INCLUDE STANDARDS FOR 14 COMPOUNDS, WITH BACKGROUND (1) OR ALTERNATE CONCENTRATION LIMITS (ACLS), USED AS THE STANDARD FOR THE OTHER RCRA APPENDIX VIII CONSTITUENTS. THESE CONCENTRATION LIMITS APPLY TO RCRA-REGULATED UNITS SUBJECT TO PERMITTING (LANDFILLS, SURFACE IMPOUNDMENTS, WASTE PILES, AND LAND TREATMENT UNITS) THAT RECEIVED RCRA HAZARDOUS WASTE AFTER JULY 26, 1982. ALTHOUGH THIS AREA DOES NOT CONTAIN RCRA-REGULATED HAZARDOUS WASTE MANAGEMENT UNITS, IT DOES CONTAIN IHSSS. AS A RESULT, THESE RCRA (SUBPART F) REGULATIONS ARE CONSIDERED

RELEVANT AND APPROPRIATE FOR GROUND WATER REMEDIATION. THESE REQUIREMENTS ARE NOT APPLICABLE OR RELEVANT AND APPROPRIATE WITH RESPECT TO THE PROPOSED INTERIM REMEDIAL ACTION IN THAT THEY DO NOT SPECIFICALLY ADDRESS THE COLLECTION, TREATMENT, AND DISCHARGE OF SURFACE WATERS NOR ARE THESE ACTIVITIES SUFFICIENTLY SIMILAR TO THE CIRCUMSTANCES REGULATED BY THE RCRA SUBPART F REQUIREMENTS TO BE RELEVANT AND APPROPRIATE. RCRA GROUNDWATER PROTECTION REQUIREMENTS RELATE SPECIFICALLY TO PROTECTION AGAINST DEGRADATION OF THE UPPERMOST AQUIFER BY A REGULATED UNIT, OR A SOLID WASTE MANAGEMENT UNIT (SWMU) IN THE CASE OF CORRECTIVE ACTION ACTIVITIES, WHICH CLEARLY DO NOT RELATE TO THE COLLECTION, TREATMENT, AND DISCHARGE OF SURFACE WATERS, WHETHER OR NOT SUCH WATERS HAVE BEEN AFFECTED BY THE INTRODUCTION OF GROUND WATER THROUGH SEEPS. THE RCRA GROUNDWATER REQUIREMENTS DO PROVIDE AN EFFECTIVE MECHANISM FOR THE PROTECTION OF THE UPPERMOST AQUIFER AND, CONSEQUENTLY, POTENTIAL DRINKING WATER SOURCES. ACCORDINGLY, SINCE EFFLUENT DISCHARGES COULD POTENTIALLY AFFECT DOWNSTREAM DRINKING WATER SOURCES, THE SUBPART F REQUIREMENTS HAVE BEEN INCLUDED AS TBC FOR SURFACE WATER. BACKGROUND CONCENTRATIONS FOR 40 CFR 264, APPENDIX IX CONSTITUENTS NOT LISTED IN APPENDIX VIII ARE ALSO TBC FOR SURFACE WATER.

(1) TBC BACKGROUND SURFACE WATER VALUES FOR RCRA SUBPART F ARE APPLIED USING MAXIMUM CONCENTRATIONS FROM BACKGROUND SURFACE WATER AT RFP.

3.3.1.5 PROTECTION OF HUMAN HEALTH AND THE ENVIRONMENT

AS ILLUSTRATED BY THE HAZARD QUOTIENTS AND CARCINOGENIC RISKS LISTED IN TABLES E-1.1 THROUGH E-1.4, ACHIEVING THE ARARS SHOULD RESULT IN A CLEAN-UP ACTION THAT IS PROTECTIVE OF HUMAN HEALTH AND THE ENVIRONMENT. FOR NON-CARCINOGENS, THE PROTECTIVENESS GOAL IS A HAZARD INDEX OF 1. THE HAZARD INDEX IS THE SUM OF THE HAZARD QUOTIENTS (I.E., THE ESTIMATED DAILY INTAKE (DOSE) TO REFERENCE DOSE RATIOS) FOR ALL OF THE

CONTAMINANTS COMBINED, WHICH HAVE BEEN COMPUTED AND ARE PRESENTED IN TABLE E-1. IN ASSESSING NON-CARCINOGENIC RISK, A HAZARD INDEX OF ONE OR LESS IS CONSIDERED TO BE ACCEPTABLE. IF THE HAZARD INDEX EXCEEDS ONE, IT INDICATES THAT THERE MIGHT BE THE POTENTIAL FOR ADVERSE NON-CARCINOGENIC HEALTH EFFECTS OCCURRING. UNLIKE THE METHOD USED TO EVALUATE THE POTENTIAL FOR CARCINOGENIC TOXICITY, THE HAZARD INDEX DOES NOT INDICATE THE PROBABILITY OF ADVERSE HEALTH EFFECTS OCCURRING, BUT IT IS USED AS A BENCHMARK FOR DETERMINING WHERE THERE IS A POTENTIAL CONCERN. WITH RESPECT TO CARCINOGENS, CUMULATIVE CANCER RISK SHOULD BE LESS THAN (10-4) (INDIVIDUAL CANCER RISKS SHOWN IN TABLE E-1 ARE CONSIDERED ADDITIVE). AS NOTED IN TABLE E-1, THE CALCULATED INCREMENTAL CANCER RISKS EXCEED (10-4) FOR SOME OF THE ORGANIC CARCINOGENS AS WELL AS FOR ARSENIC AND BERYLLIUM. HOWEVER, THE CANCER RISKS ARE COMPUTED ON THE BASIS OF THE DETECTION LIMIT AND THEREFORE CAN ONLY BE CONSIDERED A POSSIBLE MAXIMUM CARCINOGENIC RISK; THE ACTUAL RISK IS UNKNOWN BUT LIKELY TO BE CONSIDERABLY LOWER. REMOVING THESE CONTAMINANTS TO NON-DETECTABLE LEVELS AND ATTAINING, TO THE EXTENT PRACTICABLE, THE OTHER ARARS, THE IM/IRA IS CONSIDERED PROTECTIVE OF HUMAN HEALTH AND THE ENVIRONMENT.

3.3.2 LOCATION-SPECIFIC REQUIREMENTS

LOCATION-SPECIFIC ARARS ARE LIMITS PLACED ON THE CONCENTRATION OF HAZARDOUS SUBSTANCES OR THE CONDUCT OF ACTIVITIES SOLELY BECAUSE THEY OCCUR IN CERTAIN LOCATIONS. THESE MAY RESTRICT OR PRECLUDE CERTAIN REMEDIAL ACTIONS OR MAY APPLY ONLY TO CERTAIN PORTIONS OF A SITE. EXAMPLES OF LOCATION-SPECIFIC ARARS WHICH PERTAIN TO THE IM/IRA ARE FEDERAL AND STATE SITING LAWS FOR HAZARDOUS WASTE FACILITIES (40 CFR 264.18, FAULT ZONE AND FLOODPLAIN RESTRICTIONS), AND FEDERAL REGULATIONS REQUIRING THAT ACTIONS MINIMIZE OR AVOID ADVERSE EFFECTS TO WETLANDS (40 CFR PART 6 APPENDIX A AND 40 CFR PARTS 230-231).

MORE SPECIFICALLY, IN ADDITION TO THE REQUIREMENTS DESCRIBED ABOVE, PERTINENT LOCATION-SPECIFIC ARARS INCLUDE: COLORADO REQUIREMENTS FOR SITING OF HAZARDOUS WASTE FACILITIES AND WASTEWATER TREATMENT FACILITIES (COLORADO REVISED STATUTE 25-15-101, 203, 208, 302 AND 25-8-292, 702, RESPECTIVELY), NATIONAL HISTORIC PRESERVATION ACT REQUIREMENTS FOR PRESERVATION OF SIGNIFICANT ARTICLES AND HISTORIC PROPERTIES (36 CFR PARTS 65 AND 800, RESPECTIVELY), FEDERAL CRITICAL HABITAT PROTECTION REQUIREMENTS (50 CFR PARTS 200, 402 AND 33 CFR PARTS 320-330), AND FEDERAL REQUIREMENTS FOR THE PROTECTION OF FISH AND WILDLIFE RESOURCES (40 CFR 6.302).

A SUMMARY OF LOCATION-SPECIFIC ARARS WHICH THE IM/IRA WILL ATTAIN TO THE GREATEST EXTENT PRACTICABLE IS PRESENTED IN TABLE E-4.

3.3.3 PERFORMANCE, DESIGN, OR OTHER ACTION-SPECIFIC REQUIREMENTS

PERFORMANCE, DESIGN, OR OTHER ACTION-SPECIFIC REQUIREMENTS SET CONTROLS OR RESTRICTIONS ON PARTICULAR KINDS OF ACTIVITIES RELATED TO MANAGEMENT OF HAZARDOUS SUBSTANCES OR POLLUTANTS. THESE REQUIREMENTS ARE NOT TRIGGERED BY THE SPECIFIC CHEMICALS PRESENT AT A SITE, BUT RATHER BY THE PARTICULAR IM/IRA ALTERNATIVES THAT ARE EVALUATED AS PART OF THIS PLAN.

ACTION-SPECIFIC ARARS ARE TECHNOLOGY-BASED PERFORMANCE STANDARDS, SUCH AS THE BEST AVAILABLE TECHNOLOGY (BAT) STANDARD OF THE FEDERAL WATER

POLLUTION CONTROL ACT. OTHER EXAMPLES INCLUDE RCRA TREATMENT, STORAGE, AND DISPOSAL STANDARDS, AND CLEAN WATER ACT PRETREATMENT STANDARDS FOR DISCHARGES TO PUBLICLY-OWNED TREATMENT WORKS (POTWS). RCRA LDRS FOR CERTAIN CONTAMINANTS (40 CFR PART 268.40) ARE ALSO ACTION-SPECIFIC ARARS FOR THE DISPOSAL OF SECONDARY WASTES GENERATED DURING WATER TREATMENT. ACTION-SPECIFIC ARARS, WHICH THE IM/IRA WILL ATTAIN TO THE GREATEST EXTENT PRACTICABLE, ARE INCLUDED IN TABLE E-3.1. TABLE E-3.2 PRESENTS RCRA LAND DISPOSAL RESTRICTIONS (LDR) WHICH ARE ARAR AND APPLICABLE TO NON-EFFLUENT WASTES (E.G., TREATMENT SLUDGES, EXCAVATED SOILS, USED TREATMENT MATERIALS) IF THEY MAY BE DETERMINED TO CONTAIN HAZARDOUS WASTES. LDR REQUIREMENTS ARE RELEVANT AND APPROPRIATE FOR WASTES WHICH ARE NOT HAZARDOUS WASTES, AS DEFINED IN 40 CFR, PART 261, BUT DO CONTAIN

HAZARDOUS SUBSTANCES.

AS EXPLAINED IN THE NATIONAL CONTINGENCY PLAN (SEE 55 FR 8666) OSHA REQUIREMENTS FOR WORKER PROTECTION IN HAZARDOUS WASTE OPERATIONS AND EMERGENCY RESPONSE (29 CFR 1910.120) ARE APPLICABLE TO WORKERS INVOLVED IN HAZARDOUS SUBSTANCE-RELATED ACTIVITIES, AS WELL AS OTHER OSHA REQUIREMENTS RELATED TO SPECIFIC CIRCUMSTANCES OR ACTIVITIES. THESE REQUIREMENTS ARE NOT ENVIRONMENTAL IN NATURE, HOWEVER, AND ARE NOT TO BE INCLUDED AS ARARS. THOSE REQUIREMENTS WHICH ARE APPLICABLE ARE JUST THAT, APPLICABLE, WHILE NON-APPLICABLE REQUIREMENTS COULD, AT MOST, BE RELEVANT AND COULD BE INCLUDED AS GUIDANCE TO BE CONSIDERED (TBC).

IDENTIFICATION AND ANALYSIS OF IM/IRA ALTERNATIVES

4.1 SURFACE WATER COLLECTION AND TREATMENT ALTERNATIVES

THIS SECTION PRESENTS THE TECHNIQUE FOR COLLECTION OF CONTAMINATED SURFACE WATER AND A DETAILED EVALUATION OF ALTERNATIVE TREATMENT TECHNOLOGIES. TREATMENT TECHNOLOGIES CORRESPONDING TO THE FOLLOWING CATEGORIES ARE EVALUATED IN THIS SECTION:

* TREATMENT FOR SUSPENDED SOLIDS REMOVAL;
* TREATMENT FOR RADIONUCLIDE REMOVAL; AND
* TREATMENT FOR VOLATILE ORGANIC CONSTITUENT REMOVAL.

THE TREATMENT TECHNOLOGIES SELECTED FOR CONSIDERATION ARE BASED ON THEIR PROBABILITY OF ATTAINING THE EFFLUENT REQUIREMENTS (ARARS PRESENTED IN SECTION 4.1.2). THE PROCESS FOR CRITICAL EVALUATION OF THE TREATMENT TECHNOLOGIES IS PRESENTED IN SECTION 4.2. THE EVALUATION CRITERIA INCLUDE EFFECTIVENESS, IMPLEMENTABILITY AND COST OF THE TECHNOLOGY. SECTION 4.3 EXAMINES IN DETAIL THE TECHNIQUE OF SURFACE WATER COLLECTION BY DIVERSION AT THE SOURCES. THE TREATMENT TECHNOLOGIES ARE PRESENTED AND EVALUATED IN SECTION 4.4. THE TREATMENT SYSTEM DESIGNS PRESENTED IN SECTION 4.4 ARE CONCEPTUAL, WITH ONLY ENOUGH DETAIL TO DETERMINE RELATIVE COSTS. DETAILED DESIGN AND COSTING FOR THE IM/IRA WILL BE CONDUCTED AFTER THE RESULTS OF THE BENCH AND FIELD-SCALE TREATABILITY STUDIES ARE OBTAINED. THE COMPARATIVE COST EVALUATIONS EMPLOY A STANDARD 30-YEAR BASIS FOR PRESENT WORTH ANALYSIS. HOWEVER, THE ACTUAL SERVICE LIFE OF THE SOUTH WALNUT CREEK BASIN SURFACE WATER IM/IRA IS NOT KNOWN AT THIS TIME. THE IM/IRA COULD, FOR EXAMPLE, BECOME A PART OF THE LONG-TERM OU 2 REMEDIAL ACTION. LASTLY, ALL SOLID WASTE GENERATED DURING THE IM/IRA, WITH THE EXCEPTION OF ACTIVATED CARBON (E.G., FILTER CAKE, EXCAVATED SOILS FROM INSTALLATION OF THE SURFACE WATER DIVERSION AND COLLECTION STRUCTURES, AND SEDIMENTS ACCUMULATING IN THE COLLECTION SYSTEM DURING OPERATION) WILL BE CHARACTERIZED AND HANDLED ACCORDING TO

THE RFP WASTE MANAGEMENT OPERATING PROCEDURES. FOR COSTING PURPOSES, HOWEVER, IT IS ASSUMED THAT THESE WASTES WILL BE HANDLED AND DISPOSED AS LOW-LEVEL MIXED WASTE.

4.1.1 SURFACE WATER COLLECTION TECHNOLOGIES

FIGURE 4-1 ILLUSTRATES THE LOCATIONS OF THE SOUTH WALNUT CREEK BASIN SURFACE WATER SEEPS AND IN-STREAM MONITORING STATIONS. AS MENTIONED IN SECTION 1.0, GENERAL AGREEMENT BETWEEN EPA, CDH AND DOE WAS REACHED ON THE SPECIFIC LOCATIONS FOR COLLECTION OF CONTAMINATED SURFACE WATER. THESE LOCATIONS ARE DESIGNATED IN FIGURE 4-1 AS THE "IM/IRA SURFACE WATER MONITORING STATIONS" AND INCLUDE SW-56, SW-59, SW-60, SW-61, SW-101, AND SW-132. IT WAS AGREED THAT FLOWS AT THESE STATIONS WOULD BE COLLECTED EITHER AT THE STATIONS OR IMMEDIATELY DOWNSTREAM AT A POINT OF CONFLUENCE. FIGURE 4-2 OFFERS A DETAILED PLAN VIEW OF THE LOCATIONS OF SW-59, SW-60, SW-61, SW-132, AND SW-133 IN THE SOUTH WALNUT CREEK DRAINAGE. CONTAMINATED WATER IN THE DRAINAGE ULTIMATELY ENTERS POND B-5 VIA POND B-4.

AT THE MEETINGS IN FEBRUARY AND MARCH 1990 BETWEEN DOE AND THE REGULATORY AGENCIES, SEEP SW-103 WAS ALSO TARGETED FOR COLLECTION. IT IS LOCATED WITHIN THE SOUTH WALNUT CREEK DRAINAGE UPSTREAM OF POND B-5 (FIGURE 4-1). THE SEEP CONTAINS TRACE CONCENTRATIONS OF CCL4 (LESS THAN 10 UG/L) AND CONCENTRATIONS OF TOTAL PLUTONIUM, AMERICIUM, URANIUM, AND SEVERAL METALS ABOVE ARARS. HOWEVER, AT THE TIME, THE PHYSIOGRAPHIC FEATURES OF THE SEEP WERE NOT DISCUSSED. OF PARTICULAR NOTE IS THE LARGE AREA OF SEEPAGE (APPROXIMATELY 30,000 SQ. FT.) AND THE LOCATION OF THE SEEP ON A STEEP HILLSIDE. THESE FEATURES NECESSITATE AN ELABORATE DRAINAGE SYSTEM FOR SEEPAGE COLLECTION THAT WOULD REQUIRE DISTURBANCE OF LARGE AREAS OF POTENTIALLY CONTAMINATED SATURATED SOILS WHICH WOULD LIKELY RESULT IN RELEASE OF SIGNIFICANT QUANTITIES OF CONTAMINANTS DOWNSTREAM. CONSTRUCTION AT SW-103 WOULD ALSO HAVE A NEGATIVE IMPACT ON THE LARGE AREA OF WETLAND PRESENT AT THIS SEEP. FOR THESE REASONS, AND BECAUSE THE CCL4 AND DISSOLVED INORGANIC CONSTITUENT CONCENTRATIONS IN THE SEEPAGE ARE LOW, AND THE CONTRIBUTION OF RADIONUCLIDE AND METALS CONTAMINATION FROM SW-103 TO THE SOUTH WALNUT CREEK DRAINAGE ABOVE THE DETENTION PONDS IS LIKELY TO BE INSIGNIFICANT RELATIVE TO THAT RESULTING FROM CONTAMINATED SURFACE WATER RUNOFF, COLLECTION OF WATER AT THIS SEEP IS NO LONGER RECOMMENDED FOR THIS IM/IRA. SINCE THE ENVIRONMENTAL IMPACTS OF CONSTRUCTION OF A SURFACE WATER COLLECTION SYSTEM AT SW-103 APPEARS TO OUTWEIGH THE BENEFITS OF COLLECTING AND TREATING THIS SEEPAGE, CONSIDERATION OF COLLECTION AT SW-103 IS DEFERRED UNTIL ADDITIONAL HYDROGEOLOGICAL AND CONTAMINANT CHARACTERIZATION INFORMATION IS GATHERED AND ASSESSED DURING CONDUCT OF THE PHASE II RFI/RIFS ALLUVIAL WORK PLAN FOR OU 2.

SEVERAL ALTERNATIVES EXIST FOR COLLECTING THE CONTAMINATED SOUTH WALNUT CREEK BASIN SURFACE WATERS MENTIONED ABOVE. FIRST AND FOREMOST IS COLLECTION OF SURFACE WATER BY DIVERSION AT THE SOURCE. THIS TECHNIQUE EMPLOYS EXISTING OR NEWLY CONSTRUCTED DIVERSION STRUCTURES AT THE SEEP OR IN-STREAM STATIONS TO DIVERT THE SURFACE WATER INTO COLLECTION SUMPS. THIS METHOD OF SURFACE WATER COLLECTION WAS AGREED TO BY EPA, CDH, AND DOE IN THE FEBRUARY AND MARCH 1990 MEETINGS. THIS TECHNIQUE WILL BE FURTHER DISCUSSED AND EVALUATED IN SECTION 4.3. FOR COMPARATIVE PURPOSES, TWO OTHER SURFACE WATER COLLECTION METHODS ARE DISCUSSED

BELOW.

A SECOND METHOD OF SURFACE WATER COLLECTION IS BY GROUNDWATER WITHDRAWAL USING AN UPGRADIENT WELL ARRAY OR FRENCH DRAIN. THIS TECHNIQUE LOWERS THE GROUNDWATER TABLE AND ELIMINATES SEEPAGE, ALLOWING SEPARATION OF CONTAMINATED GROUND WATER (SEEPAGE) FROM SURFACE WATER RUNOFF, E.G., AT SW-59. HOWEVER, THE HYDROGEOLOGY AT OU 2 IS NOT ADEQUATELY UNDERSTOOD TO DESIGN AN EFFECTIVE GROUNDWATER WITHDRAWAL SYSTEM. FOR EXAMPLE, IT IS NOT KNOWN WHETHER THE SEEPAGE IS DUE TO WATER ORIGINATING IN THE ROCKY FLATS ALLUVIUM AND BEING RELEASED TO THE SURFACE THROUGH COLLUVIUM BECAUSE OF SLOPE CHANGES AND/OR BEDROCK HIGHS, OR WHETHER THE SOURCE OF THE WATER IS BEDROCK SANDSTONE SUBCROPPING IN THIS VICINITY. THIS INFORMATION IS CRITICAL TO THE DESIGN OF AN EFFECTIVE GROUND WATER WITHDRAWAL SYSTEM. EPA ALLUDED TO THE ISSUE IN THEIR TRANSMITTAL LETTER (JANUARY 9, 1990) WHICH ACCOMPANIED THEIR COMMENTS ON THE DRAFT OU 2 GROUNDWATER IM/IRA PLAN, WHEREIN THEY STATED "...THIS OU IS DIFFICULT TO ADDRESS ON AN INTERIM BASIS DUE TO THE LACK OF COMPREHENSIVE QUALITY DATA CHARACTERIZING THE NATURE AND EXTENT OF CONTAMINATION. IT IS UNCERTAIN WHETHER THE MOST PROBABLE IMMINENT THREAT, THE ALLUVIAL GROUNDWATER SYSTEM, CAN BE EFFECTIVELY ADDRESSED AT THIS TIME." FOR THIS REASON, COLLECTION OF SURFACE WATER BY GROUNDWATER WITHDRAWAL IS ELIMINATED AS A REASONABLE ALTERNATIVE FOR THIS IM/IRA AND WILL NOT BE CONSIDERED FOR FURTHER DETAILED EVALUATION.

A THIRD COLLECTION ALTERNATIVE IS TO ALLOW THE CONTAMINATED SURFACE WATER TO CONTINUE TO FLOW THROUGH THE SOUTH WALNUT CREEK DRAINAGE INTO DETENTION POND B-5. THE CONTAMINATED SOUTH WALNUT CREEK BASIN SURFACE WATER, ALONG WITH ALL OTHER WATERS COLLECTED AND DETAINED IN POND B-5 WOULD BE TRANSFERRED FROM THE POND FOR TREATMENT. THIS METHOD HAS THREE PRIMARY DRAWBACKS. FIRST, THERE IS A POTENTIAL THREAT OF TRANSFERRING THE SURFACE WATER CONTAMINANTS TO GROUND WATERS WITHIN THE SOUTH WALNUT CREEK DRAINAGE BASIN VIA INFILTRATION. SECONDLY, RELEASE OF VOCS TO THE ATMOSPHERE WILL OCCUR WHILE THE SURFACE WATER IS IN TRANSIT TO DETENTION POND B-5. FINALLY, ALLOWING THE SOUTH WALNUT CREEK BASIN SURFACE WATERS TO MIX WITH OTHER WATERS RETAINED IN POND B-5 GENERALLY INCREASES THE VOLUME OF DILUTE CONTAMINATED WATER AT THE RFP FACILITY THAT MAY REQUIRE TREATMENT. FOR THESE REASONS, COLLECTION OF SOUTH WALNUT CREEK BASIN SURFACE WATERS AT DETENTION POND B-5 IS ELIMINATED AS A REASONABLE ALTERNATIVE FOR THE IM/IRA AND WILL NOT BE CONSIDERED FOR FURTHER DETAILED EVALUATION.

4.1.2 SURFACE WATER TREATMENT TECHNOLOGIES

BASED ON THE OBJECTIVES OF THE SURFACE WATER IM/IRA DISCUSSED IN SECTION 3.1, TABLE 4-1 HAS BEEN PREPARED TO ESTABLISH THE BASIS FOR CONCEPTUAL DESIGN FOR SURFACE WATER TREATMENT. THE INFLUENT CONSTITUENT CONCENTRATIONS LISTED IN TABLE 4-1 ARE ESTIMATED FROM A FLOW-WEIGHTED MAXIMUM CONCENTRATION MODEL BASED ON THE MAXIMUM CONSTITUENT CONCENTRATIONS OBSERVED AT THE SW-59 AND SW-61 COLLECTION POINTS. THE FLOW VALUES USED TO WEIGHT THE MAXIMUM CONCENTRATIONS USED IN THE MODEL

ARE THE CORRESPONDING COLLECTION SYSTEM DESIGN FLOWS (ESTABLISHED IN SECTION 4.3 AND LISTED IN TABLE 4-5). A SPREADSHEET ILLUSTRATING COMPUTATION OF THE FLOW-WEIGHTED MAXIMUM CONCENTRATION COMPUTATION IS SHOWN IN TABLE F-1, APPENDIX F. TO BE CONSERVATIVE, THE MAXIMUM CONSTITUENT CONCENTRATIONS USED IN THE MODEL FOR SW-61 ALSO INCLUDES

MAXIMUM OBSERVED CONCENTRATIONS FOR THE GROUP OF STATIONS UPGRADIENT OF SW-61 (I.E., SW-56, SW-60, AND SW-101). UNFORTUNATELY, STATION SW-132 WAS ONLY RECENTLY ASSIGNED TO THE OU 2 SURFACE WATER SAMPLING PROGRAM AND CONCENTRATION DATA FOR THIS DISCHARGE ARE NOT AVAILABLE FOR USE IN THE TREATMENT SYSTEM DESIGN MODEL. AS DISCUSSED IN SECTION 1, HOWEVER, THE WATER QUALITY CHARACTERISTICS OF THIS STREAM ARE EXPECTED TO BE SIMILAR TO THAT AT SW-61. THIS ASSUMPTION HAS BEEN USED TO PROVIDE A REASONABLE CONCEPTUAL TREATMENT SYSTEM DESIGN BASIS IN THE ABSENCE OF SW-132 DATA. THE DESIGN BASIS WILL BE UPDATED AS SW-132 CONCENTRATION AND FLOW DATA BECOME AVAILABLE TO VERIFY THE INFLUENT CONCENTRATIONS COMPUTED HEREIN.

TABLE F-1 SHOWS THAT STRICT APPLICATION OF THE FLOW WEIGHTED CONCENTRATION MODEL PREDICTS VINYL CHLORIDE, METHYLENE CHLORIDE AND ACETONE INFLUENT CONCENTRATIONS ABOVE THEIR RESPECTIVE ARAR VALUES. HOWEVER, EXAMINATION OF THE SURFACE WATER DATA PRESENTED IN APPENDIX B REVEALS THAT THESE CONSTITUENTS ARE NOT LIKELY TO BE PRESENT IN THE INFLUENT AT LEVELS ABOVE ARAR. VINYL CHLORIDE, METHYLENE CHLORIDE AND ACETONE WERE DETECTED AT LEVELS ABOVE ARAR ONLY AT STATIONS SW-56, SW-60 AND SW-101. HOWEVER, AS PROPOSED IN SECTION 4-3, CONTAMINATED SURFACE WATER FROM THESE STATIONS WILL BE COLLECTED AT THE DOWNSTREAM STATION SW-61 WHERE VINYL CHLORIDE, METHYLENE CHLORIDE AND ACETONE HAVE ALWAYS BEEN ESTIMATED BELOW DETECTION LIMITS AND/OR WERE ALSO PRESENT IN THE ASSOCIATED LABORATORY BLANKS. THESE COMPOUNDS ARE, THEREFORE, NOT INCLUDED IN THE BASIS FOR DESIGN OF THE SURFACE WATER TREATMENT PLANT. THE EFFLUENT CONCENTRATIONS LISTED IN TABLE 4-1 CORRESPOND TO THE ARAR FOR EACH CONSTITUENT.

TREATMENT TECHNOLOGIES FOR RADIONUCLIDES AND METALS REMOVAL THAT ARE CONSIDERED IN THIS IM/IRA PLAN INCLUDE CHEMICAL PRECIPITATION, CROSS-FLOW MEMBRANE FILTRATION, AND ION EXCHANGE. LIQUID-PHASE GRANULAR ACTIVATED CARBON (GAC) ADSORPTION, AIR STRIPPING WITH LIQUID AND VAPOR PHASE GAC ADSORPTION, AND ULTRAVIOLET (UV)/PEROXIDE OXIDATION ARE CONSIDERED FOR VOC REMOVAL. MANY TREATMENT UNITS SUITABLE FOR REMOVAL OF VOCS AND RADIONUCLIDES FROM WATER REQUIRE THAT SUSPENDED SOLIDS BE REMOVED FROM THE INFLUENT TO PREVENT PERFORMANCE DEGRADATION AND/OR FOULING. REMOVAL OF SUSPENDED SOLIDS DOWN TO THE 1 M PARTICLE SIZE RANGE ENSURES OPTIMUM TREATMENT SYSTEM PERFORMANCE. THE TWO CANDIDATE INFLUENT PRETREATMENT ALTERNATIVES FOR REMOVAL OF SUSPENDED SOLIDS CONSIDERED FOR THIS IM/IRA ARE CROSS-FLOW MEMBRANE FILTRATION AND POLYMER ADDITION WITH GRANULAR MEDIA FILTRATION IN A CONTINUOUS BACKWASH FILTER. PRETREATMENT IS ALSO A VEHICLE FOR REMOVAL OF PARTICULATE RADIONUCLIDES AND METALS AND, WITH CHEMICAL ADDITION, SHOULD FACILITATE PRECIPITATION AND ADSORPTION OF SOLUBLE RADIONUCLIDES AND METALS.

4.2 IM/IRA ALTERNATIVE EVALUATION PROCESS

THE FOLLOWING DISCUSSION OF THE IM/IRA ALTERNATIVE EVALUATION PROCESS IS BASED ON EPA GUIDANCE SET FORTH IN THE MARCH 1990 NCP.

4.2.1 EFFECTIVENESS

THE CRITERIA FOR EFFECTIVENESS EVALUATION OF REMEDIAL ALTERNATIVES INCLUDES PROTECTION AND THE USE OF ALTERNATIVES TO LAND DISPOSAL. PROTECTION INCLUDES PROTECTION OF THE COMMUNITY AND WORKERS DURING THE REMEDIAL ACTION; THREAT REDUCTION; LENGTH OF TIME UNTIL PROTECTION IS ACHIEVED; COMPLIANCE WITH CRITERIA, ADVISORIES AND GUIDANCE; RISK OF

POTENTIAL EXPOSURE TO RESIDUALS REMAINING ON SITE; AND CONTINUED RELIABILITY OVER THE LIFE OF THE IM/IRA. THE EFFECTIVENESS CRITERIA ALSO INCLUDES USE OF ALTERNATIVES TO LAND DISPOSAL, THUS PROMOTING TREATMENT OR RECYCLING. IN ADDITION, THE ALTERNATIVES WILL BE EVALUATED WITH RESPECT TO REDUCTION OF TOXICITY, MOBILITY, AND VOLUME OF WASTES PER THE MARCH 1990 NCP.

4.2.2 IMPLEMENTABILITY

THE CRITERIA FOR IMPLEMENTABILITY EVALUATION OF REMEDIAL ALTERNATIVES INCLUDES TECHNICAL FEASIBILITY, AVAILABILITY, AND ADMINISTRATIVE FEASIBILITY. TECHNICAL FEASIBILITY INCLUDES THE ABILITY TO: CONSTRUCT THE TECHNOLOGY; MAINTAIN ITS OPERATION; MEET PROCESS EFFICIENCIES OR PERFORMANCE GOALS; DEMONSTRATED PERFORMANCE; EVALUATE IMPACT OF ENVIRONMENTAL CONDITIONS; AND COMPLY WITH THE SARA REQUIREMENT THAT REMOVAL ACTIONS SHOULD CONTRIBUTE TO THE EFFICIENT PERFORMANCE OF LONG-TERM REMEDIAL ACTION TO THE EXTENT PRACTICABLE. AVAILABILITY INCLUDES THE AVAILABILITY OF NECESSARY EQUIPMENT, MATERIALS AND PERSONNEL; AVAILABILITY OF ADEQUATE OFF-SITE TREATMENT, STORAGE, AND DISPOSAL CAPACITY, IF APPROPRIATE; AND DESCRIPTION OF POST-REMEDIAL SITE CONTROLS WHICH WILL BE REQUIRED AT THE COMPLETION OF THE ACTION. ADMINISTRATIVE FEASIBILITY INCLUDES THE LIKELIHOOD OF PUBLIC ACCEPTANCE OF THE ALTERNATIVE, INCLUDING SITE AND LOCAL CONCERN; COORDINATION OF ACTIVITIES WITH OTHER AGENCIES; AND ABILITY TO OBTAIN ANY NECESSARY APPROVALS OR PERMITS.

4.2.3 COSTS

THE CRITERIA FOR EVALUATION OF REMEDIAL ALTERNATIVE COST INCLUDES TOTAL COST AND STATUTORY LIMITS. TOTAL COST INCLUDES DIRECT CAPITAL COSTS, INDIRECT CAPITAL COSTS, AND OPERATING AND MAINTENANCE COSTS. SINCE THE SURFACE WATER IM/IRA AT OU 2 IS NOT AN EPA-FINANCED REMEDIAL ACTION, THE $2 MILLION STATUTORY COST LIMIT DOES NOT APPLY.

4.3 EVALUATION OF THE IM/IRA SURFACE WATER COLLECTION SYSTEM

AS DISCUSSED EARLIER, SOUTH WALNUT CREEK BASIN CONTAMINATED SURFACE WATERS WILL BE COLLECTED BY DIVERSION AT THE SOURCES. THIS SECTION

FURTHER DESCRIBES THIS TECHNIQUE AS IT APPLIES TO THE SURFACE WATER SEEP AND IN-STREAM MONITORING STATIONS CONSIDERED IN THIS IM/IRA. THIS PRESENTATION INCLUDES A DISCUSSION OF THE ANTICIPATED SEEP AND IN-STREAM MONITORING STATION FLOWS, AND AN EVALUATION OF THE COLLECTION TECHNIQUE PER THE EVALUATION PROCESS OUTLINED IN SECTION 4.2.

4.3.1 SURFACE WATER COLLECTION BY DIVERSION AT THE SOURCES

4.3.1.1 DESCRIPTION

FIGURE 4-3 SHOWS THE LOCATIONS OF THE SURFACE WATER DIVERSION AND COLLECTION SYSTEMS PROPOSED FOR THE IM/IRA. THE COLLECTION SYSTEMS (CSS) ARE DENOTED CS-59, CS-61, AND CS-132. THE PROPOSED LOCATION OF THE SURFACE WATER TREATMENT PLANT IS ALSO INDICATED ON FIGURE 4-3. THE CSS PROVIDE FOR AUTOMATIC PIPELINE TRANSFER OF THE COLLECTED SURFACE WATER TO THE TREATMENT SYSTEM.

DESIGN FLOW RATES FOR SURFACE WATER COLLECTION SYSTEMS CS-59, CS-61, AND CS-132 ARE BASED ON FLOWS FROM STATIONS SW-59, SW-61, AND SW-132,

RESPECTIVELY. THE DESIGN FLOW RATES ARE MAXIMUM FLOWS OBSERVED IN THE 1988, 1989, AND 1990 FIELD INVESTIGATIONS, EXCLUDING FLOWS RELATED TO HIGH PRECIPITATION EVENTS. ONLY DESIGN FLOWS WILL BE COLLECTED FROM THE SOUTH WALNUT CREEK BASIN SURFACE WATER MONITORING STATIONS. HISTORICAL FLOW DATA FOR SW-59 ARE LISTED IN TABLE 4-2. TABLE 4-2 LISTS ONLY TWO FLOW RATES OF SUFFICIENT QUANTITY TO BE MEASURABLE FOR SW-59 (EACH 4.5 GALLONS PER MINUTE (GPM)). ROCKY FLATS PERSONNEL HAVE OBSERVED FLOWS AT SW-59 MONTHLY SINCE SPRING 1990. THEY REPORT THAT A FLOW OF APPROXIMATELY 0.5 GPM WAS OCCURRING AT EACH OBSERVATION. IT IS EXPECTED THAT ALL FLOWS AT SW-59 WILL BE DIVERTED FOR TREATMENT.

HISTORICAL FLOW DATA FOR SW-61 ARE LISTED IN TABLE 4-3. TABLE 4-3 INDICATES TWO HIGH FLOW EVENTS FOR SW-61 OF 166 GPM. ALL OTHER HISTORICAL FLOW DATA FOR SW-61 ARE BELOW 36 GPM. TO COMPLEMENT THE HISTORICAL DATA HISTORICAL FLOW DATA ARE NOT AVAILABLE AT SW-132 AS THIS IS A NEWLY DESIGNATED MONITORING STATION. HOWEVER, IT WAS OBSERVED DURING OCTOBER 1990 AND DECEMBER 1990 FIELD SURVEYS THAT THE FLOW AT SW-132 WAS APPROXIMATELY EQUAL TO THE FLOW AT SW-60. THE DESIGN FLOW RATE FOR CS-132 WILL THUS BE BASED ON HISTORICAL FLOW DATA FOR SW-60. TABLE 4-4 INDICATES A MAXIMUM OBSERVED FLOW OF 18 GPM FOR SW-60.

BASED ON THE HISTORICAL DATA AVAILABLE AND THE APRIL 1990 FIELD MEASUREMENT, DESIGN FLOW RATES AND AVERAGE ANNUAL WITHDRAWAL RATES FOR EACH OF THE COLLECTION SYSTEMS WERE ESTABLISHED. THE DESIGN AND WITHDRAWAL FLOW RATES ARE PRESENTED IN TABLE 4-5. A DESIGN FLOW OF 37.5 GPM IS ASSIGNED TO SW-61. THIS FLOW REPRESENTS AN ABOVE-AVERAGE PRECIPITATION WET SEASON FLOW NOT CORRESPONDING TO A MAJOR STORM EVENT. THE HISTORICAL MAXIMUM FLOW FOR SW-59, 4.5 GPM, IS USED AS THE DESIGN BASIS FOR THE COLLECTION SYSTEM AT THIS SEEP. A DESIGN FLOW OF 18 GPM IS ASSIGNED TO CS-132 BASED ON THE HISTORICAL MAXIMUM FLOW OBSERVED AT SW-60. AVERAGE ANNUAL WITHDRAWAL RATES SHOWN IN TABLE 4-5 ARE ESTIMATED

AS FOLLOWS: FOR SW-61, THE HISTORICAL FLOW DATA SPANNING THE 12-MONTH PERIOD OF MARCH 1989 TO MARCH 1990 (SEE TABLE 4-3) IS AVERAGED. IN THE AVERAGING PROCESS 37.5 GPM, THE DESIGN WITHDRAWAL RATE AT SW-61, IS SUBSTITUTED FOR 166 GPM FOR THE 3/20/89 AND 3/12/90 RECORDED MEASUREMENTS. THIS CALCULATION GIVES AN ANNUAL AVERAGE WITHDRAWAL RATE OF APPROXIMATELY 14 GPM. AVERAGING THE HISTORICAL FLOW DATA FOR SW-59 (SEE TABLE 4-2), THE ANNUAL AVERAGE WITHDRAWAL RATE AT SW-59 IS FOUND TO BE APPROXIMATELY 1 GPM. AS WITH THE DESIGN FLOW RATE FOR SW-132, THE ANNUAL AVERAGE WITHDRAWAL RATE FOR SW-132 WILL BE ESTIMATED FROM HISTORICAL FLOW DATA AT SW-60. AVERAGING THE HISTORICAL FLOW DATA AT SW-60 GIVES AN ESTIMATE OF THE ANNUAL AVERAGE WITHDRAWAL RATE OF 5 GPM AT SW-132.

THE FLOWS FROM SW-60 AND SW-133 WILL BE COLLECTED AT THE DOWNSTREAM STATION SW-61 BY A NEW SURFACE WATER DIVERSION WEIR AND PUMP STATION. A SCHEMATIC OF AN EXAMPLE SURFACE WATER DIVERSION AND COLLECTION SYSTEM IS ILLUSTRATED IN FIGURE 4-4. THE WEIR AT SW-61 WILL SERVE TO DIVERT UP TO 37.5 GPM FROM THE DRAINAGE. CONTAMINATED SURFACE WATER WILL FLOW FROM UPSTREAM OF THE WEIR TO A MANHOLE AND SUMP. FOR COST ESTIMATING PURPOSES, IT WILL BE ASSUMED THAT A 1,000-GALLON CAPACITY, PRECAST CONCRETE SUMP WILL BE USED AT CS-61. SUBMERSIBLE PUMPS INSTALLED IN THE SUMP ALONG WITH A LEVEL CONTROL SYSTEM WILL AUTOMATICALLY TRANSFER COLLECTED WATER TO THE TREATMENT FACILITY. THE PUMPING CAPACITY WILL BE DESIGNED TO ACCOMMODATE THE 37.5 GPM DESIGN FLOW. IF THE INFLOW INTO THE PUMP STATION MANHOLE EXCEEDS THE PUMPING RATE, HOWEVER, THE EXCESS FLOW WILL RETURN THROUGH OVERFLOW PIPING TO THE DRAINAGE IMMEDIATELY

DOWNSTREAM OF THE CS-61 WEIR. THE SEEP FLOW FROM SW-59 WILL BE ISOLATED FROM THE SOUTH WALNUT CREEK DRAINAGE AND COLLECTED SEPARATELY FROM CS-61 BY DIVERSION INTO A SUMP. FOR COST ESTIMATING PURPOSES, IT IS ASSUMED THAT A 500-GALLON CAPACITY,PRECAST CONCRETE SUMP WILL BE USED. SUBMERSIBLE PUMPS AND LEVEL CONTROLS WILL AUTOMATICALLY TRANSFER THE COLLECTED WATER TO THE TREATMENT SYSTEM. THE PUMPING CAPACITY WILL BE DESIGNED TO ACCOMMODATE THE 4.5-GPM DESIGN FLOW FOR CS-59. ALTHOUGH UNLIKELY, IF THE INFLOW TO THE CS-59 PUMP STATION EXCEEDS THE PUMPING CAPACITY, THE EXCESS FLOW WILL BE DISCHARGED TO SOUTH WALNUT CREEK VIA AN OVERFLOW PIPE. THE OVERFLOW WILL ENTER SOUTH WALNUT CREEK UPGRADIENT OF CS-61 AND WILL EITHER BE COLLECTED BY, OR ALLOWED TO PASS, CS-61 DEPENDING ON WHETHER THE CREEK FLOW IS LESS THAN OR GREATER THAN THE 37.5 GPM DESIGN FLOW FOR CS-61. THE FLOW AT SW-132 WILL BE COLLECTED AND TRANSFERRED TO THE TREATMENT SYSTEM IN THE SAME MANNER AS FOR FLOW AT SW-61. CS-132 WILL BE DESIGNED, HOWEVER, TO DIVERT AND COLLECT 18 GPM. FOR COST ESTIMATING PURPOSES, A 1,000-GALLON PRE-CAST CONCRETE SUMP WILL BE USED.

ALL SUMPS AND PIPES WILL BE PROVIDED WITH SECONDARY CONTAINMENT TO MEET RCRA TANK REGULATIONS. PIPELINES WILL BE HEAT TRACED AND INSULATED TO PREVENT FREEZING IN THE WINTER.

4.3.1.2 EFFECTIVENESS

COLLECTION OF OU 2 SURFACE WATER IN THE SOUTH WALNUT CREEK BASIN BY DIVERSION AT THE SOURCES IS AN EFFECTIVE METHOD THAT SATISFIES THE OBJECTIVES OF THE IM/IRA DISCUSSED IN SECTION 3.1. MINIMIZATION OF POTENTIAL THREATS TO HUMAN HEALTH AND THE ENVIRONMENT IS ACHIEVED BY DIVERTING, COLLECTING, AND TREATING CONTAMINATED SURFACE WATERS AT OR NEAR THE SOURCE. DOWNSTREAM CONTAMINANT MIGRATION VIA SURFACE WATER AND GROUND WATER AND RELEASE OF VOCS TO THE ATMOSPHERE IS MINIMIZED WITH THIS SURFACE WATER COLLECTION SYSTEM. THE IMPLEMENTATION OF THIS COLLECTION ACTION SHOULD NOT ADVERSELY AFFECT THE SAFETY OF NEARBY COMMUNITIES, AND THE RISK TO THE ENVIRONMENT SHOULD NOT BE INCREASED.

THE SURFACE WATER IS COLLECTED AND AUTOMATICALLY TRANSFERRED TO THE TREATMENT SYSTEM WITH LITTLE OPPORTUNITY FOR WORKER CONTACT. AS A RESULT WORKER EXPOSURE TO POTENTIALLY CONTAMINATED SURFACE WATER IS MINIMIZED. WHERE WORKER EXPOSURE TO SURFACE WATER OCCURS (I.E., SEDIMENT REMOVAL), PUMPING EQUIPMENT MINIMIZES CONTACT TIME, AND STANDARD PERSONAL PROTECTIVE EQUIPMENT WILL OFFER A HIGH DEGREE OF PROTECTION.

RESIDUALS (I.E., COLLECTED SEDIMENTS) WILL NOT REMAIN ON SITE; THEY WILL BE TREATED OR DISPOSED ACCORDING TO THE STANDARD RFP WASTE MANAGEMENT PROCEDURES AND PROJECT-SPECIFIC SOPS. THE SOPS WILL BE PREPARED AFTER THE IM/IRA DESIGN IS FINALIZED TO ADDRESS SPECIFIC WASTE HANDLING ACTIVITIES. THE COLLECTION STRUCTURES ARE SIMPLE IN DESIGN, AND WILL REQUIRE LITTLE PERIODIC PREVENTIVE MAINTENANCE TO ENSURE CONTINUED RELIABILITY OVER THE LIFE OF THE IM/IRA.

4.3.1.3 IMPLEMENTABILITY

THE EQUIPMENT AND MATERIALS REQUIRED TO CONSTRUCT THE SURFACE WATER DIVERSION AND COLLECTION SYSTEMS ARE STANDARD AND READILY AVAILABLE. THE SYSTEMS ARE STANDARD IN DESIGN AND DO NOT REQUIRE SPECIAL SKILLS FOR INSTALLATION. SUMP INSTALLATION MAY RESULT IN DISTURBANCE OF

POTENTIALLY CONTAMINATED SOILS AND POTENTIAL IMPACT TO THE ENVIRONMENT BY RELEASE OF CONTAMINATED DUST TO THE ATMOSPHERE AND RELEASE OF CONTAMINATED SOIL VIA SURFACE WATER RUNOFF. THIS IMPACT WILL BE MINIMIZED BY IMPLEMENTING PROJECT-SPECIFIC HEALTH AND SAFETY PLAN PROCEDURES DURING CONSTRUCTION (E.G., DUST SUPPRESSION, WINDSPEED MONITORING/CONSTRUCTION SHUTDOWN). THE HEALTH AND SAFETY GUIDANCE DOCUMENTS PERTINENT TO THIS IM/IRA PLAN ARE DISCUSSED IN SECTION 7. THE PROPOSED COLLECTION SYSTEM LOCATIONS ARE EASILY ACCESSIBLE AND POWER EXISTS IN THE AREA. SINCE THE COLLECTION SYSTEMS ARE SIMPLE IN DESIGN THEY SHOULD OFFER RELIABLE AND RELATIVELY MAINTENANCE-FREE OPERATION OVER THE LIFE OF THE IM/IRA. MANHOLES AND SUMPS WILL REQUIRE PERIODIC CLEANING TO REMOVE ACCUMULATED SOLIDS.

4.3.1.4 COSTS

ASSUMED CAPITAL AND OPERATING COSTS FOR THE SURFACE WATER DIVERSION ALTERNATIVE ARE SHOWN IN TABLE 4-6. THE COLLECTION SYSTEM CAN BE

CONSTRUCTED FOR $203,500, WITH ANNUAL OPERATION AND MAINTENANCE COSTS OF $14,600. AT AN INTEREST RATE OF 10 PERCENT AND AN OPERATING LIFE OF 30 YEARS, THE PRESENT WORTH OF THIS SYSTEM IS APPROXIMATELY $341,100.

4.4. EVALUATION OF SURFACE WATER TREATMENT TECHNOLOGIES

4.4.1 SUSPENDED SOLIDS REMOVAL

IN THIS SECTION, CHEMICAL TREATMENT/CROSS-FLOW MEMBRANE FILTRATION (IN THIS DOCUMENT "CHEMICAL TREATMENT" IS OFTEN DROPPED FROM "CHEMICAL TREATMENT/CROSS-FLOW MEMBRANE FILTRATION" FOR BREVITY) AND GRANULAR MEDIA FILTRATION USING A POLYMER AND CONTINUOUS BACKWASH FILTER ARE EVALUATED TO DETERMINE THE COST-EFFECTIVE TECHNOLOGY FOR SUSPENDED SOLIDS REMOVAL. THESE TWO PROCESSES DIFFER FROM CONVENTIONAL WATER CLARIFICATION (CHEMICAL ADDITION FOLLOWED BY GRAVITY SEPARATION AND FILTRATION) BY VIRTUE OF THE LOWER SLUDGE VOLUMES GENERATED. AS DISCUSSED IN THE FOLLOWING SUBSECTIONS, EACH OF THESE TECHNOLOGIES WILL ALSO REMOVE RADIONUCLIDES AND METALS TO A CERTAIN DEGREE.

4.4.1.1 CROSS-FLOW MEMBRANE FILTRATION

DESCRIPTION

CROSS-FLOW MEMBRANE FILTRATION IS A MEMBRANE SEPARATION TECHNOLOGY FOR REMOVAL OF SUSPENDED SOLIDS, DISSOLVED METALS, AND RADIONUCLIDES. (CHEMICAL ADDITION AND REMOVAL MECHANISMS FOR DISSOLVED METALS AND RADIONUCLIDES ARE DISCUSSED IN SECTION 4.4.2.1.) AS SHOWN IN FIGURE 4-5, THE PROCESS CONSISTS OF CHEMICAL ADDITION, FILTRATION THROUGH A 0.1 M FILTER, SOLIDS RECIRCULATION, SOLIDS SEPARATION AND DEWATERING, AND FINAL NEUTRALIZATION. AS DISCUSSED IN MORE DETAIL IN SECTION 4.4.2.1, CHEMICAL ADDITION IS A PRETREATMENT STEP FOR INITIATING PRECIPITATION, CO-PRECIPITATION, AND ADSORPTION OF METALS, I.E., CONVERSION TO THE SOLID PHASE. HOWEVER, THE SOLIDS WILL AID IN THE REMOVAL OF INFLUENT SUSPENDED SOLIDS BY COAGULATION OF FINE PARTICLES AND/OR ENMESHMENT IN THE HYDROUS METAL OXIDE FLOCS. THE PRETREATED FEED COMBINES WITH THE RECYCLE STREAM (2 TO 5 PERCENT SOLIDS) FROM THE MEMBRANE FILTRATION UNIT AND IS SUBSEQUENTLY FILTERED MECHANICALLY. THE MEMBRANE FILTER IS IN A SHELL AND TUBE CONFIGURATION WITH THE MEMBRANE ON THE INSIDE OF THE TUBES. THE PERMEATE PASSES THROUGH THE TUBES PERPENDICULAR TO THE MAIN FLOW AT A LOW OPERATING PRESSURE. THE FLUX THROUGH THE FILTER IS HIGH

RELATIVE TO OTHER MEMBRANE TECHNOLOGIES, E.G., REVERSE OSMOSIS AND ULTRAFILTRATION, BECAUSE OF THE LARGE PORE DIAMETER OF THE FILTER. FLUX RATES OF 200 TO 400 GALLONS PER SQUARE FOOT PER DAY (GAL/FT/D) ARE TYPICAL FOR THE MEMBRANE. A FRACTION OF THE RECYCLE SLURRY IS BLED OFF FOR SOLIDS REMOVAL THROUGH GRAVITY SEPARATION AND MECHANICAL DEWATERING. THE PERMEATE (FLOW PASSING THROUGH THE FILTER) IS NEUTRALIZED BY ADDITION OF SULFURIC ACID PRIOR TO DISCHARGE.

FOR THE SURFACE WATER IM/IRA, IT IS ASSUMED FOR COSTING PURPOSES THAT A MODULAR AND SKID-MOUNTED UNIT WILL BE REQUIRED, WITH AN ASSUMED OUTPUT

CAPACITY OF 40 TO 80 GPM AND APPROXIMATELY 40 KILOWATTS (KW) OF POWER. THE UNIT WOULD CONTAIN THE FOLLOWING COMPONENTS:

* 2 1200-GALLON REACTION TANKS;
* 1 3000-GALLON CONCENTRATION TANK;
* 1 700-GPM RECIRCULATION PUMP
* 1 CLEANING SYSTEM; AND
* 28 TUBULAR MEMBRANE FILTRATION MODULES.

AUXILIARY TANKS AND PROCESS EQUIPMENT WOULD INCLUDE:

* 2 250-GALLON CHEMICAL FEED TANKS;
* 1 1500-GALLON SOLIDS SEDIMENTATION TANK;
* 1 10-CUBIC-FEET PER DAY PLATE AND FRAME FILTER PRESS FOR SLUDGE DEWATERING; AND
* 1 10,000-GALLON FEED EQUALIZATION TANK.

EFFECTIVENESS

CROSS-FLOW MEMBRANE FILTRATION IS EFFECTIVE AT REMOVAL OF SUSPENDED SOLIDS. THERE ARE NUMEROUS APPLICATIONS OF THIS TECHNOLOGY IN USE THROUGHOUT THE UNITED STATES. EFFLUENT SUSPENDED SOLIDS CONCENTRATIONS ARE LESS THAN 1 MG/L (TIEPEL AND SHORR, 1985). BECAUSE THE RADIONUCLIDES AND METALS ARE LARGELY ASSOCIATED WITH THE SUSPENDED SOLID FRACTION (SEE SECTION 4.4.2.1), SIMPLE SUSPENDED SOLIDS REMOVAL IS ANTICIPATED TO REMOVE GREATER THAN 99 PERCENT OF THESE CONSTITUENTS. TOXICITY OF CONTAMINATED SURFACE WATERS IS THUS SIGNIFICANTLY REDUCED IN TERMS OF POTENTIAL FUTURE RADIONUCLIDES AND METALS EXPOSURE, AND IT IS LIKELY THAT THE ARARS WILL BE ACHIEVED WITH THE PROPER CHEMICAL FEED. TREATED WATER WILL BE MONITORED TO ENSURE CONTAMINANTS ARE WITHIN REGULATORY GUIDELINES. CROSS-FLOW MEMBRANE FILTRATION PROVIDES RELIABLE AND AUTOMATED SURFACE WATER TREATMENT SERVICE REQUIRING MINIMAL OPERATOR INTERVENTION. WORKERS CAN BE EASILY TRAINED ON THE SAFE OPERATION OF THE UNIT AND HANDLING OF DEWATERED SOLIDS. THIS, TOGETHER WITH HEALTH AND SAFETY DESIGN CONSIDERATIONS (TRAILER VENTING, ALARM/EMERGENCY SHUTDOWN SYSTEMS, AUTOMATED CLEAN-IN-PLACE EQUIPMENT, ETC.) PROVIDES A HIGH DEGREE OF WORKER PROTECTION. SLUDGES GENERATED BY THE CROSS-FLOW MEMBRANE FILTRATION PROCESS WILL BE HANDLED ACCORDING TO THE RFP STANDARD WASTE MANAGEMENT PROCEDURES AND PROJECT-SPECIFIC SOPS.

IMPLEMENTABILITY

CROSS-FLOW MEMBRANE FILTRATION AS DESCRIBED ABOVE HAS BEEN USED IN INDUSTRY AND MUNICIPALITIES FOR WASTEWATER TREATMENT AND FOR GROUNDWATER AND SURFACE WATER REMEDIATION SINCE 1979. THERE ARE HUNDREDS OF UNITS IN OPERATION TODAY DEMONSTRATING THAT CROSS-FLOW MEMBRANE FILTRATION IS A RELIABLE PROCESS. THE HIGH SOLIDS CONTENT OF THE RECYCLE FLOW PRODUCES

SCOUR ACTION ON THE MEMBRANE, MINIMIZING FOULING AND THUS THE CLEANING FREQUENCY (1 HOUR EVERY 40 TO 80 HOURS OF OPERATION). THE MEMBRANE, AN INERT FLUOROCARBON MATERIAL, CAN BE CLEANED WITH STRONG OXIDANTS

(HYPOCHLORITE) TO REMOVE BACTERIAL FILMS, OR STRONG ACIDS OR BASES TO REMOVE DEPOSITED METAL HYDROXIDES. THE MEMBRANE WILL NOT DEGRADE IN THE PRESENCE OF THE DILUTE CONCENTRATIONS OF THE SOLVENTS IN THE SURFACE WATER. THE EQUIPMENT REQUIRED TO CONSTRUCT A CROSS-FLOW MEMBRANE FILTRATION SYSTEM IS STANDARD AND READILY AVAILABLE AND SPECIAL SKILLS ARE NOT REQUIRED FOR INSTALLATION. OFF-SITE PERMITTED DISPOSAL FACILITIES ARE AVAILABLE FOR DISPOSAL OF TREATMENT RESIDUALS.

THE DEMONSTRATED PERFORMANCE AND ANTICIPATED EFFECTIVENESS FOR REMEDIATING OU 2 SURFACE WATERS COLLECTED FROM SOUTH WALNUT CREEK BASIN SHOULD RESULT IN A HIGH DEGREE OF PUBLIC ACCEPTANCE OF CROSS-FLOW MEMBRANE FILTRATION.

COSTS

ASSUMED CAPITAL AND OPERATIONAL COSTS FOR THE CROSS-FLOW MEMBRANE FILTRATION SYSTEM ARE SHOWN IN TABLE 4-7. NOTE THAT SINCE THE ECONOMIC ANALYSIS OF THE TREATMENT ALTERNATIVES IS A COMPARATIVE ONE, PROCESS STREAM MONITORING AND ANALYSIS COSTS ARE NOT INCLUDED IN THE COST ESTIMATE FOR CROSS-FLOW MEMBRANE FILTRATION OR OTHER TREATMENT UNITS EXAMINED IN THIS SECTION SINCE THESE COSTS ARE COMMON TO ALL TREATMENT UNITS. IN CALCULATING SLUDGE DISPOSAL COSTS, VALUES FOR INFLUENT SUSPENDED SOLIDS CONCENTRATION (350 PPM) AND AVERAGE ANNUAL YEAR-ROUND INFLUENT FLOW (20 GPM) WERE ESTIMATED. THE INFLUENT SUSPENDED SOLIDS CONCENTRATION IS BASED ON A FLOW-WEIGHTED AVERAGE CONCENTRATION CALCULATION SIMILAR TO THAT USED FOR CALCULATING THE INFLUENT CONTAMINANT CONCENTRATIONS IN TABLE 4-1. THE SUSPENDED SOLIDS CONCENTRATION DATA USED IN THE COMPUTATION WAS OBTAINED FROM THE 1987, 1988 AND 1989 FIELD INVESTIGATIONS. THE AVERAGE YEAR-ROUND INFLUENT FLOW OF 20 GPM IS ESTIMATED IN SECTION 4.3.1.1. A CROSS-FLOW MEMBRANE FILTRATION SYSTEM CAN BE INSTALLED FOR $486,500, WITH ANNUAL OPERATION AND MAINTENANCE COSTS OF $249,000 PER YEAR. ASSUMING A 10 PERCENT INTEREST RATE AND A 30-YEAR OPERATING LIFE, THE PRESENT WORTH OF THE SYSTEM IS $2,833,500.

4.4.1.2 GRANULAR MEDIA FILTRATION

DESCRIPTION

THE CONTINUOUS BACKWASH, CONTINUOUS UPFLOW SAND FILTER WAS INTRODUCED TO THE UNITED STATES IN 1979 (HETZER, 1987). AS SHOWN IN FIGURE 4-6, POLYMER IS INJECTED INTO THE SURFACE WATER, FOLLOWED BY RAPID MIXING IN AN IN-LINE STATIC MIXER. WATER RISES THROUGH THE BED WHERE FLOCCULATION, COAGULATION AND FLOC REMOVAL OCCUR. CLEAN WATER OVERFLOWS A WEIR AT THE TOP OF THE SAND BED. AS THE WATER RISES, SAND MOVES DOWNWARD THROUGH THE BED COUNTERCURRENT TO THIS FLOW OF WATER. THIS DOWNWARD MOTION IS INDUCED BY AN AIR LIFT SYSTEM IN THE CENTER OF THE BED (CENTRALIZED PIPE WITH AIR INJECTION AT THE BASE) THAT DRAWS THE SAND UPWARD. TURBULENT FLOW IS CREATED IN THIS AIR LIFT, SCOURING THE DIRT FROM THE SAND. THE DIRT/SAND SLURRY SPILLS OVER AT THE TOP OF THE

AIRLIFT INTO A COMPARTMENT WITH A PERFORATED BOTTOM AND OVERFLOW WEIR. THE RAPIDLY SETTLING SAND SEPARATES FROM THE DIRT IN THIS COMPARTMENT, AND THE CLEAN SAND IS RETURNED TO THE TOP OF THE SAND BED. THE DIRTY WATER EXITING THE FILTER WOULD BE DIRECTED TO A SEDIMENTATION TANK, AND THE OVERFLOW FROM THIS TANK SENT BACK TO THE FILTER. THE SOLIDS FROM THIS TANK WILL REQUIRE DEWATERING AND DISPOSAL WASTE MANAGEMENT OPERATING PROCEDURES. CONTINUOUS UPFLOW SAND FILTERS ARE TYPICALLY DESIGNED BASED ON A HYDRAULIC LOADING OF 4-5 GPM/SQUARE FEET. FOR THE SURFACE WATER IM/IRA, A PACKAGED FIBERGLASS UNIT WITH FILTRATION AREA OF 12 SQUARE FEET, A DIAMETER OF 4 FEET, A HEIGHT OF 12 FEET WITH A SAND BED DEPTH OF 40 INCHES (3.3 TONS OF SAND), AND REQUIRING 0.5 TO 1.5 STANDARD CUBIC FEET PER MINUTE (SCFM) OF AIR AT 15 TO 25 POUNDS PER SQUARE INCH (PSI) WOULD BE APPLICABLE. A 10,000-GALLON SETTLING TANK AS WELL AS A SLUDGE CONDITIONING AND DEWATERING SYSTEM WILL ALSO BE REQUIRED.

EFFECTIVENESS

GRANULAR MEDIA FILTRATION WITH POLYMER ADDITION IS AS EFFECTIVE AT REMOVAL OF SUSPENDED SOLIDS AS CONVENTIONAL FLOCCULATION/COAGULATION AND RAPID SAND FILTRATION. PLUTONIUM, AMERICIUM, METALS AND, TO A LESSER EXTENT, URANIUM WILL BE LARGELY REMOVED IN THIS UNIT BECAUSE PLUTONIUM AND AMERICIUM EXIST PREDOMINANTLY AS COLLOIDS IN NATURAL WATERS (ORLANDINI, 1990). THE UNIT OPERATION EQUIPMENT IS SIMPLE IN DESIGN, OFFERS OPERATIONAL RELIABILITY, AND REQUIRES NO SPECIAL SKILLS FOR INSTALLATION. WORKERS CAN BE EASILY TRAINED ON THE SAFE OPERATION OF THE UNIT AND HANDLING OF DEWATERED SOLIDS. THIS, TOGETHER WITH HEALTH AND SAFETY DESIGN CONSIDERATIONS, PROVIDES A HIGH DEGREE OF WORKER PROTECTION. THE EFFLUENT FROM THIS SYSTEM WILL BE SUITABLE FOR SUBSEQUENT DOWNSTREAM TREATMENT FOR DISSOLVED RADIONUCLIDE, METALS AND ORGANICS REMOVAL.

IMPLEMENTABILITY

GRANULAR MEDIA FILTRATION WITH POLYMER ADDITION IS A DEMONSTRATED TECHNOLOGY WITH REGARD TO SUSPENDED SOLIDS REMOVAL. CONTINUOUS UPFLOW SAND FILTERS ARE PARTICULARLY SUITABLE FOR SMALL WATER TREATMENT PLANTS WHERE OPERATING PERSONNEL ARE LIMITED. THEY OPERATE CONTINUALLY WITHOUT THE NEED TO BE SHUT DOWN FOR BACKWASHING BECAUSE THEY ARE SELF-CLEANING AND HAVE NO MOVING PARTS. THE UNIT OPERATION EQUIPMENT REQUIRED (I.E., CONTINUOUS UPFLOW FILTER, IN-LINE STATIC MIXERS, FILTER PRESS, ETC.) ARE STANDARD AND READILY AVAILABLE. THE UPFLOW FILTER WITH CONTINUOUS BACKWASH IS AVAILABLE AS A COMPLETE UNIT AND A MINIMAL AMOUNT OF STRUCTURAL MOUNTING AND PIPING IS REQUIRED TO PLACE IT INTO SERVICE.

OFF-SITE PERMITTED DISPOSAL FACILITIES ARE AVAILABLE FOR DISPOSAL OF TREATMENT RESIDUALS. THE DEMONSTRATED PERFORMANCE AND ANTICIPATED EFFECTIVENESS AND RELIABILITY OF GRANULAR MEDIA FILTRATION SHOULD RESULT IN ACCEPTANCE OF THE TECHNOLOGY BY THE PUBLIC.

COSTS

RELATIVE TO CONVENTIONAL SUSPENDED SOLIDS REMOVAL, GRANULAR MEDIA FILTRATION WITH POLYMER ADDITION IS COST EFFECTIVE IN TERMS OF BOTH CAPITAL AND OPERATING EXPENSES. ASSUMED CAPITAL AND OPERATIONAL COSTS FOR THE CONTINUOUS UPFLOW SAND FILTER AND APPURTENANCES ARE SHOWN IN TABLE 4-8. THE SYSTEM CAN BE INSTALLED FOR $167,100, WITH ANNUAL

OPERATION AND MAINTENANCE COSTS OF $82,700 PER YEAR. ASSUMING A 10 PERCENT INTEREST RATE AND 30-YEAR OPERATING LIFE, THE PRESENT WORTH OF THE SYSTEM IS $946,700.

4.4.2.1 CROSS-FLOW MEMBRANE FILTRATION

DESCRIPTION

THE CROSS-FLOW MEMBRANE FILTRATION SYSTEM (AS APPLIED TO SUSPENDED SOLIDS REMOVAL) WAS PREVIOUSLY DISCUSSED IN SECTION 4.4.1.1. IN THIS SECTION THE CHEMISTRY AND REMOVAL MECHANISMS FOR RADIONUCLIDES AND METALS, AS APPLIED TO CROSS-FLOW MEMBRANE FILTRATION, ARE DISCUSSED.

THERE ARE FIVE OXIDATION STATES OF PLUTONIUM (PU) IN AQUEOUS SOLUTIONS: PU(III), PU(IV), PU(V), PU(VI), AND PU(VII). HOWEVER, UNDER THE OXIDIZING AND NEAR-NEUTRAL CONDITIONS EXPECTED IN THE SURFACE WATER, THE PU(IV) OXIDATION STATE IS THE MOST STABLE (CLEVELAND, 1979). PU(IV) IS PRACTICALLY INSOLUBLE UNDER THESE CONDITIONS BECAUSE IT READILY HYDROLYZES TO FORM PU(OH)4(S) AND, UPON LOSS OF WATER, TO PRODUCE THE THERMODYNAMICALLY STABLE PUO2(S). THIS SOLID PHASE IS A COLLOIDAL POLYMER OF NEUTRAL OR POSITIVE CHARGE. INCREASING PH TENDS TO REDUCE THE CHARGE DENSITY OF THE POLYMER, AND AT PHS ABOVE 9 IT IS PRESUMED THAT THE COLLOID BECOMES NEGATIVELY CHARGED. THIS REDUCTION IN CHARGE DENSITY AND EVENTUAL CONVERSION TO AN ANIONIC FORM AT PHS ABOVE 9 DECREASES ITS ADSORPTION AFFINITY FOR SOILS AND THUS INCREASES ITS MOBILITY IN THE SOIL/WATER ENVIRONMENT. IN SOLUTION, PU(V) AND PU(VI) COEXIST AS IONS WITH THE PU(IV) POLYMER. AT A PH OF 8, THE DOMINANT IONIC FORM OF PLUTONIUM MAY BE PUO2CO3OH- OCCURRING AT A CONCENTRATION OF APPROXIMATELY (10-12)M (1.5 X (10-5) PCI/L). HOWEVER, THE SOLUBILITY OF PLUTONIUM CAN BE INCREASED THROUGH COMPLEXATION WITH HUMIC ACIDS.

AMERICIUM (AM) HAS ONE OXIDATION STATE IN AQUEOUS SOLUTIONS: AM (III). UNDER OXIDIZING AND NEAR-NEUTRAL CONDITIONS EXPECTED IN SURFACE WATER, AM (III) STRONGLY COMPLEXES WITH COLLOIDAL MATERIAL AND SHOULD EXIST IN THE PARTICULATE FRACTION (ORLANDINI, 1990).

THERE ARE FOUR OXIDATION STATES OF URANIUM IN AQUEOUS SOLUTIONS: U(III), U(IV), U(V), AND U(VI) (SORG, 1987). U(III) AND U(V) ARE UNSTABLE, AND U(VI) IS THE THERMODYNAMICALLY PREDICTED OXIDATION STATE OF URANIUM UNDER OXIDIZING CONDITIONS. U(VI) PREDOMINANTLY EXISTS AS THE URANYL ION (UO2(2+)). THE URANYL ION READILY COMPLEXES WITH THE COMMON ANIONS CHLORIDE, SULFATE, NITRATE, AND CARBONATE. IN WATER WITH CARBONATE ALKALINITY AND A PH RANGE OF 7-10, THE DOMINANT SOLUBLE SPECIES OF U(VI)

ARE UO2(CO3)2(2-) AND UO2(CO3)3(4-). AT PH EXCEEDING 9.5, THE URANIUM HYDROXIDE COMPLEX (UO2)3(OH)(5+) BECOMES PREDOMINANT. UNLIKE PLUTONIUM, URANIUM IS SIGNIFICANTLY MORE SOLUBLE IN WATER.

SOLUBLE PLUTONIUM, AMERICIUM, URANIUM AND METALS ARE REMOVED FROM SOLUTION IN THE CROSS-FLOW MEMBRANE FILTRATION PROCESS BY ADSORPTION ON A FERRIC HYDROXIDE FLOC. THE MOST EFFECTIVE REMOVAL OF URANIUM BY CONVENTIONAL COAGULATION USING IRON SALTS IS AT A PH GREATER THAN 9.5. THIS IS PRESUMED TO BE DUE TO THE PREDOMINANCE OF THE POSITIVELY CHARGED URANIUM HYDROXIDE ION IN THE PRESENCE OF THE NEGATIVELY CHARGED FERRIC HYDROXIDE (SORG, 1987). BECAUSE THE PREDOMINANT FORM OF PLUTONIUM AND MOST METALS IN THE SURFACE WATER IS PARTICULATE, THE CROSS-FLOW MEMBRANE FILTRATION PROCESS WILL REMOVE THIS RADIONUCLIDE FROM THE INFLUENT THROUGH ADSORPTION TO, AND ENMESHMENT IN, THE FERRIC HYDROXIDE.

FERRIC SULFATE (FE2(SO4)3) IS THE IRON SALT OF CHOICE FOR INTRODUCING FERRIC IRON TO THE INFLUENT STREAM. BECAUSE OF THE HYDROLYSIS OF FERRIC IRON, THE PH DROPS TO 2 OR 3, WHICH FACILITATES DISSOLUTION OF THE IRON SALT. THE FERRIC SULFATE IS AUTOMATICALLY FED IN DRY FORM TO THE INFLUENT IN REACTION TANK NO. 1 (SEE FIGURE 4-5). THE FERRIC ION WILL RAPIDLY HYDROLYZE AT HIGH PH (9 TO 11) TO FORM FERRIC HYDROXIDE FE(OH)3(S). HYDRATED LIME (CA(OH)2) IS AUTOMATICALLY ADDED IN REACTION TANK NO. 2, AND IS USED TO RAISE THE PH, WHICH ALSO IMPROVES THE COMPRESSIBILITY OF THE FERRIC HYDROXIDE SLUDGE. IN SURFACE WATER TREATMENT APPLICATIONS, IRON AND LIME CONSUMPTION IS TYPICALLY 0.3 LBS AND 1 LB, RESPECTIVELY, PER 1,000 GALLONS OF INFLUENT. THESE ESTIMATES WILL BE MADE MORE EXACT BASED ON THE BENCH AND FIELD-SCALE TREATABILITY STUDIES DESCRIBED IN SECTION 6. AN ADJUSTMENT WITH A PH CONTROLLER WILL BE REQUIRED PRIOR TO DISCHARGE OF THE PERMEATE TO MAINTAIN THE EFFLUENT IN A PH RANGE OF 6 TO 9.

EFFECTIVENESS

ALTHOUGH LIMITED, THERE IS DATA DEMONSTRATING THE REMOVAL OF PLUTONIUM FROM WATER USING CROSS-FLOW MEMBRANE FILTRATION. THE ONLY DATA AVAILABLE IS FROM A STUDY PERFORMED AT THE RFP USING A SMALL-SCALE, CROSS-FLOW MEMBRANE FILTRATION UNIT (LESS THAN 1 GPM) TREATING PLUTONIUM- AND URANIUM-CONTAMINATED LAUNDRY WASTEWATER. RESULTS ARE SHOWN BELOW:

	CONCENTRATION (PCI/L)	
PARAMETER	INFLUENT	EFFLUENT
GROSS ALPHA	2,480	5.3
GROSS BETA	3,933	8.9
TOTAL URANIUM	1,238	2.25
PLUTONIUM	63.4	0.25

THE PLUTONIUM REMOVAL EFFICIENCY INDICATED BY THESE TEST RESULTS IS GREATER THAN 99 PERCENT. OTHER DATA FROM PREVIOUS TEST RUNS ON LAUNDRY

WASTE WATER INDICATED EFFLUENT PLUTONIUM CONCENTRATIONS LESS THAN THE DETECTION LIMIT (0.1 PCI/L). CONSIDERING THE COMPLEXING AGENTS PRESENT IN LAUNDRY WATER, IT IS POSSIBLE THAT THE CROSS-FLOW MEMBRANE FILTRATION PROCESS CAN MEET THE ARAR FOR PLUTONIUM OF 0.05 PCI/L. USING THE PERCENT PLUTONIUM REMOVAL FOR THE ABOVE REPORTED TEST AND THE EXPECTED INFLUENT CONCENTRATION OF PLUTONIUM TO THE TREATMENT FACILITY, THE ARAR WILL BE ACHIEVED BASED ON THEORETICAL CALCULATIONS.

DATA DEMONSTRATING REMOVAL OF AMERICIUM FROM NATURAL WATERS IS NOT AVAILABLE AT THE TIME OF THIS WRITING. HOWEVER, AMERICIUM'S STRONG AFFINITY FOR PARTICULATES IN NATURAL WATERS SUGGESTS THAT AMERICIUM SHOULD BE REMOVED FROM SOUTH WALNUT CREEK BASIN SURFACE WATERS BY CROSS-FLOW MEMBRANE FILTRATION VIA THE SUSPENDED SOLIDS REMOVAL MECHANISMS. THIS OBSERVATION IS SUPPORTED BY EXAMINATION OF THE DISSOLVED AND TOTAL AMERICIUM CONCENTRATIONS DETECTED IN SOUTH WALNUT CREEK BASIN SURFACE WATER SAMPLES (APPENDIX B). EXAMINATION OF THESE DATA REVEALS THAT THERE WERE NO INSTANCES WHERE DISSOLVED AMERICIUM CONCENTRATIONS EXCEEDED THE ARAR. TOTAL AMERICIUM CONCENTRATIONS (I.E., DISSOLVED PLUS PARTICULATE), HOWEVER, EXCEEDED THE ARAR ON SEVERAL OCCASIONS.

BECAUSE OF ITS UBIQUITY IN WATER SUPPLIES, THERE IS CONSIDERABLY MORE INFORMATION ON THE REMOVAL OF URANIUM DURING WATER TREATMENT. URANIUM REMOVAL EFFICIENCIES HAVE BEEN REPORTED FOR CONVENTIONAL COAGULATION/FILTRATION WATER TREATMENT, AND DATA EXIST FOR CROSS-FLOW MEMBRANE FILTRATION USED AT THE RFP AND AT URANIUM MILL TAILINGS REMEDIAL ACTION (UMTRA) SITES. THE UMTRA PROJECT IS A DOE-SPONSORED PROGRAM TO CLEAN UP LOW-LEVEL RADIOACTIVE URANIUM MILL TAILINGS AND ASSOCIATED CONTAMINATED SURFACE WATER RUNOFF IN ELEVEN WESTERN STATES AND PENNSYLVANIA. WITH REGARD TO CONVENTIONAL WATER TREATMENT, USING A DOSE OF 10 MG/L OF FERRIC SULFATE AS A COAGULANT WITH A PH OF 10, 80 PERCENT REMOVAL OF URANIUM HAS BEEN REPORTED (SORG, 1987). USE OF FERROUS SULFATE AT DOSES BETWEEN 20 TO 25 MG/L AND AT THE SAME PH RESULTED IN REMOVALS AS HIGH AS 92 TO 93 PERCENT. FOR CROSS-FLOW MEMBRANE FILTRATION, THE ABOVE-REPORTED TEST AT THE RFP INDICATES ACHIEVING GREATER THAN 99 PERCENT REMOVAL AND MEETING THE ARAR FOR URANIUM (10 PCI/L). AT THE CANONSBURG UMTRA SITE, WATER CONTAINING 4,400 PCI/L OF TOTAL URANIUM WAS TREATED TO ACHIEVE A TOTAL URANIUM CONCENTRATION OF LESS THAN 1 PCI/L. ALTHOUGH SPECIFIC DATA IS UNAVAILABLE, THE CROSS-FLOW MEMBRANE FILTRATION UNIT OPERATING AT THE DURANGO UMTRA SITE IS ACHIEVING EFFLUENT URANIUM CONCENTRATIONS BELOW THE COLORADO IN-STREAM STANDARDS FOR THAT AREA.

IT WOULD APPEAR THAT CROSS-FLOW MEMBRANE FILTRATION SHOULD BE EFFECTIVE FOR REMOVAL OF PLUTONIUM, AMERICIUM AND URANIUM AS WELL AS OTHER METALS FROM SOUTH WALNUT CREEK BASIN SURFACE WATER. ARARS SHOULD BE ACHIEVED FOR PLUTONIUM, AMERICIUM AND URANIUM, ALTHOUGH THERE IS LESS DATA AND CORRESPONDINGLY LESS CERTAINTY ON THE PERFORMANCE OF THE SYSTEM FOR PLUTONIUM AND AMERICIUM REMOVAL. ARARS FOR GROSS ALPHA AND GROSS BETA SHOULD ALSO BE ACHIEVED. THE GROSS ALPHA IS LARGELY FROM URANIUM AND

PARTICULATE FORMS OF PLUTONIUM AND AMERICIUM, AND MOST OF THE GROSS BETA ARISES FROM URANIUM 238 DAUGHTERS, E.G., THORIUM 243 AND PROTACTINIUM 234. THE THORIUM AND PROTACTINIUM PREDOMINANTLY EXIST IN THE PARTICULATE FRACTION AND SHOULD BE REMOVED BY CROSS-FLOW MEMBRANE FILTRATION VIA ADSORPTION ON IRON HYDROXIDE. ALTHOUGH CESIUM 137, POTASSIUM 40, LEAD 210, AND STRONTIUM 90 (WHICH ARE MORE SOLUBLE) ALSO CONTRIBUTE TO GROSS BETA ACTIVITY, THE SUCCESS OF THE CURRENT FILTRATION OPERATION TO LOWER THE GROSS BETA CONCENTRATION AT POND B-5 WOULD INDICATE THAT THEY ARE NOT SIGNIFICANT CONTRIBUTORS TO THE GROSS BETA ACTIVITY IN SOUTH WALNUT CREEK. REMOVAL OF THE RADIONUCLIDES SHOULD EFFECTIVELY REDUCE THE POTENTIAL THREAT TO THE PUBLIC HEALTH AND THE ENVIRONMENT. THE ARAR FOR TDS MAY NOT BE ACHIEVED WITH CROSS-FLOW MEMBRANE FILTRATION AS A RESULT OF THE ADDITION OF FERRIC SULFATE AND LIME TO THE PROCESS INFLUENT.

THE ARAR FOR TDS IS NOT A PUBLIC HEALTH-BASED STANDARD; RATHER, IT IS A SECONDARY DRINKING WATER STANDARD SET FOR AESTHETIC REASONS. THE BENCH AND FIELD-SCALE TREATABILITY STUDIES WILL PROVIDE TDS CONCENTRATION DATA OF TREATED EFFLUENT.

IMPLEMENTABILITY

SEE SECTION 4.4.1.1 FOR A DISCUSSION OF THE IMPLEMENTABILITY OF THE CROSS-FLOW MEMBRANE FILTRATION PROCESS.

COSTS

SEE SECTION 4.4.1.1 (TABLE 4-6) FOR A PRESENTATION OF THE ASSUMED

CAPITAL AND OPERATING AND MAINTENANCE COSTS OF THE CROSS-FLOW MEMBRANE FILTRATION PROCESS.

4.4.2.2 ION EXCHANGE

DESCRIPTION

THE ION EXCHANGE TREATMENT SYSTEM FOR THE REMOVAL OF RADIONUCLIDES CONSISTS OF A STRONG BASE ANION EXCHANGER FOLLOWED BY A WEAK ACID CATION EXCHANGER (FIGURE 4-7). THESE EXCHANGERS ARE DESIGNED FOR THE REMOVAL OF URANIUM AND PLUTONIUM/AMERICIUM, RESPECTIVELY. BOTH ION EXCHANGERS HAVE BEEN DESIGNED CONSERVATIVELY USING A HYDRAULIC LOADING LESS THAN 5 GPM/SQUARE FEET AND A BED CAPACITY LESS THAN 2 GPM/CUBIC FEET. THIS TRANSLATES TO A 4-FOOT DIAMETER COLUMN WITH A RESIN BED DEPTH OF 3 FEET. THE COLUMN WILL INCLUDE 100 PERCENT FREEBOARD. THIS FREEBOARD IS NECESSARY FOR RESIN EXPANSION DURING REGENERATION OR FOR BACKWASHING IF REQUIRED.

THE STRONG BASE ANION EXCHANGER WILL CONTAIN 37.5 CUBIC FEET OF ROHM AND HAAS IRA-402 RESIN OR EQUIVALENT IN THE CHLORIDE FORM. REGENERATION WILL NOT BE REQUIRED BECAUSE OF THE HIGH AFFINITY AND CAPACITY OF THE RESIN FOR URANIUM. THE EXPECTED LIFE OF THE UNIT IS GREATER THAN 30

YEARS AT THE EXPECTED INFLUENT URANIUM CONCENTRATION. ALTHOUGH OTHER ANIONS WILL BE ADSORBED TO THE RESIN, THE PREFERENTIAL ADSORPTION OF URANIUM OVER OTHER ANIONS IN SOLUTION WILL, OVER TIME, DISPLACE THESE ANIONS. THE SPENT RESIN WILL ULTIMATELY REQUIRE SOLIDIFICATION AND DISPOSAL AT THE NEVADA TEST SITE.

THE CATION EXCHANGER WILL CONTAIN 37.5 CUBIC FEET OF ROHM AND HAAS IRC-50 WEAK ACID CATION EXCHANGE RESIN OR EQUIVALENT IN THE SODIUM FORM. THIS RESIN HAS A HIGH AFFINITY FOR HIGH MOLECULAR WEIGHT METALS, E.G., MERCURY, COPPER, LEAD, AND ZINC. PUBLISHED INFORMATION ON THE REMOVAL OF PLUTONIUM AND AMERICIUM FROM NATURAL WATERS BY ION EXCHANGE HAS NOT BEEN FOUND. A CATION EXCHANGE RESIN WITH A HIGH AFFINITY FOR HEAVY METALS IS MOST LIKELY TO REMOVE PLUTONIUM AND AMERICIUM BECAUSE THESE CONSTITUENTS WILL PREDOMINANTLY EXIST AS COLLOIDS CARRYING A POSITIVE CHARGE. THE PERFORMANCE OF ION EXCHANGE FOR THE REMOVAL OF PLUTONIUM AND AMERICIUM IS UNKNOWN; HOWEVER, IT IS NOTED THAT MOST OF THE PLUTONIUM AND AMERICIUM SHOULD BE REMOVED DURING UPSTREAM SUSPENDED SOLIDS REMOVAL. THERE IS INSUFFICIENT INFORMATION TO DETERMINE THE FREQUENCY AT WHICH THE RESIN WILL REQUIRE REGENERATION. IT IS ASSUMED THAT, LIKE THE ANION EXCHANGER, THE CATION EXCHANGER WILL NOT REQUIRE REGENERATION OVER THE LIFE OF THE IM/IRA.

EFFECTIVENESS

ION EXCHANGE HAS BEEN PROVEN TO REMOVE HEAVY METALS AND URANIUM FROM WATER TO MEET THE ARARS, WHEREAS PLUTONIUM AND AMERICIUM REMOVAL USING THIS TECHNOLOGY IS UNPROVEN. ION EXCHANGE HAS BEEN USED TO REMOVE URANIUM FROM MINE WATER FOR MANY YEARS AND HAS BEEN STUDIED EXTENSIVELY BY EPA FOR THE REMOVAL OF URANIUM FROM DRINKING WATER (SORG, 1987). ION EXCHANGE IS COMMONLY USED FOR THE REMOVAL OF PLUTONIUM FROM STRONG ACID SOLUTIONS, BUT NO INFORMATION EXISTS ON THE USE OF ION EXCHANGE FOR THE REMOVAL OF PLUTONIUM (OR AMERICIUM) PRESENT IN NATURAL WATERS. THE ABSENCE OF PLUTONIUM AND AMERICIUM REMOVAL EFFICIENCIES IN ION EXCHANGE DOES NOT ALLOW CONCLUSIONS TO BE DRAWN WITH REGARD TO ITS EFFECTIVENESS IN REDUCING THE TOXICITY OF INFLUENT SOUTH WALNUT CREEK BASIN SURFACE

WATERS, AND THUS, PROTECTION OF HUMAN HEALTH AND THE ENVIRONMENT AND PUBLIC HEALTH.

AN ION EXCHANGE SYSTEM IS FOR THE MOST PART A SELF-CONTAINED AND AUTOMATED OPERATION. WORKERS MAY BE EASILY TRAINED ON THE SAFE OPERATION OF THE SYSTEM. THERE IS UNCERTAINTY AS TO WHETHER THE CATION EXCHANGER (I.E., PLUTONIUM AND AMERICIUM REMOVAL) WILL REQUIRE REGENERATION. THIS LENDS UNCERTAINTY AS TO THE VOLUME OF TREATMENT RESIDUALS THAT WILL BE GENERATED AS WELL AS THE DEGREE OF WORKER EXPOSURE IN HANDLING THE REGENERATION WASTES. THE ANION EXCHANGER WILL NOT REQUIRE REGENERATION, AS DISCUSSED EARLIER, AS THE URANIUM CARBONATE COMPLEX WILL PREFERENTIALLY DISPLACE MAJOR IONS THAT WILL INITIALLY LOAD ONTO THE RESIN.

IMPLEMENTABILITY

ION EXCHANGE IS A WELL ESTABLISHED TECHNOLOGY THAT HAS DEMONSTRATED LONG-TERM RELIABILITY AND PERFORMANCE IN WATER TREATMENT AND AFTER APPLICATIONS. THE VESSELS, PIPING AND PUMPS REQUIRED TO CONSTRUCT A SYSTEM ARE COMMERCIALLY AVAILABLE, OFF-THE-SHELF ITEMS. THE ANION AND CATION EXCHANGE RESINS, HOWEVER, ARE SPECIFIC TO EACH APPLICATION AND, AS SUGGESTED ABOVE, EFFECTIVE RESINS FOR PLUTONIUM AND AMERICIUM REMOVAL FROM SURFACE WATERS MAY NOT BE READILY AVAILABLE. IF THE WEAK ACID CATION EXCHANGER REQUIRES REGENERATION (I.E., PLUTONIUM AND AMERICIUM REMOVAL), AN ACID REGENERATION SYSTEM WOULD BE REQUIRED, AND THE WASTEWATER FROM REGENERATION WOULD REQUIRE STORAGE AND TREATMENT AT THE BUILDING 374 PROCESS WASTE TREATMENT SYSTEM (CHEMICAL PRECIPITATION/FLASH EVAPORATION). IF REGENERATION OF THE CATION EXCHANGE RESIN IS NOT REQUIRED, OPERATION AND MAINTENANCE REQUIREMENTS FOR THE SYSTEM WILL BE LOW. EFFLUENT WOULD BE ROUTINELY MONITORED FOR BREAKTHROUGH OF THE RADIONUCLIDES SHOWN IN TABLE 4-1. THE REMOVAL OF SUSPENDED SOLIDS IN A PRETREATMENT STEP IS REQUIRED TO PREVENT FOULING OF THE RESIN.

AT THIS TIME, THE DEGREE OF UNCERTAINTY ASSOCIATED WITH PLUTONIUM AND AMERICIUM REMOVAL SUGGESTS THE PUBLIC WILL NOT READILY ACCEPT ION EXCHANGE AS A PREFERRED TREATMENT TECHNOLOGY. DEMONSTRATION OF TECHNICAL FEASIBILITY THROUGH TREATABILITY STUDY TESTING IS NECESSARY.

COSTS

ASSUMED CAPITAL AND OPERATIONAL COST FOR THE ION EXCHANGE SYSTEM IS SHOWN IN TABLE 4-9. COSTS FOR PRETREATMENT OF THE INFLUENT FOR REMOVAL OF SUSPENDED SOLIDS ARE NOT CONSIDERED IN TABLE 4-9. THE SYSTEM CAN BE INSTALLED FOR $289,900, WITH ANNUAL OPERATION AND MAINTENANCE COSTS OF $45,400 PER YEAR. THE OPERATION AND MAINTENANCE COST ASSUMES THAT REGENERATION OF THE WEAK ACID CATION EXCHANGE RESIN WILL NOT BE REQUIRED. AT AN INTEREST RATE OF 10 PERCENT AND AN OPERATING LIFE OF 30 YEARS, THE PRESENT WORTH OF THE SYSTEM IS $717,900.

4.4.3 ORGANIC CONTAMINANT REMOVAL

4.4.3.1 ACTIVATED CARBON ADSORPTION

DESCRIPTION

WITH A GAC ADSORPTION SYSTEM, THE SURFACE WATER WILL BE PUMPED THROUGH

TWO GAC COLUMNS IN SERIES AND OPERATED IN DOWNFLOW FIXED-BED MODE (FIGURE 4-8). A SECOND SET OF GAC COLUMNS WILL BE MAINTAINED IN STOCK. EACH CARBON COLUMN IS 60 INCHES IN DIAMETER AND 87 INCHES HIGH, AND CONTAINS 2000 POUNDS OF CARBON. BASED ON A FLOW RATE OF 60 GPM, THE HYDRAULIC LOADING TO EACH COLUMN WILL BE APPROXIMATELY 3 GPM/FT. THE EMPTY BED CONTACT TIME FOR EACH COLUMN WILL BE APPROXIMATELY 18 MINUTES. TO COMPLETELY UTILIZE THE CARBON, COLUMNS ARE ARRANGED IN SERIES, ALLOWING THE LEAD COLUMN TO BECOME FULLY EXHAUSTED BEFORE REGENERATION

WHILE THE SECOND (POLISHING) COLUMN ENSURES EFFLUENT QUALITY. PERIODIC SAMPLES WILL BE TAKEN FROM THE EFFLUENT OF EACH UNIT, AND WHEN THE LEAD UNIT EFFLUENT EXCEEDS ARARS, THE LEAD CARBON COLUMN WILL BE REMOVED, THE POLISHING (SECOND) COLUMN WILL BECOME THE LEAD COLUMN, AND A STOCK CARBON UNIT WILL BE PUT IN SERVICE AS THE POLISHING UNIT. THE CARBON COLUMN WITH THE EXHAUSTED CARBON WILL THEN BE SHIPPED TO AN OFF-SITE LOCATION FOR REGENERATION.

EFFECTIVENESS

GAC ADSORPTION SYSTEMS HAVE BEEN SHOWN TO REMOVE VOCS FROM CONTAMINATED WATER TO LEVELS THAT COMPLY WITH THE ARARS. THE EPA (FEDERAL REGISTER, VOL. 52, NO. 130, PAGE 25698) HAS DESIGNATED CARBON ADSORPTION A "BEST AVAILABLE TECHNOLOGY" FOR THE REMOVAL OF SEVEN SPECIFIC VOCS FROM DRINKING WATER WHICH INCLUDES COMMON CHLORINATED SOLVENTS. THIS ASSUMES THAT VINYL CHLORIDE, METHYLENE CHLORIDE, AND ACETONE ARE NOT PRESENT AT THE PROPOSED SOUTH WALNUT CREEK BASIN SURFACE WATER COLLECTION LOCATIONS SINCE THESE COMPOUNDS ARE NOT READILY ADSORBED FROM SOLUTION USING ACTIVATED CARBON. THE SURFACE WATER QUALITY DATA PRESENTED IN APPENDIX B INDICATES THAT THESE COMPOUNDS WERE DETECTED AT LEVELS ABOVE ARARS ONLY AT STATIONS SW-56, SW-60 AND SW-101. IT IS PROPOSED, HOWEVER, THAT SURFACE WATER FROM THESE STATIONS BE COLLECTED AT THE DOWNSTREAM STATION SW-61 WHERE VINYL CHLORIDE, METHYLENE CHLORIDE AND ACETONE HAVE ALWAYS BEEN ESTIMATED BELOW DETECTION LIMITS AND/OR WERE ALSO PRESENT IN THE ASSOCIATED LABORATORY BLANKS. THE ABSENCE OF THESE VOCS AT SW-61 MAY BE DUE TO LABORATORY ARTIFACT (I.E., NOT ACTUALLY PRESENT AT THE UPSTREAM STATIONS), DILUTION, AND/OR VOLATILIZATION.

THE PROBABILITY OF EQUIPMENT FAILURE WILL BE MINIMIZED IN THIS SYSTEM BECAUSE OF THE REDUNDANCY OF HAVING STANDBY LEAD AND POLISHING ADSORPTION UNITS IN PARALLEL TO THE OPERATING UNITS, EACH OF WHICH COULD TREAT THE DESIGN FLOW. TWO ADDITIONAL STOCK UNITS ON SITE ADD TO THE SYSTEM RELIABILITY. APPROPRIATE SAFETY MEASURES REQUIRED WHEN MOVING AND INSTALLING LARGE EQUIPMENT WILL BE COMPLIED WITH DURING INSTALLATION. THE OPERATION AND MAINTENANCE OF THE SYSTEM WILL BE BY PERSONNEL WHO ARE TRAINED IN THE HANDLING OF HAZARDOUS AND RADIOACTIVE WASTES. WET ACTIVATED CARBON PREFERENTIALLY REMOVES OXYGEN FROM THE AIR. THEREFORE, ANY TIME PERSONNEL ARE WORKING IN CONFINED AREAS WHERE OXYGEN MAY BE DEPLETED, APPROPRIATE SAMPLING AND WORK PROCEDURES FOR POTENTIALLY LOW-OXYGEN SPACES WILL BE FOLLOWED, INCLUDING ALL APPLICABLE FEDERAL AND STATE REQUIREMENTS.

THE OPERATORS OF THE GAC SYSTEM WILL NOT BE EXPOSED TO VOC-LADEN CARBON BECAUSE THE USE OF THE CONTAINERIZED AND TRANSPORTABLE CARBON CONTACTORS ALLOWS REMOVAL AND REGENERATION/REPLACEMENT OF THE EXHAUSTED CARBON AT A REMOTE CARBON REACTIVATION SITE. CARBON WILL NOT BE HANDLED AT THE SITE. TRANSPORTING THE ENTIRE EXHAUSTED CARBON COLUMN TO THE REGENERATION FACILITY ENSURES OPERATORS ARE PROTECTED FROM THE CARBON, AND THE OPERATORS NEED ONLY FOLLOW ROUTINE SAFETY PROCEDURES WHICH ARE

APPROPRIATE TO HANDLING HEAVY EQUIPMENT.

THE EXHAUSTED CARBON IS GENERALLY REGENERATED THROUGH A THERMAL TREATMENT PROCESS WHICH STRIPS THE VOLATILE ORGANICS FROM THE CARBON. THE ORGANICS ARE SUBSEQUENTLY DESTROYED VIA INCINERATION. DURING THIS REGENERATION PROCESS, A SMALL QUANTITY OF ASH MAY BE GENERATED WHICH REQUIRES DISPOSAL AT A LANDFILL. THUS, THIS PROCESS CAN BE CONSIDERED AN ALTERNATIVE TO LAND DISPOSAL SINCE THE CARBON IS CONTINUOUSLY RECYCLED.

GAC ADSORPTION TREATMENT IN SEALED, FIXED-BED CONTACTOR VESSELS DOES NOT PRODUCE ANY WASTE STREAMS OR VAPOR EMISSIONS. THE SAFETY OF NEARBY COMMUNITIES SHOULD NOT BE ADVERSELY AFFECTED AND THE RISK OF HARM TO THE ENVIRONMENT SHOULD NOT BE INCREASED. THIS TREATMENT PROCESS WILL EFFECTIVELY REMOVE MANY OF THE TARGET ORGANIC CONTAMINANTS FROM THE SURFACE WATER. TREATED WATER WILL BE MONITORED AT THE EFFLUENT AND ALSO AT AN INTERMEDIATE POINT IN THE SYSTEM TO ENSURE CONTAMINANTS ARE BELOW THE ARAR CONCENTRATIONS BEFORE BEING RELEASED TO SOUTH WALNUT CREEK DURING IMPLEMENTATION OF THE PROCESS.

IMPLEMENTABILITY

GAC ADSORPTION IS A PROVEN TECHNOLOGY FOR REDUCING MANY VOCS FROM WATER. TESTING PERFORMED BY CALGON (ROCKWELL INTERNATIONAL, 1988B) DEMONSTRATED THAT ACTIVATED CARBON CAN REMOVE VOCS TO MEET ARARS. A SECOND CARBON UNIT CONNECTED IN SERIES WITH THE LEAD UNIT WOULD SERVE AS A POLISHING UNIT AND WILL ENSURE REMOVAL OF THE VOCS TO THESE LEVELS. THE REMOVAL OF SUSPENDED SOLIDS IN A PRETREATMENT STEP IS REQUIRED TO PREVENT FOULING OF THE CARBON. THE CARBON COLUMNS CAN BE EASILY SHIPPED AND READILY INSTALLED. THE SYSTEM SHOULD BE READY TO OPERATE AT FULL CAPACITY AFTER INITIAL ADJUSTMENTS AND TEST RUNS. CARBON SERVICES THAT PROVIDE RENTAL AND REGENERATION OF CARBON COLUMNS ARE COMMON AND OFFER AN ALTERNATIVE TO A CAPITAL PURCHASE. A HIGH DEGREE OF PUBLIC ACCEPTANCE IS ANTICIPATED FOR GAC ADSORPTION BASED ON ITS BDAT CLASSIFICATION, AND THE MINIMAL GENERATION OF TREATMENT RESIDUALS. THESE SERVICES ARE READILY AVAILABLE AND COST EFFECTIVE FOR AN INTERIM ACTION.

COSTS

IT IS ESTIMATED THAT THE CARBON USAGE RATE WILL BE 0.6 POUNDS PER 1,000 GALLONS OF SURFACE WATER, BASED ON BREAKTHROUGH OF 1,1-DCA. THIS ASSUMES THAT VINYL CHLORIDE, METHYLENE CHLORIDE, AND ACETONE ARE NOT PRESENT AT SW-61. BASED ON A MAXIMUM FLOW RATE OF 60 GPM, THE ANNUAL CONSUMPTION OF CARBON WILL BE APPROXIMATELY 20,000 POUNDS. THE COST OF A 20,000-POUNDS-PER-YEAR CARBON SERVICE IS $50,000. THIS INCLUDES THE RENTAL AND REGENERATION OF 10 CARBON COLUMNS, EACH CONTAINING 2,000 POUNDS OF ACTIVATED CARBON. THE COST OF ROUND-TRIP SHIPPING IS ESTIMATED AT $3,000 PER COLUMN. IT IS ASSUMED THAT THE EXHAUSTED CARBON COLUMNS WILL BE SHIPPED AS A MANIFESTED HAZARDOUS WASTE.

USING THE PRECEDING INFORMATION, THE ASSUMED CAPITAL COST FOR INSTALLING A CARBON ADSORPTION SYSTEM IS $70,600, AND THE ASSUMED ANNUAL OPERATING

COST IS $170,300 AS SHOWN IN TABLE 4-10. COSTS FOR PRETREATMENT OF THE INFLUENT FOR REMOVAL OF SUSPENDED SOLIDS ARE NOT CONSIDERED IN TABLE 4-10. TOTAL COST (PRESENT WORTH) OF THE GAC ADSORPTION SYSTEM BASED ON 10 PERCENT SIMPLE INTEREST, A 30-YEAR DURATION OF OPERATION, AND NO SALVAGE VALUE, IS ESTIMATED TO BE APPROXIMATELY $1,676,000.

4.4.3.2 ULTRAVIOLET (UV) PEROXIDE OXIDATION

DESCRIPTION

THE UV/PEROXIDE TREATMENT UNIT, AS DESIGNED BY ONE MANUFACTURER, CONSISTS OF AN 360-GALLON, STAINLESS-STEEL OXIDATION CHAMBER WHICH PROVIDES FOR A SURFACE WATER RETENTION TIME RANGE OF 4 TO 8 MINUTES AT A PEAK SYSTEM FLOWRATE OF 60 GPM (FIGURE 4-9).

THE OXIDATION CHAMBER CONTAINS UV RADIATION LAMPS WHICH ARE MOUNTED HORIZONTALLY IN QUARTZ SHEATHS. A HYDROGEN PEROXIDE FEED SYSTEM IS USED TO INJECT APPROXIMATELY 50 MG/L (PER PPM OF ORGANIC CONTAMINANTS) OF A 50 PERCENT H2O2 SOLUTION INTO THE SURFACE WATER FEED LINE. THE SURFACE WATER/PEROXIDE MIXTURE THEN PASSES THROUGH AN IN-LINE STATIC MIXER BEFORE ENTERING THE BOTTOM OF THE OXIDATION CHAMBER. THE WATER THEN FLOWS THROUGH THE REACTION CHAMBER, PASSING THE UV LAMPS, BEFORE IT EXITS THE TOP OF THE OXIDATION CHAMBER.

EFFECTIVENESS

THE UV/PEROXIDE SYSTEM IS CAPABLE OF REMOVING VOCS FROM THE SURFACE WATER TO LEVELS BELOW THE ARARS. A TECHNOLOGY EVALUATION OF A DEMONSTRATION UNIT WAS CONDUCTED BY THE EPA'S RISK REDUCTION LABORATORY IN CINCINNATI, OHIO (EPA, 1990A). GROUNDWATER TREATMENT EXPERIMENTS WERE PERFORMED IN WHICH RESIDENCE TIME, OZONE AND HYDROGEN PEROXIDE DOSAGES, RADIATION INTENSITY AND INFLUENT PH WERE ALTERED TO EVALUATE THE TECHNOLOGY. THE DEMONSTRATION UNIT ACHIEVED VOC REMOVALS GREATER THAN 90 PERCENT. THESE RESULTS INDICATE THAT THE UV/PEROXIDE TREATMENT PROCESS IS LIKELY CAPABLE OF ACHIEVING THE EFFLUENT CRITERIA FOR ALL OF THE VOLATILE ORGANICS LISTED IN TABLE 4-1. HOWEVER, THE VOLATILE ORGANICS MAY NOT BE COMPLETELY OXIDIZED TO CARBON DIOXIDE, WATER, AND CHLORIDE, AND UNINTENDED ORGANIC DEGRADATION PRODUCTS MAY BE PRODUCED.

THE SYSTEM REQUIRES PERIODIC UV LAMP REPLACEMENT AND ROUTINE MAINTENANCE, AND WITH SUCH MAINTENANCE, THE UNIT EXPECTED TO HAVE LONG-TERM RELIABILITY. THE RISK OF FAILURE OF THE SYSTEM AT ANY TIME IS HIGHLY UNLIKELY. HOWEVER, BECAUSE SURFACE WATER IS EXPECTED TO HAVE WIDELY VARYING CONCENTRATIONS OF ORGANICS,IT WILL BE DIFFICULT TO ENSURE ADEQUATE PEROXIDE DOSAGE FOR COMPLETE ORGANIC DESTRUCTION AND TO PREVENT THE APPEARANCE OF EXCESS PEROXIDE IN THE EFFLUENT. WHILE THE PRESENCE OF FERROUS IRON AND MANGANESE CAN IMPEDE THE EFFECTIVENESS OF THE UV/PEROXIDE TREATMENT SYSTEM DUE TO THE PRECIPITATION OF THESE METALS, A

MANUFACTURER HAS INDICATED THAT THIS WILL NOT BE A PROBLEM AT THE IRON AND MANGANESE CONCENTRATIONS EXPECTED. HOWEVER, SHOULD PRECIPITATION PROBLEMS ARISE, APPROPRIATE PRE-TREATMENT AND POST-TREATMENT WILL BE IMPLEMENTED TO CORRECT THIS PROBLEM.

THE UV/PEROXIDE OXIDATION SYSTEM WILL DESTROY VOCS PRESENT IN CONTAMINATED SOUTH WALNUT CREEK BASIN SURFACE WATER AND THUS REPRESENTS AN ALTERNATIVE TO LAND DISPOSAL. THE SYSTEM ITSELF WILL NOT PRODUCE TREATMENT RESIDUALS. SOME SUPPORT UNIT OPERATIONS (I.E., PRE-TREATMENT)

FOR THE UV/PEROXIDE OXIDATION SYSTEM, HOWEVER, MAY REQUIRE RESIDUAL WASTE MANAGEMENT.

DURING OPERATION OF THE UV/PEROXIDE OXIDATION TREATMENT UNIT, THE USE OF HYDROGEN PEROXIDE, A STRONG OXIDIZER, WILL REQUIRE THAT OPERATORS BE AWARE OF THIS POTENTIAL HAZARD. THE H2O2 BULK STORAGE TANK WILL BE PROPERLY VENTED TO ASSURE NO PRESSURE BUILDUP AND MINIMIZE HANDLING EXPOSURE. EXISTING DOE AND EG&G HEALTH AND SAFETY GUIDELINES AT THE RFP AND PROJECT-SPECIFIC SOPS REGARDING OPERATOR SAFETY WHILE WORKING WITH STRONG OXIDIZERS WILL BE FOLLOWED. UV LAMPS OPERATE UTILIZING HIGH VOLTAGE, AND THUS CAUTION MUST BE USED WHEN WORKING WITH THE SYSTEM AND DURING THE PERIODIC REPLACEMENT OF THE UV LAMPS.

THE SAFETY OF NEARBY COMMUNITIES SHOULD NOT BE ADVERSELY AFFECTED, AND THE RISK OF HARM TO THE ENVIRONMENT SHOULD NOT BE INCREASED AS THIS TREATMENT PROCESS WILL EFFECTIVELY DESTROY THE CONTAMINANTS. TREATED WATER WILL BE MONITORED TO ENSURE CONTAMINANTS ARE WITHIN REGULATORY GUIDELINES BEFORE BEING RELEASED TO THE ENVIRONMENT.

IMPLEMENTABILITY

UV/PEROXIDE OXIDATION IS A TECHNOLOGY FOR THE COMPLETE DESTRUCTION AND DETOXIFICATION OF HAZARDOUS ORGANIC COMPOUNDS IN AQUEOUS SOLUTIONS. ALTHOUGH THE TECHNOLOGY IS RELATIVELY NEW AND HAS HAD LIMITED APPLICATION IN THE FIELD, SARA REQUIRES EPA TO PREFER REMEDIAL ACTIONS THAT SIGNIFICANTLY AND PERMANENTLY REDUCE THE TOXICITY, MOBILITY, OR VOLUME OF HAZARDOUS WASTES BY EMPLOYING INNOVATIVE TECHNOLOGIES THAT RESULT IN THE DESTRUCTION OR DETOXIFICATION OF THE WASTES. THE EQUIPMENT NECESSARY TO CONSTRUCT A UV PEROXIDE SYSTEM IS NOT "OFF-THE-SHELF", BUT MUST BE DESIGNED FOR EACH INDIVIDUAL APPLICATION. THE EQUIPMENT COMPONENTS AND MATERIALS NECESSARY TO CONSTRUCT A SYSTEM ARE READILY AVAILABLE, HOWEVER.

DEMONSTRATED PERFORMANCE OF THE UV/PEROXIDE GROUNDWATER TREATMENT SYSTEM HAS BEEN SOMEWHAT LIMITED DUE TO THE RELATIVELY NEW DEVELOPMENT OF THE PROCESS. HOWEVER, THERE ARE SIX UV/PEROXIDE UNITS CURRENTLY OPERATIONAL OR ON-LINE AND READY FOR OPERATION. ONE OF THESE UNITS IS LOCATED AT ROCKETDYNE'S SANTA SUSANA FACILITY IN SOUTHERN CALIFORNIA. PILOT-SCALE OPERATIONS WERE PERFORMED ON GROUND WATER CONTAINING VOCS (TCA, TCE, ETC.) AT SYSTEM FLOW RATES OF APPROXIMATELY 20 TO 40 GPM. RESULTS FROM THE PILOT SCALE TESTING WERE FAVORABLE, AND A UV/PEROXIDE GROUNDWATER

TREATMENT UNIT HAS BEEN PURCHASED, SET UP, AND SITE TESTED. ANOTHER UV/PEROXIDE GROUNDWATER TREATMENT SYSTEM, LOCATED LOCALLY, WAS VISITED AND APPEARED TO BE A LOW-MAINTENANCE, HIGHLY EFFECTIVE GROUNDWATER TREATMENT UNIT. THIS SYSTEM WAS TREATING GROUND WATER WITH TCA CONCENTRATIONS SIGNIFICANTLY LOWER THAN THOSE FOUND AT THE 881 HILLSIDE (APPROXIMATELY 7 PPB). HOWEVER, THE SAME UV TREATMENT PROCESS HAD INITIALLY AND EFFECTIVELY TREATED GROUND WATER WITH MUCH HIGHER CONCENTRATIONS.

OPERATING AND MAINTENANCE REQUIREMENTS FOR THE UV/PEROXIDE TREATMENT SYSTEM ARE RELATIVELY MINOR. THE SYSTEM WILL REQUIRE UP TO 500 KW OF POWER, A HIGH ELECTRICAL POWER CONSUMPTION REQUIREMENT RELATIVE TO OTHER TREATMENT PROCESSES, AND 12,200 POUNDS/YEAR OF 50 PERCENT H2O2 SOLUTION FOR NORMAL OPERATION. ROUTINE MAINTENANCE OF THE EQUIPMENT IS REQUIRED AND THE UV LAMPS WILL REQUIRE REPLACEMENT APPROXIMATELY EVERY SIX MONTHS. ALL FOUR SYSTEM UV LAMPS CAN BE EXCHANGED IN ABOUT AN HOUR.

INFLUENT PRETREATMENT FOR SUSPENDED SOLIDS REMOVAL IS REQUIRED TO PREVENT FOULING OF THE OXIDATION CHAMBER. ALSO, INFLUENT PRE- AND POST-TREATMENT FOR REMOVAL OF IRON AND MANGANESE MAY BE NECESSARY AS DISCUSSED ABOVE. THE SYSTEM WILL REQUIRE CAREFUL OBSERVATION TO ENSURE THE SYSTEM IS OPERATING PROPERLY, ALTHOUGH SYSTEM ALARMS WILL NOTIFY OPERATORS IF A PROBLEM DOES OCCUR.

PUBLIC ACCEPTANCE OF UV/PEROXIDE OXIDATION SHOULD BE FAVORABLE BASED ON REMOVAL EFFICIENCIES OBSERVED TO DATE. THE ATTRIBUTE OF MINERALIZING VOCS PRESENT IN SURFACE WATER (I.E., CONVERTING THEM TO CARBON DIOXIDE AND WATER) SHOULD ALSO RECEIVE A FAVORABLE RESPONSE. TREATABILITY TESTING ON CONTAMINATED SOUTH WALNUT CREEK BASIN SURFACE WATER MAY BE NECESSARY TO WIN PUBLIC APPROVAL SINCE IT IS STILL A RELATIVELY NEW TECHNOLOGY.

COSTS

ASSUMED COSTS FOR THE UV/PEROXIDE GROUNDWATER TREATMENT UNIT ARE SHOWN IN TABLE 4-11. COSTS FOR PRE- AND POST-TREATMENT OF THE INFLUENT FOR REASONS DISCUSSED ABOVE ARE NOT CONSIDERED IN TABLE 4-11. THE CAPITAL COST FOR THE UV/PEROXIDE SURFACE WATER TREATMENT SYSTEM IS APPROXIMATELY $672,800. OPERATIONAL COSTS ARE $214,600 PER YEAR AND INCLUDE PROCUREMENT OF HYDROGEN PEROXIDE, POWER UTILIZATION, LABOR, AND LAMP REPLACEMENT. OPERATIONAL COSTS ARE BASED ON A SYSTEM FLOW RATE OF 60 GPM, 24 HOURS PER DAY. ASSUMING A 10 PERCENT INTEREST RATE AND A 30 YEAR OPERATING LIFE, THE PRESENT WORTH OF THE SYSTEM IS $2,695,500.

4.4.3.3 AIR STRIPPING WITH OFF-GAS TREATMENT

DESCRIPTION

DURING AIR STRIPPING, VOCS ARE TRANSFERRED FROM THE WATER TO A CONTINUOUSLY FLOWING AIRSTREAM WHICH IS IN DIRECT CONTACT WITH THE WATER (FIGURE 4-10). INFLUENT CONTAMINATED SURFACE WATER WILL ENTER THE TOP

OF A 32-INCH DIAMETER, 34-FOOT AIR STRIPPING COLUMN AND SUBSEQUENTLY CONTACT CLEAN AIR SUPPLIED THROUGH THE BOTTOM OF THE COLUMN (COLUMN SIZES ARE APPROXIMATE). APPROPRIATE AIR-TO-WATER FLOW RATES WILL BE UTILIZED TO PROVIDE FOR THE OPTIMUM (99 PERCENT) TRANSFER OF THE CONTAMINANTS FROM THE SURFACE WATER TO THE AIR STREAM. THE TREATED SURFACE WATER WILL THEN BE PUMPED THROUGH A 2000-POUND LIQUID PHASE CARBON TREATMENT POLISHING UNIT (IDENTICAL TO THE ONE DESCRIBED IN SECTION 4.4.3.1). THE AIR STRIPPER EMISSIONS WILL BE HEATED ABOVE DEW POINT AND THEN PASSED THROUGH A VAPOR PHASE CARBON SYSTEM TO REMOVE THE ORGANICS BEFORE BEING RELEASED TO THE ENVIRONMENT. THE VAPOR PHASE CARBON UNIT WILL CONTAIN 2,000 POUNDS OF CARBON.

EFFECTIVENESS

THE USE OF AN AIR STRIPPER IS A HIGHLY EFFECTIVE METHOD OF REMOVING HAZARDOUS VOCS FROM WATER. THE EFFICIENCY OF THE PROCESS IS WELL DOCUMENTED. THE ENVIRONMENTAL PROTECTION AGENCY (FEDERAL REGISTER, VOL. 52, NO. 130, PAGE 25698) HAS DESIGNATED PACKED TOWER AERATION ALONG WITH GRANULAR ACTIVATED CARBON, AS A BDAT FOR THE REMOVAL OF VOCS FROM DRINKING WATER.

AN AIR STRIPPER COUPLED WITH LIQUID- AND VAPOR-PHASE CARBON ADSORPTION IS A PROVEN SYSTEM THAT HAS A DEPENDABLE RECORD OF USE. IT IS EXPECTED

THAT THIS TREATMENT PROCESS, WITH PROPER MAINTENANCE, WILL PROVIDE THE DESIRED LEVEL OF CONTAMINANT REMOVAL TO MEET THE ARARS.

THE SYSTEM IS SIZED FOR THE INTENDED MAXIMUM FLOW OF 60 GPM AND INCLUDES TWO VAPOR-PHASE CARBON UNITS -- ONE INSTALLED AND ONE STOCK. THE ON-SITE STOCK UNIT ADDS TO SYSTEM RELIABILITY. ALL APPROPRIATE SAFETY MEASURES REQUIRED WHEN MOVING AND INSTALLING LARGE EQUIPMENT WILL BE COMPLIED WITH DURING INSTALLATION. THE OPERATION AND MAINTENANCE OF THE SYSTEM WILL BE PERFORMED BY PERSONNEL PROPERLY TRAINED IN THE HANDLING OF HAZARDOUS AND RADIOACTIVE WASTES. WET ACTIVATED CARBON PREFERENTIALLY REMOVES OXYGEN FROM THE AIR. THEREFORE, ANY TIME PERSONNEL ARE WORKING IN CONFINED AREAS WHERE OXYGEN MAY BE DEPLETED, APPROPRIATE SAMPLING AND WORK PROCEDURES FOR POTENTIALLY LOW-OXYGEN SPACES WILL BE FOLLOWED, INCLUDING ALL APPLICABLE FEDERAL AND STATE REQUIREMENTS.

THE OPERATORS OF THE SYSTEM WILL NOT BE EXPOSED TO VOC-LADEN CARBON FROM THE VAPOR-PHASE OR LIQUID-PHASE CARBON UNITS BECAUSE THE USE OF CONTAINERIZED AND TRANSPORTABLE CARBON CONTACTORS ALLOWS REMOVAL AND REGENERATION/REPLACEMENT OF THE EXHAUSTED CARBON AT A REMOTE CARBON REACTIVATION SITE. CARBON WILL NOT BE HANDLED AT THE SITE. TRANSPORTING THE ENTIRE EXHAUSTED CARBON COLUMN ITSELF TO THE REGENERATION FACILITY ENSURES OPERATORS ARE PROTECTED FROM THE CARBON ITSELF AND NEED ONLY FOLLOW ROUTINE SAFETY PROCEDURES WHEN HANDLING HEAVY EQUIPMENT.

THE EXHAUSTED CARBON IS GENERALLY REGENERATED THROUGH A THERMAL

TREATMENT PROCESS WHICH STRIPS THE VOCS FROM THE CARBON. THE ORGANICS ARE SUBSEQUENTLY DESTROYED VIA INCINERATION. DURING THIS REGENERATION PROCESS, A SMALL QUANTITY OF ASH MAY BE GENERATED WHICH REQUIRES DISPOSAL AT A LANDFILL. THUS, THIS PROCESS CAN BE CONSIDERED AN ALTERNATIVE TO LAND DISPOSAL SINCE THE CARBON IS CONTINUOUSLY RECYCLED. HOWEVER, IF THE SPENT LIQUID-PHASE CARBON IS DETERMINED TO BE A MIXED WASTE, THEN IT WOULD REQUIRE LAND DISPOSAL AT A FACILITY PERMITTED TO ACCEPT MIXED WASTES. THE VAPOR-PHASE CARBON ADSORPTION SYSTEM WILL REMOVE THE ORGANICS FROM THE AIR STRIPPER EMISSIONS BEFORE BEING RELEASED TO THE ENVIRONMENT. THEREFORE, THE VAPOR-PHASE CARBON ADSORPTION SYSTEM WILL ELIMINATE THE IMPACT OF ANY AIR STRIPPER EMISSIONS ON THE PUBLIC HEALTH. THE SAFETY OF NEARBY COMMUNITIES SHOULD NOT BE ADVERSELY AFFECTED AND THE RISK OF HARM TO THE ENVIRONMENT SHOULD NOT BE INCREASED. TREATED WATER AND AIR WILL BE MONITORED TO ENSURE THAT CONTAMINANT LEVELS ARE BELOW ARARS.

IMPLEMENTABILITY

THE AIR STRIPPER WILL REMOVE GREATER THAN 99 PERCENT OF THE CONTAMINANTS IN THE SURFACE WATER. BECAUSE THE AIR STRIPPER PERFORMANCE IS SENSITIVE TO CHANGES IN FLOW AND CONTAMINANT CONCENTRATIONS, A LIQUID-PHASE CARBON ADSORPTION UNIT IS IN SERIES WITH THE AIR STRIPPER TO ENHANCE SYSTEM PERFORMANCE AND TO ENSURE THAT THE TREATED EFFLUENT MEETS ARARS FOR VOCS. BASED ON A FLOW RATE OF 60 GPM, 24 HOURS PER DAY, LIQUID PHASE CARBON USAGE WILL BE APPROXIMATELY 11 POUNDS/DAY, AND EACH 2000-POUND CARBON UNIT WILL REQUIRE REPLACEMENT APPROXIMATELY EVERY SIX MONTHS. VAPOR PHASE CARBON USAGE WILL BE APPROXIMATELY 10 POUNDS/DAY, AND EACH 2000-POUND CARBON UNIT WILL REQUIRE REPLACEMENT APPROXIMATELY EVERY SIX MONTHS.

OPERATION OF THE TREATMENT PROCESS IS RELATIVELY SIMPLE, REQUIRING OCCASIONAL CLEANING OF THE AIR STRIPPING COLUMN AND REPLACEMENT OF CARBON. THE AIR STRIPPER WILL REQUIRE CLEANING TO REMOVE SCALE BUILDUP ON THE PACKING MATERIAL IN ORDER TO MAINTAIN OPTIMUM REMOVAL EFFICIENCY. EFFLUENT FROM THE CLEANING OPERATION WILL REQUIRE TREATMENT IN THE BUILDING 374 PROCESS WASTE TREATMENT SYSTEM. THE REMOVAL OF SUSPENDED SOLIDS IN A PRETREATMENT STEP IS REQUIRED TO PREVENT FOULING OF THE CARBON AND LIQUID PHASE ADSORBER. TRANSPORTATION AND REGENERATION OF THE LIQUID-PHASE AND VAPOR-PHASE CARBON UNITS AT A REMOTE CARBON REACTIVATION SITE WILL BE REQUIRED. THE AIR STRIPPING WITH OFF-GAS TREATMENT SYSTEM FOR REMEDIATING VOC-CONTAMINATED SURFACE WATER IS AVAILABLE COMMERCIALLY AND COULD BE IMPLEMENTED QUICKLY. NO DIFFICULTIES ARE ANTICIPATED DURING THE INSTALLATION AND STARTUP OF THIS TREATMENT SYSTEM.

AIR STRIPPING WITH LIQUID AND VAPOR-PHASE GAC ADSORPTION SHOULD RECEIVE A HIGH DEGREE OF PUBLIC ACCEPTANCE DUE TO ITS PROVEN TRACK RECORD AND CLASSIFICATION AS A BDAT.

COSTS

ASSUMED COSTS FOR THE AIR STRIPPING GROUNDWATER TREATMENT SYSTEM ARE SHOWN IN TABLE 4-12. COSTS FOR PRETREATMENT OF THE INFLUENT FOR REMOVAL OF SUSPENDED SOLIDS ARE NOT CONSIDERED IN TABLE 4-12. THE TOTAL CAPITAL COST FOR THE SYSTEM IS $114,800. OPERATIONAL COSTS ARE APPROXIMATELY $139,900 AND INCLUDE THE COST OF CARBON COLUMN RENTAL AND REGENERATION, AND CARBON COLUMN SHIPMENTS TO AND FROM THE VENDOR. THE CARBON COLUMN RENTAL AND REGENERATION SERVICE DESCRIBED IN SECTION 4.4.3.1 WILL BE USED FOR BOTH THE LIQUID- AND VAPOR-PHASE UNITS. IT SHOULD BE NOTED THAT THE COST OF THE CARBON SERVICE IS BASED ON REGENERATION OF THE CARBON AS A HAZARDOUS WASTE. ASSUMING A 10 PERCENT INTEREST RATE, A 30 YEAR OPERATING LIFE, AND NO SALVAGE VALUE, THE PRESENT WORTH OF THE SYSTEM IS $1,433,600.

THE TOTAL PRESENT WORTH COST OF THE SYSTEM BASED ON 10 PERCENT SIMPLE INTEREST, A 30-YEAR PERIOD OF OPERATION, AND NO SALVAGE IS ESTIMATED TO BE APPROXIMATELY $1,421,400. THESE COSTS DO NOT INCLUDE ANY CAPITAL OR OPERATING COSTS FOR THE BUILDING 374 PROCESS WASTE TREATMENT SYSTEM ASSOCIATED WITH THE TREATMENT OF THE AIR STRIPPER CLEANING EFFLUENT.

5.1 INTRODUCTION

THIS SECTION SUMMARIZES THE EVALUATED SURFACE WATER COLLECTION AND TREATMENT TECHNOLOGIES, AND PRESENTS A TABULAR COMPARISON OF THE EVALUATION RESULTS (TABLE 5-1). A RECOMMENDATION IS MADE FOR A PREFERRED SURFACE WATER IM/IRA USING THE COMPARATIVE ANALYSIS.

5.2 COMPARISON OF TECHNOLOGIES

COLLECTION OF SURFACE WATER BY DIVERSION AT THE SOURCES WAS ESTABLISHED IN SECTION 4 AS THE ONLY REASONABLE ALTERNATIVE FOR COLLECTION OF CONTAMINATED SOUTH WALNUT CREEK BASIN SURFACE WATERS IN OU 2 AND IS, THEREFORE, THE PREFERRED COLLECTION TECHNIQUE FOR THE IM/IRA. ON THE OTHER HAND, SEVERAL TECHNOLOGIES FOR SURFACE WATER TREATMENT WERE CONSIDERED. THESE TECHNOLOGIES INCLUDE CHEMICAL TREATMENT/CROSS-FLOW MEMBRANE FILTRATION ("CROSS-FLOW MEMBRANE FILTRATION" IS USED FOR BREVITY) AND GRANULAR MEDIA FILTRATION WITH POLYMER ADDITION FOR

SUSPENDED SOLIDS REMOVAL; CROSS-FLOW MEMBRANE FILTRATION AND ION EXCHANGE FOR RADIONUCLIDE AND METALS REMOVAL; AND GAC, UV/PEROXIDE OXIDATION AND AIR STRIPPING WITH LIQUID- AND VAPOR-PHASE GAC FOR VOC REMOVAL.

THE CROSS-FLOW MEMBRANE FILTRATION TECHNOLOGY IS THE PREFERRED METHOD FOR REMOVAL OF RADIONUCLIDES AND METALS BECAUSE IT IS THE MOST LIKELY TREATMENT TECHNOLOGY THAT WILL REMOVE THESE CONSTITUENTS FROM THE SOUTH WALNUT CREEK BASIN SURFACE WATER AND GENERATE AN EFFLUENT THAT IS PROTECTIVE OF PUBLIC HEALTH AND THE ENVIRONMENT. THIS IS A RESULT OF ADSORPTION OF RADIONUCLIDES AND METALS ON A FERRIC HYDROXIDE FLOC AS DESCRIBED IN SECTION 4.4.2. IT IS NOTED THAT CROSS-FLOW MEMBRANE FILTRATION AND GRANULAR MEDIA FILTRATION WITH POLYMER ADDITION ARE BOTH

EFFECTIVE TECHNOLOGIES FOR REMOVAL OF SUSPENDED SOLIDS. HOWEVER, BECAUSE CROSS-FLOW MEMBRANE FILTRATION IS THE PREFERRED TECHNOLOGY FOR RADIONUCLIDE AND METAL REMOVAL, ADDITIONAL SURFACE WATER TABLE 5-1 COMPARATIVE ANALYSIS OF TECHNOLOGIES PRETREATMENT FOR SUSPENDED SOLIDS REMOVAL IS NOT REQUIRED. GRANULAR MEDIA FILTRATION WITH POLYMER ADDITION IS THUS ELIMINATED FROM CONSIDERATION IN THE IM/IRA. AT THIS TIME, ION EXCHANGE CANNOT BE CONSIDERED A RELIABLE TECHNOLOGY FOR THE REMOVAL OF PLUTONIUM AND AMERICIUM BECAUSE THERE IS NO SUPPORTING DATA ON ITS REMOVAL EFFICIENCY. MOREOVER, PLUTONIUM AND AMERICIUM WILL LIKELY BE COLLOIDAL IN NATURE AND LESS APT TO READILY EXCHANGE WITH IONS ON THE RESIN SURFACE. THE CROSS-FLOW MEMBRANE FILTRATION SYSTEM IS ALSO RELIABLE, READILY PROCURABLE, AND EASILY INSTALLED.

GAC IS THE TREATMENT TECHNOLOGY OF CHOICE FOR REMOVAL OF VOCS. GAC IS A PROVEN TECHNOLOGY THAT IS RELIABLE, EASY TO OPERATE, AND THE MOST COST EFFECTIVE OF THE THREE TECHNOLOGIES EXAMINED. THIS TECHNOLOGY IS NOT SUITABLE FOR REMOVAL OF VINYL CHLORIDE, METHYLENE CHLORIDE, OR ACETONE. HOWEVER, AS DISCUSSED IN SECTION 4, THESE CONSTITUENTS ARE NOT EXPECTED, IN THE INFLUENT TO THE TREATMENT SYSTEM, ABOVE THEIR RESPECTIVE ARAR LEVELS. IN THE EVENT THAT THE FIELD-SCALE TREATABILITY STUDY INDICATES THAT VINYL CHLORIDE, METHYLENE CHLORIDE OR ACETONE ARE PRESENT AT CONCENTRATION LEVELS NOT APPROPRIATE FOR LIQUID-PHASE GAC ADSORPTION, MODIFICATIONS TO OR REPLACEMENT OF THE LIQUID-PHASE GAC SYSTEM WILL BE CONSIDERED AT THAT TIME. ALTHOUGH UV/PEROXIDE CAN OXIDIZE ALL OF THESE CONTAMINANTS, EFFECTIVE OPERATION IS LIKELY TO BE DIFFICULT WITH CHANGING ORGANIC LOADINGS FROM A SURFACE WATER SYSTEM (I.E., PROCESS CONTROL). IN ADDITION, UV/PEROXIDE IS SUBSTANTIALLY MORE COSTLY TO INSTALL AND OPERATE THAN THE OTHER ORGANIC REMOVAL TECHNOLOGIES. AIR STRIPPING IS A VIABLE VOC TREATMENT TECHNOLOGY FOR THE SOUTH WALNUT CREEK BASIN SURFACE WATER IM/IRA. THIS PROCESS, HOWEVER, IS MUCH MORE COMPLEX BY DESIGN THAN LIQUID-PHASE GAC, WHICH MAKES IT MORE DIFFICULT TO OPERATE AND HAS A HIGHER PROBABILITY OF SYSTEM DOWNTIME. FINALLY, THE COST OF AIR STRIPPING WITH LIQUID AND VAPOR-PHASE ADSORPTION IS ROUGHLY EQUAL TO THAT FOR LIQUID-PHASE GAC.

RADIONUCLIDES AND METALS WILL BE REMOVED UPSTREAM OF THE GAC UNIT. THE GAC SHOULD, THEREFORE, NOT BECOME A MIXED WASTE AND WILL BE SUITABLE FOR REGENERATION AT ANY FACILITY THAT ACCEPTS SPENT CARBON FOR REGENERATION. THIS WILL PROVIDE FOR THE ULTIMATE DESTRUCTION OF THE CONTAMINANTS CONSISTENT WITH GUIDANCE IN THE NCP, WHICH REQUIRES CONSIDERATION OF REMEDIAL ALTERNATIVES THAT INCLUDE AN ALTERNATIVE THAT REMOVES OR DESTROYS HAZARDOUS SUBSTANCES.

6.1 SUMMARY

THE PREFERRED SOUTH WALNUT CREEK BASIN SURFACE WATER IM/IRA CONSISTS OF THE FOLLOWING COMPONENTS:

1. SURFACE WATER COLLECTION BY DIVERSION AT THE SOURCES; AND

2. TREATMENT OF SURFACE WATER BY CHEMICAL TREATMENT/CROSS-FLOW MEMBRANE FILTRATION ("CROSS-FLOW MEMBRANE FILTRATION" IS USED FOR BREVITY) FOLLOWED BY LIQUID-PHASE GAC TREATMENT.

6.1.1 SURFACE WATER COLLECTION

FIGURE 4-3 SHOWS THE LOCATIONS OF THE SURFACE WATER DIVERSION AND COLLECTION SYSTEMS PROPOSED IN THIS ALTERNATIVE. THE COLLECTION SYSTEMS ARE DENOTED CS-59, CS-61, AND CS-132. COLLECTED SURFACE WATER IS AUTOMATICALLY TRANSFERRED TO THE TREATMENT SYSTEM BY PIPELINE.

FLOWS AT STATIONS SW-56, SW-60, SW-101, AND SW-133 WILL BE COLLECTED AT THE DOWNSTEAM STATION SW-61 BY A NEW SURFACE WATER DIVERSION WEIR AND PUMP STATION. THE WEIR WILL SERVE TO DIVERT UP TO 37.5 GPM (14 GPM AVERAGE ANNUAL WITHDRAWAL RATE) FROM THE DRAINAGE. CONTAMINATED SURFACE WATER WILL BE DIVERTED UPSTREAM OF THE WEIR INTO A 1,000-GALLON PRECAST CONCRETE SUMP PROVIDED WITH A SCREEN, WHERE LARGE DEBRIS IS SEPARATED FROM THE FLOW. THIS SCREEN WILL REQUIRE MANUAL CLEANING TO REMOVE DEBRIS. WATER WILL BE PUMPED FROM THE MANHOLE TO THE TREATMENT FACILITY. WHEN THE INFLOW INTO THE SUMP EXCEEDS THE PUMPING RATE, THE EXCESS FLOW WILL RETURN THROUGH OVERFLOW PIPING TO THE DRAINAGE BELOW THE WEIR.

THE SEEP FLOW FROM SW-59 WILL BE ISOLATED FROM THE SOUTH WALNUT CREEK DRAINAGE AND COLLECTED SEPARATELY FROM CS-61 USING A 500-GALLON, PRECAST CONCRETE SUMP. THE SUMP AND INSTALLED PUMP WILL BE DESIGNED TO COLLECT AND TRANSFER THE DESIGN FLOW OF 4.5 GPM (1 GPM AVERAGE ANNUAL WITHDRAWAL RATE). FLOWS IN EXCESS OF 4.5 GPM WILL BE DISCHARGED TO SOUTH WALNUT CREEK, VIA AN OVERFLOW PIPE, TO THE DRAINAGE. THE OVERFLOW WILL ENTER SOUTH WALNUT CREEK UPGRADIENT OF CS-61 AND WILL EITHER BE COLLECTED BY OR ALLOWED TO PASS CS-61, DEPENDING ON WHETHER THE CREEK FLOW IS LESS THAN OR GREATER THAN THE 37.5 GPM DESIGN FLOW FOR CS-61. UPPER SOUTH WALNUT CREEK FLOW WILL BE COLLECTED AT SW-132 BY A NEW SURFACE WATER DIVERSION WEIR AND PUMP STATION. THE WEIR WILL SERVE TO DIVERT UP TO 18 GPM (5 GPM AVERAGE ANNUAL WITHDRAWAL RATE) FROM THE DRAINAGE. CONTAMINATED WATER WILL BE DIVERTED INTO A 1000-GALLON PRECAST CONCRETE SUMP. FLOW IN EXCESS OF THE DESIGN FLOW (18 GPM) WILL BE PERMITTED TO OVERFLOW THE DIVERSION WEIR.

THE DESIGN FLOW AND ANNUAL AVERAGE WITHDRAWAL RATES FOR THE SOUTH WALNUT CREEK DRAINAGE (I.E., CS-59, CS-61, AND CS-132) ARE 60 GPM AND 20 GPM, RESPECTIVELY. IT IS PROPOSED THAT ALL SURFACE WATERS COLLECTED AND TREATED IN THIS IM/IRA WILL BE DISCHARGED TO SOUTH WALNUT CREEK, JUST DOWNGRADIENT OF CS-132.

6.1.2 SURFACE WATER TREATMENT

THE SURFACE WATER COLLECTED WILL BE TREATED USING CROSS-FLOW MEMBRANE FILTRATION (FOR SUSPENDED SOLIDS AND RADIONUCLIDE REMOVAL), FOLLOWED BY LIQUID-PHASE ACTIVATED CARBON (FOR ORGANICS REMOVAL) (FIGURE 6-1). THE

RESPECTIVE UNITS AND APPURTENANCES WILL BE HOUSED IN THREE 48-FOOT TRAILERS TO PROTECT WEATHER- OR TEMPERATURE-SENSITIVE COMPONENTS. FIRE PROTECTION WITHIN THE TRAILERS WILL BE PROVIDED BY TWO WALL-MOUNTED, 25-POUND, DRY CHEMICAL-TYPE FIRE EXTINGUISHERS. THE TRAILERS AND ALL TREATMENT UNITS ARE CONSTRUCTED OF NON-COMBUSTIBLES. OTHER THAN MINIMAL FILES AND RECORDS, NO COMBUSTIBLE MATERIALS WILL BE MAINTAINED WITHIN THE TRAILERS. EXTERNAL WATER PIPES WILL BE ABOVE GROUND AND HEAT TRACED TO PROTECT AGAINST FREEZING. ALL TANKS, PIPING AND SUMPS WILL BE EQUIPPED WITH SECONDARY CONTAINMENT TO COMPLY WITH 6 CCR 1007-3 AND 40 CFR 264.193.

MAJOR COMPONENTS OF THE TREATMENT SYSTEM INCLUDE:

EXTERIOR TO THE TRAILERS

* (1) 10,000-GALLON EQUALIZATION TANK
* PIPING
* ASSOCIATED PUMPS, GAGES, AND VALVES

INTERIOR TO TRAILER 1

* MAIN CHEMICAL REACTION SYSTEM
* SOLIDS DEWATERING SYSTEM

INTERIOR TO TRAILER 2

* FILTRATION SYSTEM
* PROCESS INSTRUMENTATION SYSTEM
* NEUTRALIZATION SYSTEM

INTERIOR TO TRAILER 3

* (2) 60-INCH CARBON UNITS
* (2) 60-INCH STANDBY CARBON UNITS
* ASSOCIATED PLASTIC (PVC) PIPING AND VALVES

AS THE FLOWS FROM THE DIFFERENT SOURCES ARE EXPECTED TO VARY, THE EQUALIZATION TANK WILL ENSURE A SOMEWHAT CONSTANT FLOW AND LOADING THROUGH THE TREATMENT SYSTEM. THE TREATMENT SYSTEM IS DESIGNED TO RUN CONTINUOUSLY AT A MAXIMUM FLOW RATE OF 60 GPM. AT PEAK FLOW, THIS TANK WILL PROVIDE APPROXIMATELY THREE HOURS OF EQUALIZATION DETENTION TIME. THE AVERAGE ANNUAL INFLUENT FLOW RATE, HOWEVER, IS ESTIMATED AT APPROXIMATELY 20 GPM. SURFACE WATER COLLECTED DURING PERIODS OF THESE LOWER INFLUENT FLOW RATES WILL BE ALLOWED TO ACCUMULATE IN THE EQUALIZATION TANK AND THEN TREATED AT THE SYSTEM DESIGN FLOW RATES.

6.1.2.1 SUSPENDED SOLIDS AND RADIONUCLIDE REMOVAL

WHEN THE TREATMENT IS INITIATED, THE WATER WILL BE PUMPED FROM THE SURGE TANKS TO TRAILER 1, AND SUBSEQUENTLY TO TRAILER 2, WHICH CONTAIN ALL

1

EQUIPMENT, TANKS, PUMPS, PIPING, VALVES, AND INSTRUMENTATION FOR CROSS-FLOW MEMBRANE FILTRATION. THE SYSTEM CONSISTS OF TOTALLY INTEGRATED, SKID-MOUNTED AND AUTOMATICALLY CONTROLLED UNITS FOR MAXIMUM RELIABILITY AND MINIMUM OPERATOR SURVEILLANCE. THE SYSTEM IS DIVIDED

INTO VARIOUS SYSTEMS AS DESCRIBED BELOW.

MAIN REACTION SYSTEM

RADIONUCLIDES AND HEAVY METALS WILL BE PRECIPITATED AND/OR ADSORBED FROM SOLUTION IN THE MAIN REACTION SYSTEM. THE REACTION SYSTEM WILL INCLUDE TWO 1200-GALLON TANKS SIZED TO ENSURE COMPLETE PRECIPITATION OR ADSORPTION OF RADIONUCLIDES PRIOR TO GRAVITY FLOW TO THE FILTRATION SYSTEM. CHEMICAL METERING PUMPS, CONTROLLED BY PH OR OXIDATION REDUCTION POTENTIAL (ORP) MONITOR/CONTROLLERS, WILL ENSURE THAT OPTIMUM REACTION CONDITIONS ARE MAINTAINED AUTOMATICALLY. THE TANK WILL BE AGITATED WITH A HEAVY DUTY ELECTRIC MIXER. THE EQUIPMENT PROVIDED IN THE MAIN REACTION SYSTEM WILL BE AS FOLLOWS:

* (2) 1200-GALLON, RFP REACTION TANKS;
* (2) HEAVY-DUTY MIXER;
* (2) PH MONITORS/CONTROLLERS; AND
* (2) CHEMICAL METERING PUMP(S).

FERRIC SULFATE WILL BE INTRODUCED TO THE FIRST TANK IN A LIQUID SOLUTION. HOWEVER, A SYSTEM WILL BE PROVIDED TO DISSOLVE THE POWDERED CHEMICAL REAGENT, FOR CONTROLLED INTRODUCTION INTO THE MAIN REACTION SECTION. IN THE POWDERED CHEMICAL MAKE-UP SYSTEM, A COVERED TANK WILL BE PERIODICALLY FILLED WITH WATER, AND POWDERED FERRIC SULFATE WILL BE ADDED MANUALLY IN A PRESCRIBED AMOUNT. A MIXER WILL BE PROVIDED TO ASSURE THAT THE REAGENT IS COMPLETELY DISSOLVED BEFORE IT IS DELIVERED BY A METERING PUMP TO THE MAIN REACTION SYSTEM.

LIME WILL BE ADDED TO THE SECOND TANK AS A SLURRY TO RAISE THE PH. THE ELEVATED PH WILL CAUSE PRECIPITATION OF THE IRON AS FERRIC HYDROXIDE AND CREATE CONDITIONS CONDUCIVE TO THE ADSORPTION OF URANIUM AND PLUTONIUM. THE LIME SLURRY WILL BE PREPARED BY FILLING A TANK WITH WATER AND THEN MANUALLY ADDING A PRESCRIBED QUANTITY OF LIME TO THE TANK THROUGH A CHUTE. THE MIXTURE WILL BE WELL AGITATED WITH A HEAVY-DUTY MIXER. THE SYSTEM WILL BE PROVIDED WITH A DUST CONTROL HOOD, FILTER, AND FAN.

THE ABOVE PERIPHERAL EQUIPMENT INCLUDES:

* (2) 250-GALLON, HEAVY-DUTY PLASTIC TANKS;
* (2) HEAVY-DUTY, RIM-MOUNTED MIXERS;
* (1) SLURRY RECIRCULATION PUMP AND PIPING (LIME); AND
* LEVEL CONTROL SWITCHES AND ALARMS, TO BE INTEGRATED ELECTRONICALLY WITH THE MAIN SYSTEM PANEL.

FILTRATION SYSTEM

THE FERRIC HYDROXIDE AND SUSPENDED SOLIDS IN THE REACTION SECTION ARE REMOVED FROM THE WATER AND CONCENTRATED IN THE FILTRATION SYSTEM.

THE MAIN COMPONENTS OF THE FILTRATION SYSTEM ARE:

* (1) 3000-GALLON, FIBERGLASS-REINFORCED PLASTIC (FRP) CONCENTRATION TANK;
* (2) 30-HP, 700-GPM RECIRCULATION PUMP;
* (28) CROSS-FLOW MEMBRANE FILTRATION MODULES; AND
* (1) PIPED-IN-PLACE MEMBRANE CLEANING SYSTEM.

THE CONCENTRATION TANK WILL BE MADE OF FIBERGLASS REINFORCED EPOXY EQUIPPED WITH APPROPRIATE BAFFLES AND LIQUID LEVEL CONTROLS. THE RECIRCULATION PUMP WILL BE STAINLESS STEEL FOR CORROSION RESISTANCE AND RATED AT 100 FEET OF HEAD. THE PUMP WILL BE PROVIDED WITH WATER-FLUSHED DOUBLE MECHANICAL SEALS.

THE TREATED WATER WILL BE FILTERED THROUGH TUBULAR (1" DIAMETER) FILTRATION MEMBRANES MADE OF FLUOROCARBON POLYMER, AND ARRANGED IN TRAINS OF 10-TUBE MODULES PIPED IN SERIES, SUPPORTED ON ACCESSIBLE HORIZONTAL RACKS. EACH MODULE WILL BE 6-FEET LONG AND 7-INCHES IN DIAMETER, WITH A SEPARATE OUTLET FOR CLEAN EFFLUENT. A FLOW INDICATING AND TOTALIZING METER WILL BE PROVIDED ON THE EFFLUENT LINE. MANIFOLDS WILL BE PROVIDED TO COLLECT THE EFFLUENT AND DIRECT IT BY GRAVITY TO THE NEUTRALIZATION SYSTEM. THE METAL/RADIONUCLIDE SUSPENSION WILL BE CONCENTRATED TO A 2 TO 5 PERCENT SLURRY IN THE CONCENTRATION TANK, FROM WHICH IT WILL BE PERIODICALLY PUMPED TO THE SLURRY HOLDING TANK AND FILTER PRESS IN THE SLURRY DEWATERING SYSTEM. THE SLURRY REMOVAL RATE WILL BE ADJUSTED MANUALLY TO MAINTAIN THE DESIRED SOLIDS CONCENTRATION IN THE FILTRATION SECTION. ALL PIPING AND VALVES IN CONTACT WITH THE WATER BEING TREATED WILL BE HEAVY-DUTY, CORROSION-RESISTANT PLASTIC.

NEUTRALIZATION SYSTEM

A SKID-MOUNTED NEUTRALIZATION SYSTEM WILL BE PROVIDED TO ADJUST THE EFFLUENT PH TO THE CONDITIONS REQUIRED FOR DISCHARGE OR RECYCLE. THE NEUTRALIZATION SYSTEM WILL BE SIZED TO RECEIVE AND TREAT THE EFFLUENT FROM THE MEMBRANE FILTERS. THE NEUTRALIZED EFFLUENT WILL LEAVE THE SYSTEM BY GRAVITY. THE EQUIPMENT AND COMPONENTS OF THE NEUTRALIZATION SYSTEM ARE AS FOLLOWS:

* (1) 1500-GALLON, HEAVY-DUTY PLASTIC TANK;
* (1) HEAVY-DUTY RIM-MOUNTED MIXER;
* (1) METERING PUMP FOR ACID; AND
* (1) SEPARATE CONTROL PANEL CONTAINING:
  1 PH MONITOR/CONTROLLER
  1 PH RECORDER
  PH OUT-OF-SPECIFICATION ALARM
  ELECTRICAL SWITCHES AND CONTACTORS.

PROCESS INSTRUMENTATION SYSTEM

A CENTRAL CONTROL PANEL WITH A NATIONAL ELECTRICAL MANUFACTURER'S ASSOCIATION (NEMA) 4 RATING WILL BE PROVIDED TO HOUSE ALL CONTROLS, ELECTRICAL SWITCHES AND DISCONNECTS, AND MOTOR STARTERS. THE MAIN ITEMS WILL INCLUDE THE FOLLOWING:

* PH AND ORP MONITOR/CONTROLLERS/ALARMS;
* INDICATOR LIGHTS, SWITCHES AND ALARMS FOR MAJOR COMPONENTS;
* MOTOR STARTERS AND CIRCUIT BREAKERS FOR ALL PUMPS;
* SEAL WATER ALARMS;
* LEVEL CONTROLS AND ALARMS; AND
* EFFLUENT FLOW INDICATOR/TOTALIZER.

ALL WIRING AND CONTROLS WILL MEET APPLICABLE NATIONAL ELECTRICAL CODES.

SOLID DEWATERING SYSTEM

THE SOLIDS DEWATERING SYSTEM WILL INCLUDE A 4-CUBIC-FOOT FILTER PRESS USING AN AIR-OPERATED SLURRY FEED PUMP TO FEED CONCENTRATED WASTE SLURRY FROM THE CONCENTRATION TANK TO THE FILTER PRESS. THE FILTER PRESS WILL DEWATER THE SOLID TO 35 TO 50 PERCENT SOLIDS. BASED ON THE PRELIMINARY SIZING, IT IS EXPECTED THAT THE PRESS WILL BE EMPTIED ONCE EVERY FIVE DAYS. THE FILTRATE PRODUCED BY THE FILTER PRESS WILL ALSO BE DIRECTED BACK TO THE CONCENTRATION TANK OR THE FEED SUMP FOR REPROCESSING. THE FILTER PRESS SLUDGE CAKE IS COLLECTED SAFELY AND WITH MINIMAL WORKER EXPOSURE. AN AIR BLOWDOWN SYSTEM AUTOMATICALLY REMOVES THE SLUDGE CAKE FROM THE PRESS. THE CAKE THEN FALLS THROUGH SLUDGE CAKE CHUTES MOUNTED UNDER THE FILTER PRESS (ELEVATED) AND INTO DRUMS. SHEETING WILL BE PLACED AROUND THE TRANSFER EQUIPMENT AND DRUMS FOR SPLASH PROTECTION.

6.1.2.2 ORGANIC CONTAMINANT REMOVAL

ORGANIC CONTAMINANT REMOVAL BY GAC IS A CONSIDERABLY SIMPLER PROCESS. AFTER CROSS-FLOW MEMBRANE FILTRATION, THE SURFACE WATER WILL BE PUMPED THROUGH TWO GAC COLUMNS IN SERIES, OPERATED IN DOWNFLOW FIXED-BED MODE (FIGURE 6-1). TWO ADDITIONAL GAC COLUMNS WILL BE IN STOCK. EACH CARBON COLUMN IS 60 INCHES IN DIAMETER AND 87 INCHES HIGH AND CONTAINS 2000 POUNDS OF CARBON. BASED ON A FLOW RATE OF 60 GPM, THE HYDRAULIC LOADING TO EACH COLUMN WILL BE APPROXIMATELY 3 GPM/SQUARE FEET. EMPTY BED CONTACT TIME FOR EACH COLUMN WILL BE APPROXIMATELY 18 MINUTES. THE COLUMNS ARE OF STAINLESS STEEL CONSTRUCTION AND WILL BE INTERCONNECTED BY FLEXIBLE PIPE WITH 2-INCH CAMLOCK HOSE CONNECTIONS. ONCE THE COLUMN IS DRAINED OF WATER, THE UNIT IS A SHIPPING CONTAINER FOR RETURNING THE CARBON FOR REGENERATION.

6.1.2.3 EFFLUENT DISCHARGE

FOLLOWING TREATMENT, THE WATER WILL CONTINUOUSLY DISCHARGE TO SOUTH

WALNUT CREEK JUST DOWNGRADIENT OF CS-134. SAMPLES WILL BE COLLECTED AND ANALYZED TWICE PER WEEK. IN THE UNLIKELY EVENT OF OFF-SPECIFICATION PROCESSING OR TREATMENT PROCESS FAILURE, THE TREATMENT SYSTEM DISCHARGE WILL AT MOST RETURN THE DRAINAGE TO ITS PRE-IM/IRA CONDITION. IN ADDITION, DETENTION, TREATMENT, AND MONITORING AT POND B-5 PROVIDES A DOWNGRADIENT SAFEGUARD.

6.2 OPERATION AND MAINTENANCE

6.2.1 SURFACE WATER COLLECTION

THE COLLECTION SYSTEMS ARE RELATIVELY MAINTENANCE FREE. MANHOLES, SUMPS, AND BACKWATER POOLS WILL REQUIRE PERIODIC CLEANING TO REMOVE ACCUMULATED SOLIDS. PUMPS WILL ALSO REQUIRE ROUTINE INSPECTION AND MAINTENANCE.

6.2.2 CROSS-FLOW MEMBRANE FILTRATION

THE CROSS-FLOW MEMBRANE FILTRATION SYSTEM'S INSTRUMENTATION AND CONTROLS WILL MONITOR AND AUTOMATICALLY ADJUST CHEMICAL FEED RATES. SYSTEM LEVEL SWITCHES WILL AUTOMATICALLY OPERATE THE FEED AND PROCESS PUMPS TO ALLOW FOR THE CONTINUOUS FLOW OF SURFACE WATER THROUGH THE SYSTEM. INTERLOCKS AND ALARMS WILL AUTOMATICALLY SHUT DOWN THE SYSTEM IF CRITICAL COMPONENTS ARE OPERATING OUTSIDE THE DESIGN LIMITS. THEREFORE, THE SYSTEM WILL BE CAPABLE OF PROCESSING SURFACE WATER WITH ONLY MINIMAL

OPERATOR ATTENTION. HOWEVER, OPERATOR ATTENTION REQUIRED FOR THE SYSTEM, ESTIMATED AT LESS THAN TWO HOURS PER SHIFT, WILL INCLUDE THESE TASKS:

1. MAINTAINING APPROPRIATE SOLIDS CONCENTRATION IN THE CONCENTRATION TANK BY ADJUSTING THE AMOUNT OF WASTE SLURRY FEED TO THE DEWATERING SECTION;

2. REPLENISHING CHEMICALS AS NEEDED;

3. ROUTINE CLEANING AND CALIBRATION OF PH OR ORP PROBES; AND

4. PERIODICALLY INITIATING THE CLEANING CYCLE AND CHANGING THE CLEANING SOLUTION. TYPICALLY, A CLEANING CYCLE TAKES LESS THAN 1 HOUR AND IS CARRIED OUT ONCE EVERY 40 TO 80 HOURS OF SYSTEM OPERATION.

THE FILTRATION SYSTEM INCLUDES A CLEANING LOOP TO PROVIDE FOR RAPID CONVENIENT IN-PLACE CLEANING OF THE MEMBRANE SURFACE. THIS INCLUDES TWO 500-GALLON POLYPROPYLENE TANKS, AN ALL-PLASTIC CLEANING PUMP (5 HP, 100 GPM AT 80 FEET OF HEAD) AND APPROPRIATE VALVES AND PIPING SO THAT THE PERIODIC CLEANING PROCEDURE CAN BE CARRIED OUT CONVENIENTLY AND QUICKLY. ACTUAL OPERATING EXPERIENCE WILL DETERMINE THE CLEANING FREQUENCY REQUIRED FOR OPTIMUM PERFORMANCE OF THE SYSTEM. DURING THE CLEANING PROCEDURE, FRESH WATER IS USED TO FLUSH THE WASTE SLURRY FROM THE

MODULES BACK TO THE CONCENTRATION TANK, AND A CLEANING SOLUTION (USUALLY A STRONG ACID) IS CIRCULATED THROUGH THE MODULES WITH THE CLEANING PUMP FOR A FEW MINUTES. FINALLY, THE CLEANING SOLUTION IS FLUSHED FROM THE MODULES WITH CLEAN WATER. PROVISION IS MADE TO REPROCESS THE CLEANING SOLUTION AS PART OF THE NORMAL WASTE STREAM SO THAT ONLY CLEAN EFFLUENT LEAVES THE SYSTEM.

6.2.3 ACTIVATED CARBON

OPERATION AND MAINTENANCE OF THE GAC SYSTEM IS ALSO RELATIVELY SIMPLE. TO COMPLETELY UTILIZE THE CARBON, THE COLUMNS WILL BE ARRANGED IN SERIES, ALLOWING THE LEAD COLUMN TO BECOME FULLY EXHAUSTED FOR SUBSEQUENT REGENERATION WHILE THE SECOND (POLISHING) COLUMN ENSURES EFFLUENT QUALITY. PERIODIC SAMPLES WILL BE TAKEN FROM THE EFFLUENT OF EACH UNIT, AND WHEN THE LEAD UNIT EFFLUENT EXCEEDS CHEMICAL-SPECIFIC ARARS, THE LEAD CARBON COLUMN WILL BE REMOVED, THE POLISHING (SECOND) COLUMN WILL BECOME THE LEAD COLUMN, AND A STOCK CARBON COLUMN WILL BE PUT IN SERVICE AS THE POLISHING UNIT. THIS IS EXPECTED TO OCCUR EVERY THREE WEEKS. THE CARBON COLUMN WITH THE EXHAUSTED CARBON WILL THEN BE SHIPPED TO AN OFF-SITE LOCATION FOR REGENERATION.

6.3 ADDITIONAL DOCUMENTS

IN ADDITION TO THIS IM/IRA PLAN, EG&G WILL ALSO BE PREPARING THE FOLLOWING DOCUMENTS:

* SITE SPECIFIC HEALTH AND SAFETY PLAN (SSHSP) FOR CONSTRUCTION AND OPERATION OF THE IM/IRA;
* COMMUNITY RELATIONS PLAN (CRP);
* DETAILED DESIGN PLANS AND SPECIFICATIONS;
* DETAILED "AS-BUILT" DRAWINGS INCORPORATING ALL FIELD CHANGES TO ACCURATELY REFLECT THE CONSTRUCTED SURFACE

WATER COLLECTION AND TREATMENT SYSTEM; AND
* AN OPERATION AND MAINTENANCE MANUAL (O&M) FOR THE IM/IRA.

THE SSHSP AND O&M MANUAL WILL BE PREPARED AFTER THE IM/IRA DESIGN IS FINALIZED SINCE THESE DOCUMENTS PROVIDE PROJECT-SPECIFIC PROCEDURES FOR CONSTRUCTION AND OPERATING ACTIVITIES. THE CRP WILL BE AVAILABLE FOR PUBLIC COMMENT ON 30 JANUARY 1991 AND WILL BE IMPLEMENTED IN AUGUST 1991.

6.4 TREATABILITY STUDIES

A PREFERRED SURFACE WATER TREATMENT SYSTEM FOR THE PROPOSED IM/IRA HAS BEEN SELECTED IN SPITE OF SEVERAL INFORMATIONAL CONSTRAINTS. FIRST, IT IS UNCERTAIN, ALTHOUGH UNLIKELY BASED ON THE AVAILABLE DATA, THAT METHYLENE CHLORIDE, VINYL CHLORIDE, AND ACETONE ARE PRESENT WITHIN SOUTH WALNUT CREEK BASIN SURFACE WATERS. SECOND, LIMITED TREATMENT TECHNOLOGY PERFORMANCE DATA CURRENTLY EXIST FOR REMOVAL OF PLUTONIUM AND AMERICIUM FROM NATURAL WATERS. THIS IS PARTICULARLY TRUE IN THE CASE OF ION

EXCHANGE. FINALLY, THE PHYSICAL STATE OF PLUTONIUM AND AMERICIUM (I.E., DISSOLVED VS. COLLOIDAL) IN SURFACE WATERS IS NOT COMPLETELY UNDERSTOOD, NOR HAVE THE RADIONUCLIDES THAT CONTRIBUTE TO THE GROSS ALPHA AND BETA ACTIVITY BEEN DEFINED. THE SELECTED TREATMENT SYSTEM IS THE LOGICAL CHOICE GIVEN THE AVAILABLE SURFACE WATER QUALITY DATA, LITERATURE INFORMATION REGARDING PLUTONIUM AND AMERICIUM CHEMISTRY AND TREATMENT PROCESSES FOR THEIR REMOVAL, AND BEST ENGINEERING JUDGEMENT.

HOWEVER, TREATABILITY STUDIES ARE APPROPRIATE TO CONFIRM THE SELECTION OF THE PREFERRED TREATMENT SYSTEM OR TO PROVIDE THE BASIS FOR SELECTION OF AN ALTERNATIVE SYSTEM SHOULD THE PREFERRED SYSTEM BE JUDGED TO NOT PERFORM ADEQUATELY.

THE DOE WILL CONDUCT BENCH- AND FIELD-SCALE TREATABILITY STUDIES TO DETERMINE THE EFFECTIVENESS OF CROSS-FLOW MEMBRANE FILTRATION, GAC, ION EXCHANGE AND OTHER TECHNOLOGIES IN TREATING SOUTH WALNUT CREEK BASIN SURFACE WATERS. OBJECTIVES OF THE BENCH-SCALE STUDY INCLUDE DETERMINATION OF APPLICABILITY OF THE TREATMENT TECHNOLOGY, QUANTIFICATION OF MAJOR OPERATING PARAMETERS, EVALUATION OF PERFORMANCE RELATIVE TO MEETING CHEMICAL-SPECIFIC ARARS AND REEVALUATION OF CAPITAL AND OPERATING COSTS. GAC WILL BE TESTED USING A FIELD TREATMENT UNIT WHICH WILL BE DEPLOYED IN THE NORTHWEST PORTION OF THE EAST TRENCHES AREAS FOR TREATMENT OF SURFACE WATER FROM STATIONS SW-59, SW-61, AND SW-132. THE INITIAL OPERATIONAL UNIT OF THE FIELD UNIT IS EXPECTED TO BE INSTALLED AND STARTED UP IN THE SPRING 1991. BECAUSE THIS FIRST UNIT (THE GAC SYSTEM) WILL BE USED PRIMARILY TO DEMONSTRATE ORGANIC CONTAMINANT REMOVAL EFFICIENCIES, IT WILL NOT BE EXPECTED TO ATTAIN CHEMICAL-SPECIFIC ARARS FOR METALS AND RADIONUCLIDES BY ITSELF. ADDITIONAL UNITS WILL BE ADDED OVER A SEVERAL MONTH PERIOD TO EVALUATE METALS AND RADIONUCLIDES REMOVAL. OPERATION OF THIS FIELD-SCALE FACILITY WILL INCLUDE TESTING AND MODIFICATION OF THE ORIGINAL EQUIPMENT AS WELL AS THE ADDITION OF SUPPORT EQUIPMENT AND/OR ALTERNATIVE TREATMENT ELEMENTS. A SUMMARY REPORT OF THE TREATABILITY STUDY FINDINGS WILL BE SUBMITTED TO THE REGULATORY AGENCIES UPON COMPLETION OF THE PROGRAM. THE RESULTS OF THESE TESTS AND THE BENCH-SCALE TREATABILITY STUDIES MAY INDICATE THAT IT IS NOT PRACTICABLE TO ATTAIN ALL ARARS FOR THE SURFACE WATER IM/IRA. FINAL PERFORMANCE REQUIREMENTS FOR THE IM/IRA WILL REQUIRE APPROVAL BY THE REGULATORY AGENCIES.

ENVIRONMENTAL EFFECTS OF THE PROPOSED INTERIM REMEDIAL ACTION

THE PROPOSED SURFACE WATER IM/IRA, AND POTENTIAL SUBSEQUENT ENVIRONMENTAL AND HUMAN HEALTH EFFECTS RESULTING FROM THIS ACTION, ARE EVALUATED IN THIS CHAPTER. ENVIRONMENTAL IMPACTS TO AIR QUALITY, WATER QUALITY, TERRESTRIAL FEATURES (INCLUDING WILDLIFE AND WETLANDS), ARCHAEOLOGY AND HISTORIC SITES, AND SHORT- AND LONG-TERM LAND PRODUCTIVITY ARE DISCUSSED IN SECTIONS 7.1, 7.2, 7.3, 7.4 AND 7.5, RESPECTIVELY. HUMAN HEALTH EXPOSURE RISKS FROM INSTALLATION, ROUTINE OPERATIONS, AND ACCIDENTS ARE ANALYZED IN DETAIL IN SECTIONS 7.6 AND 7.7. THESE ANALYSES EVALUATE THE RISKS TO WORKERS INVOLVED IN THE

IM/IRA, TO OTHER RFP SITE EMPLOYEES, AND TO THE GENERAL PUBLIC. THE COMMITMENT OF RESOURCES (MATERIAL/HUMAN), TRANSPORTATION IMPACTS AND CUMULATIVE IMPACTS ARE DISCUSSED IN SECTIONS 7.8 THROUGH 7.10.

7.1 AIR QUALITY

THERE ARE THREE POTENTIAL AIR QUALITY IMPACTS ASSOCIATED WITH THE PROPOSED OU 2 IM/IRA TO SELECTIVELY COLLECT AND TREAT SURFACE WATER WITHIN THE SOUTH WALNUT CREEK BASIN OU 2 FROM SURFACE SEEPS AND SURFACE WATER MONITORING STATIONS. THESE ARE:

1. POTENTIAL VOCS RELEASED FROM EXPOSED CONTAMINATED LIQUIDS DURING CONSTRUCTION ACTIVITIES (I.E., SUMP INSTALLATION, TRENCH EXCAVATION) OR AT SURFACE WATER COLLECTION, STORAGE, AND TREATMENT LOCATIONS, AS PART OF NORMAL OPERATIONS OR ACCIDENT CONDITIONS.

2. FUGITIVE DUSTS AND FOSSIL FUEL CONSUMPTION RELATED EXHAUSTS RESULTING FROM ACTIVITIES SUCH AS EXCAVATION, CONSTRUCTION, OPERATIONS, MAINTENANCE, AND MONITORING.

3. WATER TREATMENT PROCESS OFF-GASSING RELEASED TO THE ENVIRONMENT AS PART OF NORMAL OPERATIONS OR ACCIDENT CONDITIONS.

AIR QUALITY IMPACTS FROM VOCS RELEASED DURING CONSTRUCTION ACTIVITIES (E.G., EXCAVATION) WILL BE MINIMAL WHEN COMPARED TO THE NORMAL OPERATIONAL ACTIVITY AT THE ROCKY FLATS PLANT. THE "PHASE II RFI/RIFS WORKPLAN" FOR OU 2 SHOWS VOCS HAVE BEEN DETECTED IN THE SOUTH WALNUT CREEK BASIN SOILS AND INCLUDE ACETONE (UP TO 500 PPB), AND BIS(2-ETHYLHEXYL) PHTHALATE (4,600 PPB) (EG&G, 1990A). TABLE A-10 IN APPENDIX A PRESENTS THE TEST RESULTS FOR VOCS COMPILED AS PART OF THIS REPORT. DUE TO THEIR ISOLATED OCCURRENCE, AND THE LIMITED AMOUNT OF EXCAVATION PLANNED, THE AMOUNT OF VOCS RELEASED DURING THIS CONSTRUCTION ACTIVITY ARE NOT LIKELY TO CAUSE MEASURABLE CHANGES IN THE AMBIENT AIR QUALITY. BASED ON SAMPLE ANALYSES TO DATE, VOC CONCENTRATIONS IN SOILS AT SOUTH WALNUT CREEK ARE INSIGNIFICANT. CONSEQUENTLY, NORMAL CONSTRUCTION ACTIVITIES AND EXCAVATION FOR SUMP INSTALLATION, BURIED PIPELINE/UTILITIES AND PREPARATION OF THE PAD AREA FOR THE TREATMENT SYSTEM MAY NOT RELEASE VOCS TO THE ATMOSPHERE. PRELIMINARY CHARACTERIZATION, BASED ON THE PHASE I RI REPORT, INDICATES THE PRESENCE OF ELEVATED CONCENTRATIONS OF SEMI-VOLATILE ORGANIC CHEMICALS (PHTHALATES) IN THE SOIL. ANY AIRBORNE RELEASES OF SEMI-VOLATILE ORGANIC CHEMICALS WILL BE FROM FUGITIVE DUSTS ASSOCIATED WITH CONSTRUCTION ACTIVITIES AND WILL BE CONTROLLED AS DISCUSSED BELOW.

DUST ASSOCIATED WITH CONSTRUCTION AND OPERATIONAL ACTIVITIES WILL BE CONTROLLED AS SPECIFIED IN THE ENVIRONMENTAL RESTORATION'S HEALTH AND

SAFETY PROGRAM PLAN (ERHSPP). THE ERHSPP ADDRESSES THE MINIMUM HEALTH AND SAFETY REQUIREMENTS FOR OUTSIDE CONTRACTORS AS DICTATED BY THE ER DEPARTMENT AND THE HEALTH SAFETY (HS) DEPARTMENT. THE ERHSPP IS IN FINAL FORM AND IS CURRENTLY UNDERGOING A FINAL REVIEW BY EPA AND CDH.

THE ERHSPP OUTLINES THE REQUIREMENTS FOR A PROJECT-SPECIFIC OR SITE SPECIFIC HEALTH AND SAFETY PLAN (SSHSP) THAT IDENTIFIES CONSTRUCTION TASKS, POTENTIAL HAZARDS, AND THE STEPS TO CONTROL HAZARDS. THE SSHSP WILL BE PREPARED IN ACCORDANCE WITH GUIDELINES SET FORTH IN THE ERHSPP, AND WILL BE COMPLETED AFTER THE IM/IRA DESIGN IS FINALIZED SINCE THIS PLAN PROVIDES PROCEDURES FOR SPECIFIC IM/IRA CONSTRUCTION AND OPERATING ACTIVITIES. THE SSHSP MUST BE APPROVED BY THE ER AND HS DEPARTMENTS, AND WILL BE REVIEWED BY EPA AND CDH.

UPON APPROVAL OF THE SSHSP, THE OUTSIDE CONTRACTOR IS BRIEFED AND ASSIGNED AN RFP CONSTRUCTION ENGINEER. THIS ENGINEER IS RESPONSIBLE FOR CONSTRUCTION MANAGEMENT AND IMPLEMENTATION OF THE SSHSP BY THE CONTRACTOR. THE HS DEPARTMENT WILL THEN ISSUE A RENEWABLE ONE-WEEK PERMIT, CONDITIONAL ON THE WORKERS BEING BRIEFED AND UNDERSTANDING THE HEALTH AND SAFETY CONCERNS OF THE CONSTRUCTION EFFORT. THE CONSTRUCTION IS MONITORED BY THE HS DEPARTMENT FOR CONTRACTOR ADHERENCE TO THE SSHSP.

IN ADDITION TO THESE REQUIREMENTS, THE ER DEPARTMENT HAS DEVELOPED WIND SPEED AND DUST CONTROL SHUT-DOWN LIMITS AS GUIDELINES FOR THE 881 HILLSIDE IM/IRA. SIMILAR PROJECT DOCUMENT GUIDELINES WILL ALSO BE REQUIRED FOR CONSTRUCTION OF THE SOUTH WALNUT CREEK BASIN IM/IRA AT OU 2.

DERMAL EXPOSURE, INHALATION, AND INADVERTENT INGESTION OF AIRBORNE RADIOACTIVITY AND VOCS ON FUGITIVE DUSTS IS ANALYZED IN SECTION 7.6, "PERSONNEL EXPOSURE-ROUTINE OPERATIONS". POLLUTION FROM ENGINE EMISSIONS, FUGITIVE DUST GENERATION BY VEHICLES AND PARTICULATES FROM TIRE WEAR ARE ANALYZED SEPARATELY IN SECTION 7.9, "TRANSPORTATION IMPACTS".

COLLECTED CONTAMINATED SURFACE WATER WILL BE PROCESSED THROUGH THE PROPOSED CROSS-FLOW MEMBRANE FILTRATION SYSTEM AND ACTIVATED CARBON SYSTEM FACILITY. DUE TO THE LOW VOC CONCENTRATIONS IN THE SURFACE WATER, THE PROPOSED TREATMENT SYSTEM WILL NOT PRODUCE MEASURABLE VOC EMISSIONS; THEREFORE, NO CHANGES IN THE LEVELS OF THESE GASES IN THE AMBIENT AIR OFF SITE IS EXPECTED. THE NEED FOR PERIODIC MEMBRANE CLEANING WILL REQUIRE THE USE OF A SMALL AMOUNT OF SODIUM HYPOCHLORITE (NAOHCL). THIS COULD OCCUR ONCE EVERY 2 TO 4 WEEKS AND WILL NOT IMPACT OFF-SITE AIR QUALITY.

THE CROSS-FLOW MEMBRANE FILTRATION SYSTEM INCORPORATED INTO THE WATER TREATMENT SYSTEM TO REMOVE SUSPENDED SOLIDS, DISSOLVED METALS, AND RADIONUCLIDES MAY NOT CONTRIBUTE TO EMISSIONS DURING NORMAL OPERATIONS OR BACK FLUSHING OPERATIONS. MIXING OF CHEMICALS FOR WATER PRETREATMENT OR STRONG ACIDS OR BASES USED FOR HARDWARE CLEANING OPERATIONS MAY CONTRIBUTE TO ODORS WITHIN THE CONFINES OF THE WATER TREATMENT TRAILERS AND SHOULD BE CONTROLLED BY ADEQUATE VENTILATION. THESE ODORS WILL NOT BE NOTICEABLE FROM OUTSIDE THE TREATMENT FACILITY AREA, NOR WILL THEY BE A HAZARD TO WORKERS IN THE TRAILERS UNDER NORMAL CIRCUMSTANCES. SPILLS OF CHEMICALS THAT MIGHT BE INVOLVED IN ACCIDENT CONDITIONS WILL BE

ADMINISTRATIVELY CONTROLLED BY ACTIONS SPECIFIED IN THE OPERATIONAL SAFETY ANALYSIS (OSA).

THE OSA ADDRESSES HEALTH AND SAFETY CONCERNS ORIGINATING FROM ROUTINE SITE OPERATIONS. IT IS SIMILAR TO THE SSHSP IN THAT HEALTH, SAFETY, AND ENVIRONMENTAL HAZARDS ARE IDENTIFIED AND EVALUATED FOR CONTROL. THIS ANALYSIS IS ALSO REVIEWED BY AND MUST BE APPROVED BY THE HS DEPARTMENT. TRAINING IS REQUIRED PRIOR TO OPERATION WITH OVERSIGHT AND MONITORING BY THE HS DEPARTMENT.

OPERATION AND MAINTENANCE OF THE GAC SYSTEM ARE SIMPLER THAN FOR THE CROSS-FLOW MEMBRANE FILTRATION SYSTEM. THE GAC COLUMNS, CONTAINING EXHAUSTED CARBON, WILL BE SHIPPED TO AN OFF-SITE LOCATION FOR REGENERATION. SPILLS OF LIQUIDS ASSOCIATED WITH THE OPERATION OF THE GAC COLUMNS WILL BE LIMITED TO THE EFFLUENT EXITING THE CROSS-FLOW MEMBRANE FILTRATION SYSTEM, WHICH WILL HAVE REMOVED MANY OF THE CONSTITUENTS OF CONCERN. THE EFFLUENT WATER FROM THE MEMBRANE FILTRATION TREATMENT SYSTEM MAY CONTAIN SOME AMOUNT OF VOCS. EFFLUENT CONCENTRATION REQUIREMENTS ARE CONTAINED IN TABLE 4-1, BASIS FOR DESIGN OF SURFACE WATER TREATMENT.

7.2 WATER QUALITY

THE PROPOSED IM/IRA WILL REDUCE THE CONTAMINANT LOADING TO SOUTH WALNUT CREEK. SURFACE WATER RUNOFF ENTERING EXCAVATED AREAS AND EXCEEDING THE DESIGN CAPACITIES OF THE SYSTEM MAY CREATE SOIL ENTRAINMENT (SEDIMENT TRANSPORT) BY SURFACE RUNOFF ENDING IN OPEN WATERS ON SITE. THE AMOUNT OF WATER EXCEEDING THE DESIGN CAPACITY OF THE COLLECTION SYSTEM SHOULD BE MINIMAL.

SOME EXCAVATION WILL OCCUR IN SOILS THAT ARE EXPECTED TO HAVE MEASURABLE LEVELS OF SEMI-VOLATILE ORGANIC CHEMICALS, PRIMARILY PHTHALATES. BECAUSE PHTHALATES ADSORB ONTO THE SOIL PARTICLES AND THUS ARE NOT TRANSFERRED FROM SOIL TO WATER IN MEASURABLE QUANTITIES, SURFACE WATER RUNOFF SHOULD NOT CAUSE A WATER QUALITY CONCERN AS LONG AS EROSION CONTROL MEASURES ARE APPLIED TO ALL SOILS EXCAVATED DURING REMEDIAL ACTION. THE IM/IRA CONSTRUCTION SPECIFICATIONS WILL INCLUDE POST-EXCAVATION EROSION CONTROL MEASURES. TECHNIQUES MAY INCLUDE, BUT NOT BE LIMITED TO FIBER COMPOSITE NETS, GROUTED RIPROCK, HYDROMULCHING, AND SEEDING.

SOUTH WALNUT CREEK BASIN SOILS WITHIN OU 2 ARE CONTAMINATED WITH PLUTONIUM AND AMERICIUM (ROCKWELL INTERNATIONAL, 1989A). PRIOR TO CONSTRUCTION WORK FOR THE SURFACE WATER CONTAMINATION CLEANUP, SURVEYS WILL BE PERFORMED TO DETECT ANY PRESENCE OF ELEVATED RADIOACTIVE CONTAMINATION. ELEVATED RADIOACTIVE CONTAMINATION WILL BE HANDLED IN ACCORDANCE WITH THE SSHSP PROCEDURES.

FOR THE CROSS-FLOW MEMBRANE FILTRATION SYSTEM, THE GREATEST POTENTIAL FOR NEGATIVE WATER QUALITY IMPACTS RESULTS FROM CHEMICALS INVOLVED IN

THE PRETREATMENT OF THE WASTE STREAM AND CONCENTRATED ACIDS OR BASES UTILIZED PERIODICALLY FOR DESCALING OF EQUIPMENT. HANDLING OF THE CONCENTRATED CLEANING CHEMICALS WILL BE GOVERNED BY AN OSA, AS WILL THE PRECAUTIONS FOR HANDLING THE DEWATERED SOLIDS GENERATED IN THE WATER TREATMENT PROCESS.

DEWATERED SOLIDS WILL BE HANDLED AS A LOW-LEVEL MIXED WASTE. THIS WILL REQUIRE SOLIDIFICATION AT AN EXISTING RFP FACILITY TO MEET THE TRANSPORTATION AND DISPOSAL REQUIREMENTS. THE SOLIDIFIED WASTE WILL BE DISPOSED OF AT THE NEVADA TEST SITE OR SIMILAR FACILITY AFTER IT IS SAMPLED AND ANALYZED TO DETERMINE COMPLIANCE WITH RECENTLY PROMULGATED RCRA LAND BAN RESTRICTIONS.

THE VOLUME OF WASTE WILL NOT BE A MAJOR ADDITION TO THOSE WASTES ALREADY PROCESSED AT THE RFP. THE COLLECTION, TRANSPORT, AND TREATMENT OF THE DEWATERED SOLIDS WILL BE IN ACCORDANCE WITH STANDARD PLANT OPERATING PROCEDURES AND DOES NOT PRESENT A SIGNIFICANT HAZARD TO ON-SITE OR OFF-SITE WATER QUALITY.

THE GAC ADSORPTION SYSTEM WILL PROVIDE EVEN LESS PROSPECTS FOR NEGATIVE IMPACT TO WATER QUALITY ON SITE THAN THE CROSS-FLOW MEMBRANE FILTRATION SYSTEM. THE CARBON COLUMNS WILL BE FULLY SELF-CONTAINED AND HOLD APPROXIMATELY 2,000 POUNDS OF CARBON. THE UNITS ARE SHIPPED TO AN OFF-SITE LOCATION FOR REGENERATION. APPROXIMATELY ONE GALLON OF WATER PER 3 TO 4 POUNDS OF CARBON (500 GALLONS) COULD BE SPILLED DURING UNIT CHANGEOUT OF THE CARBON COLUMN. THIS POSSIBILITY IS MITIGATED BY THE USE OF SECONDARY CONTAINMENT WHICH CAPTURES ALL OF THE POTENTIALLY SPILLED WATER. THE NET EFFECT IS THAT THERE WILL BE NO SPILL DURING CARBON COLUMN CHANGEOUT. PROCEDURES WILL BE ESTABLISHED FOR THE SAFE CHANGEOUT OF THE EXHAUSTED GAC COLUMNS. THE TRANSPORT OF THE EXHAUSTED GAC COLUMNS WILL BE IN ACCORDANCE WITH STANDARD PLANT AND PROJECT-SPECIFIC OPERATING PROCEDURES AND PRESENTS A NEGLIGIBLE HAZARD TO ON-SITE OR OFF-SITE WATER QUALITY.

7.3 TERRESTRIAL IMPACTS

TERRESTRIAL ENVIRONMENT FEATURES THAT MAY BE NEGATIVELY IMPACTED BY THE PROPOSED IM/IRA INCLUDE ANIMAL LIFE, PLANT LIFE, AND LAND FORMS (INCLUDING WETLANDS). THESE NEGATIVE IMPACTS ARE EXPECTED TO BE MINIMAL, BECAUSE OF THE DISTURBANCE TO THE AREAS OF CONCERN CAUSED BY THE PLANT'S CONSTRUCTION AND OPERATION DURING THE PAST 37 YEARS. THESE PAST DISTURBANCES HAVE LEFT THE 903 PAD WITH AN ASPHALT PAD CAP AND THE EAST TRENCHES AREA HAS SURFACE EVIDENCE OF BURIAL TRENCHES. THE EFFECTS OF THE IM/IRA WILL NOT SIGNIFICANTLY IMPACT THE ALREADY-DISTURBED AREAS. NUMEROUS SPECIES OF ANIMAL AND PLANT LIFE HAVE BEEN IDENTIFIED AT THE RFP. NO ANIMALS ARE CLASSIFIED AS RARE OR ENDANGERED (DOE, 1980).

ROCKY FLATS FLORA HAVE BEEN IDENTIFIED THROUGH AN ON-SITE INVENTORY BY DR. W.A. WEBER, ET. AL., (WEBER, 1974), FROM THE UNIVERSITY OF COLORADO. THE INVENTORY REVEALED 327 SPECIES OF VASCULAR PLANTS, 25 LICHENS, 16

BRYOPHYTES, AND ONE MACROSCOPIC GREEN ALGAE. NONE ARE THREATENED OR ENDANGERED.

THE PROPOSED SITE FOR THE TREATMENT FACILITY TRAILERS IS IN THE NORTHWEST SECTION OF THE EAST TRENCHES AREA, NORTH OF IHSS-110. LEVELING, EITHER BY THE ADDITION OF CLEAN FILL MATERIAL OR GRADING, WILL CAUSE MINIMAL ADVERSE IMPACT TO THE AREA. CONSTRUCTION ACTIVITIES COULD BE POTENTIALLY LOCALLY DESTRUCTIVE TO THE VEGETATION AND GROUND-DWELLING RODENTS, REPTILES AND INVERTEBRATES, BUT THIS IMPACT IS EXPECTED TO BE MINIMAL. NONE OF THE POTENTIALLY AFFECTED VERTEBRATES, INVERTEBRATES OR VEGETATION IN THE DISTURBED AREAS ARE THREATENED OR ENDANGERED. NO CRITICAL HABITATS ARE KNOWN IN THE STUDY AREA. THE PROPOSED IM/IRA WILL HAVE MINIMAL NEGATIVE IMPACT TO SOUTH WALNUT CREEK.

TWO SURFACE WATER COLLECTION POINTS (SW-59 AND SW-61) THAT FEED SOUTH WALNUT CREEK WERE OBSERVED IN APRIL 1990. FLOWS WERE RECORDED AT 37.3 GPM FOR SW-61 AND AT 4.5 GPM FOR SW-59. A THIRD SURFACE WATER COLLECTION POINT, DESIGNATED AS SW-132, IS EXPECTED TO PRODUCE 18 GPM. DIVERSION OF WATER FROM SW-59, SW-61 AND SW-132, PROCESSING THE WATER THROUGH THE PROPOSED TREATMENT PLANT, AND RE-INTRODUCING THE WATER JUST DOWNGRADIENT OF SW-132 SHOULD HAVE NO IMPACT ON THE WATER RESOURCES MANAGEMENT OF SOUTH WALNUT CREEK.

THE PROPOSED IM/IRA IS NOT EXPECTED TO HAVE AN ADVERSE EFFECT ON LINEAR WETLANDS. IN 1989, EG&G AUTHORIZED THE PREPARATION OF A WETLANDS ASSESSMENT FOR THE ENTIRE ROCKY FLATS PLANT SITE (EG&G, 1990B). THIS REPORT IDENTIFIED 107 ACRES OF AREAL WETLANDS AND 84,970 FEET OF LINEAR WETLANDS WITHIN THE ROCKY FLATS PLANT SITE. SOUTH WALNUT CREEK IS IDENTIFIED AS ONE OF SIX EPHEMERAL STREAMS TRAVERSING THE PROPERTY AND IS CONSIDERED RELATIVELY IMPORTANT AS PART OF THE SITE DRAINAGE SYSTEM. THE PROPOSED ACTION, AS IT IMPACTS WETLANDS, WILL NOT BE DISCERNIBLE FROM CURRENT STREAM MANAGEMENT.

NO WETLANDS IMPACT IS EXPECTED FROM TREATING WATER PRIOR TO REINTRODUCTION INTO SOUTH WALNUT CREEK. THE PROPOSED ACTION CALLS FOR WITHDRAWAL OF UP TO 37.5 GPM OF CONTAMINATED SURFACE WATER FROM STATION SW-61, 4.5 GPM FROM SW-59, AND 18 GPM FROM SW-132. WATER FROM THESE COLLECTION POINTS WILL BE DIVERTED INTO PROPERLY SIZED SUMPS AND PIPED TO A TREATMENT PLANT EQUALIZATION TANK TO PROVIDE THE TREATMENT PLANT WITH A CONSTANT FEEDSTOCK. WATER FROM THE TREATMENT PLANT WILL BE REINTRODUCED INTO SOUTH WALNUT CREEK IMMEDIATELY DOWNSTREAM OF CS-132. WATER DIVERTED FROM THE SOURCES WOULD BE REMOVED FROM THE SURFACE WATER SYSTEM FOR NO MORE THAN 3-4 HOURS AT 60 GPM AND FOR NO MORE THAN 48 HOURS AT VERY LOW FLOWS.

AS MENTIONED EARLIER, TREATED WATER FROM THE TREATMENT SYSTEM WILL BE DISCHARGED INTO SOUTH WALNUT CREEK, JUST DOWNGRADIENT OF CS-61 (THE SURFACE WATER COLLECTION SYSTEM OF SW-61). THE SOUTH WALNUT CREEK BASIN CONTAINS A SERIES OF FIVE ON-CHANNEL RESERVOIRS. THE LAST POND IN THE SERIES, POND B-5, DISCHARGES DIRECTLY INTO SOUTH WALNUT CREEK. WATER

VOLUME IS MANAGED BY THESE PONDS AND IS DISCHARGED DIRECTLY TO SOUTH WALNUT CREEK IN ACCORDANCE WITH THE PLANT'S NPDES PERMIT. DISCHARGED WATER FOLLOWS THE SOUTH WALNUT CREEK DRAINAGE NORTH TO THE NATURAL WALNUT CREEK DRAINAGE. SURFACE WATER FLOW IN WALNUT CREEK NEAR THE PROPERTY BOUNDARY IS CURRENTLY BEING DIVERTED AROUND GREAT WESTERN RESERVOIR, WHICH IS A DRINKING WATER SOURCE FOR THE CITY OF BROOMFIELD, AND IS THEN RETURNED TO THE NATURAL DRAINAGE CHANNEL. DUE TO THE EPHEMERAL NATURE OF SOUTH WALNUT CREEK, NO IMPACT TO WETLANDS IS ANTICIPATED AS A RESULT OF THE PROPOSED ACTION TO TREAT SURFACE WATER.

ALTHOUGH NO LONG-TERM IMPACT TO WETLANDS IS ANTICIPATED, IT IS POSSIBLE THAT CONSTRUCTION ACTIVITIES COULD ADVERSELY AFFECT A FEW WETLANDS PLANTS DURING DITCH MODIFICATIONS OR SUMP INSTALLATION. REPLACEMENT OF ANY DESTROYED WETLAND PLANTS WILL FOLLOW THE COMPLETION OF CONSTRUCTION, RESULTING IN NO NET IMPACT TO WETLANDS AT THE RFP.

7.4 ARCHAEOLOGY AND HISTORIC SITES

THE 903 PAD, MOUND AND EAST TRENCHES AREAS HAVE BEEN HIGHLY DISTURBED OVER A NUMBER OF YEARS. DUE TO THIS DISTURBANCE AND THE TOPOGRAPHIC

POSITION OF THE SUBJECT AREA, THE STATE OFFICE OF ARCHAEOLOGY AND HISTORIC PRESERVATION HAS DETERMINED THAT THIS ACTION WILL NOT IMPACT CULTURAL RESOURCES (BURNEY, 1989).

AN ARCHAEOLOGICAL AND HISTORICAL SURVEY OF THE RFP WAS CONDUCTED BETWEEN JULY 18 AND AUGUST 22, 1988, WHICH DETERMINED TWO SITES HAVE POTENTIAL ELIGIBILITY TO THE NATIONAL REGISTER OF HISTORIC PLACES. HOWEVER, INSUFFICIENT INFORMATION CURRENTLY EXISTS TO MAKE THIS DETERMINATION. THESE TWO SITES ARE LOCATED NORTHWEST AND SOUTHWEST OF THE INVESTIGATION AREA, AND WILL NOT BE DISTURBED BY THE PROPOSED ACTION (BURNEY, 1989).

7.5 SHORT- AND LONG-TERM LAND PRODUCTIVITY

LAND WITHIN OU 2 IS CURRENTLY UNDEVELOPED AND WILL REMAIN SO FOR THE FORESEEABLE FUTURE AS PART OF THE ROCKY FLATS PLANT. OU 2 LIES WITHIN THE ROCKY FLATS PLANT SECURITY BOUNDARIES AND IS NOT ACCESSIBLE TO THE GENERAL PUBLIC.

7.6 PERSONNEL EXPOSURES - ANALYSIS METHODOLOGY

THE EFFECTS OF PERSONNEL EXPOSURES TO HAZARDOUS CHEMICALS HAVE BEEN ESTIMATED IN TERMS OF INCREASED RISKS OF EITHER DEVELOPING CANCER (CARCINOGENIC RISK) OR SOME OTHER ADVERSE HEALTH EFFECT DUE TO THE EXPOSURE (NONCARCINOGENIC RISK). ANALYSES WERE DONE SEPARATELY FOR THOSE DIRECTLY INVOLVED IN REMEDIAL ACTIONS (WORKERS), OTHER RFP PERSONNEL NOT DIRECTLY INVOLVED IN REMEDIAL ACTIONS (SITE EMPLOYEES), AND OFF-SITE INDIVIDUALS (GENERAL PUBLIC). DETAILED RISK ASSESSMENT CALCULATIONS ARE PROVIDED IN APPENDIX G.

AIRBORNE CONTAMINANT CONCENTRATIONS AT THE RECEPTOR (SITE EMPLOYEES,

GENERAL PUBLIC) LOCATIONS WERE ESTIMATED USING THE GAUSSIAN PLUME EQUATION OF PASQUILL AS MODIFIED BY GIFFORD (1961) FOR GROUND-LEVEL CONCENTRATIONS AT THE CENTERLINE OF THE PLUME. ASSUMING A GROUND-LEVEL RELEASE, THE EQUATION BECOMES:

%/Q = (% (SIGMA(Y)) (SIGNA(Z)) U)(-1)

WHERE:

% = AIR CONCENTRATION, MG/M3 OR CI/M3
Q = EMISSION RATE, MG/SEC OR CI/SEC
U = WIND SPEED, M/SEC
SIGMA(Y) = HORIZONTAL DISPERSION COEFFICIENT, M
SIGMA(Z) = VERTICAL DISPERSION COEFFICIENT, M

THE DISPERSION COEFFICIENT VALUE IS A FUNCTION OF THE DOWNWIND DISTANCE, WHETHER THE CONTAMINANT EMISSION IS A LONG-TERM (CONSTRUCTION, OPERATION) OR A SHORT-TERM (ACCIDENT SOURCE), AND THE PREVAILING METEOROLOGICAL CONDITIONS (PASQUILL STABILITY CLASS). LONG-TERM DISPERSION COEFFICIENTS WERE CALCULATED USING BRIGGS FORMULAS FOR OPEN COUNTRY CONDITIONS (GIFFORD, 1976), PASQUILL STABILITY CLASS D (PREVALENT CONDITION PER RFP EIS), AND AVERAGE ANNUAL DOWNWIND DIRECTIONAL FREQUENCIES. SHORT-TERM DISPERSION COEFFICIENTS WERE CALCULATED USING FORMULAS DEVELOPED BY SLADE (1968), PASQUILL STABILITY CLASS F, AND NO WIND DIRECTIONAL AVERAGING.

THE TOXICITY ASSESSMENT (INTAKE AND RISK) FOR CARCINOGENIC AND

NONCARCINOGENIC EFFECTS OF CHEMICALS WAS PERFORMED IN ACCORDANCE WITH THE EPA'S RISK ASSESSMENT GUIDANCE FOR SUPERFUND SITES (EPA, 1989). EPA'S INTEGRATED RISK INFORMATION SYSTEM (IRIS) WAS UTILIZED AS THE PRIMARY SOURCE FOR TOXICITY INFORMATION (RFDS AND SLOPE FACTORS). EPA'S HEALTH EFFECTS ASSESSMENT SUMMARY TABLES FOR THE FOURTH QUARTER OF FY 1990 (EPA, 1990B) WERE USED AS A SECONDARY SOURCE OF INFORMATION. FOR ORGANIC CHEMICALS, INHALATION TOXICITY VALUES (RFDS, SLOPE FACTORS) WERE ESTIMATED USING THE ORAL PATHWAY VALUES IN THOSE INSTANCES WHERE INHALATION VALUES WERE NOT AVAILABLE. IT WOULD BE EXPECTED THAT THE TOXICITY VALUES FOR BOTH PATHWAYS WOULD BE SIMILAR DUE TO SIMILAR ABSORPTION EFFICIENCIES FOR ORGANIC MATERIALS.

ESTIMATES OF CARCINOGENIC RISKS WERE CALCULATED FOR EACH OF THE ORGANIC CHEMICALS IDENTIFIED IN TABLE 4-1, AND THE INDIVIDUAL RISKS SUMMED FOR A TOTAL CARCINOGENIC RISK. THE CARCINOGENIC RISKS ARE CONSIDERED TO BE CUMULATIVE FOR THE ENTIRE PERIOD OF EXPOSURE AND THE CALCULATIONS YIELD AN ESTIMATE FOR THE LIFETIME INCREASED RISK OF CANCER.

NONCARCINOGENIC RISKS ARE CONSIDERED "THRESHOLD" EVENTS. THAT IS, NO EFFECT IS OBSERVED BELOW A GIVEN EXPOSURE. THE POTENTIAL FOR INCREASED HEALTH EFFECTS ARE EXPRESSED IN TERMS OF THE NON-CANCER HAZARD QUOTIENT, WHICH EQUALS THE EXPOSURE LEVEL DIVIDED BY THE REFERENCE DOSE (NONCARCINOGENIC TOXICITY VALUE). THE EPA METHODOLOGY ASSUMES THAT A

QUOTIENT VALUE OF LESS THAN ONE IS UNLIKELY TO RESULT IN ADVERSE HEALTH EFFECTS, EVEN FOR SENSITIVE POPULATION GROUPS. GENERALLY, THE GREATER THE QUOTIENT VALUE ABOVE UNITY, THE GREATER THE LEVEL OF CONCERN. CHRONIC OR SUBCHRONIC REFERENCE DOSE VALUES WERE UTILIZED IN THE NON-CANCER HAZARD QUOTIENT CALCULATION, DEPENDING ON THE POTENTIAL DURATION OF THE EXPOSURE.

EXPOSURES TO SITE EMPLOYEES AND MEMBERS OF THE GENERAL PUBLIC WERE ANALYZED BASED ON A SINGLE, HYPOTHETICAL INDIVIDUAL FOR EACH EXPOSURE CATEGORY. SITE EMPLOYEES WERE ASSUMED TO BE ASSIGNED, EIGHT HOURS A DAY FOR THE DURATION OF THE RELEASE, TO WHATEVER BUILDING WOULD RECEIVE THE GREATEST AVERAGE AIRBORNE EXPOSURE. FOR THE PROPOSED ACTION, THE NEAREST OCCUPIED LOCATIONS RESULTING IN THE GREATEST EXPOSURE TO OTHER SITE PERSONNEL INCLUDE BUILDING 988, 995, AND THE GATE 9 GUARD POST (INNER GUARD POST ON EAST ACCESS ROAD). THE ANALYSIS OF THE IMPACT TO THE GENERAL PUBLIC ASSUMED A SINGLE INDIVIDUAL WOULD REMAIN AT THE POINT OF HIGHEST EXPOSURE (DUE EAST AT PLANT BOUNDARY) ACCESSIBLE TO THE GENERAL PUBLIC FOR EACH PATHWAY, TWENTY-FOUR HOURS PER DAY, FOR THE ENTIRE DURATION OF THE RELEASE. THESE CALCULATIONS PROVIDE AN UPPER BOUND FOR THE INCREASED RISKS TO AN INDIVIDUAL FROM EACH OF THESE GROUPS. DURING THE REMEDIAL ACTION, IT IS UNLIKELY THAT ANY WORKER, SITE EMPLOYEE, OR MEMBER OF THE GENERAL PUBLIC WOULD EXCEED OR EVEN APPROACH THE RISKS ESTIMATED FOR THEIR RESPECTIVE GROUP.

IN CALCULATIONS OF THE ESTIMATED INCREASED RISKS TO MEMBERS OF THE GENERAL PUBLIC FROM HAZARDOUS CHEMICALS, THE IMPACTS ON INFANTS AND YOUNG CHILDREN WERE CALCULATED SEPARATELY FROM THOSE ON ADULT MEMBERS OF THE POPULATION. INFANTS AND YOUNG CHILDREN DIFFER FROM ADULTS IN THE RATE OF UPTAKE OF THE HAZARDOUS CHEMICALS AND IN BODY WEIGHT. BOTH OF THESE FACTORS INFLUENCE THE CALCULATIONS OF INCREASED RISK. TO ASSESS NONCARCINOGENIC RISKS, NON-CANCER HAZARD QUOTIENTS WERE ESTIMATED FOR BOTH CHILDREN AND ADULTS. THE NUMBERS QUOTED IN THE TEXT OF THIS DOCUMENT ARE THOSE FOR THE GROUP WITH THE GREATEST INCREASED RISK OR CONCERN. CARCINOGENIC RISKS TO A MEMBER OF THE GENERAL PUBLIC WERE

ESTIMATED ASSUMING EXPOSURE FOR THE ENTIRE LENGTH OF THE RELEASE, WHICH WAS CONSERVATIVELY ASSUMED TO BE THIRTY YEARS. TWO EXPOSURE CATEGORIES WERE CONSIDERED: 1) THE MEMBER OF THE PUBLIC IS ALREADY AN ADULT WHEN THE PROJECT STARTS; AND 2) THE INDIVIDUAL IS ASSUMED TO BE A CHILD FOR THE FIRST FIVE YEARS OF REMEDIAL ACTION AND AN ADULT FOR THE REMAINING 25 YEARS. THE NUMBERS IN THE REPORT REPRESENT WHICHEVER ANALYSIS YIELDED THE HIGHEST INCREASED RISK OF CANCER.

THE INTAKE OF RADIOACTIVE MATERIALS HAS BEEN ASSESSED BY CALCULATING TOTAL INTAKE BY INDIVIDUALS AND CONVERTING THAT TO COMMITTED EFFECTIVE DOSE EQUIVALENT (CEDE) USING THE EXPOSURE-TO-DOSE CONVERSION FACTORS FOR INHALATION (TABLE 2.1 OF EPA, 1988). INTERNAL DOSE CONVERSION FACTORS FOR CALCULATION OF DOSE TO THE PUBLIC, PART 2 (DOE, 1988A), WAS USED TO ASSESS DOSE TO THE PUBLIC. THE CALCULATED EXPOSURE VALUES ARE THEN COMPARED WITH THE APPLICABLE DOE LIMITS FOR EACH RECEPTOR GROUP. DOE ORDER 5480.11 (DOE, 1988B) ESTABLISHES A LIMIT OF 5 REM (EFFECTIVE DOSE

EQUIVALENT) PER YEAR FOR OCCUPATIONAL WORKERS. DOE ORDER 5400.5 (DOE, 1990B) INCORPORATES A CLEAN AIR ACT (CAA) LIMIT OF 10 MREM (EFFECTIVE DOSE EQUIVALENT) PER YEAR FOR MEMBERS OF THE PUBLIC FROM ROUTINE AIRBORNE EMISSIONS AND A DOSE LIMIT OF 100 MREM PER YEAR FROM ALL EXPOSURE MODES.

7.7 PERSONNEL EXPOSURES - ROUTINE OPERATIONS

7.7.1 WORKER EXPOSURE RISKS

WORKERS INVOLVED IN THE INSTALLATION OF COLLECTION FACILITIES AND THOSE INVOLVED IN OPERATION OF THE FACILITIES ASSOCIATED WITH THE REMEDIAL ACTION MAY EXPERIENCE INCREASED RISKS THROUGH SEVERAL PATHWAYS:

1. AIRBORNE EXPOSURE TO VOCS NEAR CONSTRUCTION ACTIVITIES, EQUIPMENT INSTALLATION, OR WITHIN THE FACILITY.

2. DERMAL EXPOSURE TO ORGANIC AND INORGANIC CHEMICALS OR RADIOACTIVE MATERIALS, ESPECIALLY DURING CONSTRUCTION ACTIVITIES.

3. INHALATION OF ORGANIC CHEMICALS, INORGANIC CHEMICALS, OR RADIOACTIVE MATERIALS ON FUGITIVE DUST, ESPECIALLY THOSE GENERATED DURING CONSTRUCTION ACTIVITIES.

AIRBORNE EXPOSURES TO VOCS

IT IS PROPOSED THAT THE TREATMENT FACILITY BE LOCATED IN THE EAST TRENCHES AREA, NORTHWEST OF IHSS-110. ASSOCIATED PIPING AND UTILITIES WILL BE LOCATED, TO THE DEGREE POSSIBLE, TO AVOID SOILS CONTAMINATED WITH VOCS. THERE WILL BE MONITORING TO ASSESS POSSIBLE EXPOSURES TO VOCS DURING THESE CONSTRUCTION ACTIVITIES. PROTECTIVE MEASURES APPROPRIATE FOR THE LEVEL OF VOCS DETECTED WILL BE SPECIFIED IN THE SSHSP TO PROTECT THE WORKERS. THE POTENTIAL FOR CHRONIC OR ROUTINE EXPOSURE OF WORKERS TO VOCS RESULTING FROM OPERATIONS AND MAINTENANCE TASKS WILL BE SMALL. OSA PROCEDURES WILL BE ESTABLISHED TO CONTROL POTENTIAL HAZARDS TO WORKERS.

THE TREATMENT FACILITY TRAILERS WILL BE VENTILATED TO PREVENT THE BUILDUP OF VOC VAPORS IN THE WORK ENVIRONMENT. THE PROCESS REACTION, CONCENTRATION, AND NEUTRALIZATION TANKS WILL BE EQUIPPED WITH HINGED COVERS TO MINIMIZE THE INTRODUCTION OF VOC VAPORS INTO THE WORK AREA.

THE FILTRATION, DEWATERING, AND CARBON ADSORPTION UNITS ARE CLOSED SYSTEMS AND THUS WILL NOT ACT AS VOC VAPOR SOURCES. PERIODIC (EVERY 1 TO 3 DAYS) REMOVAL OF DEWATERED SOLIDS (SLUDGE) FROM THE DEWATERING EQUIPMENT WILL BE NECESSARY. THIS WILL REQUIRE OPENING OF THE FILTER PRESS HOUSING AND POTENTIAL SHORT-TERM EXPOSURE TO VOC VAPORS. FACILITY VENTILATION AND OSA PROCEDURES WILL PROVIDE APPROPRIATE PERSONNEL PROTECTION. THE WET CONSISTENCY OF THE SLUDGE WILL PRECLUDE POTENTIAL AEROSOLIZATION OF RADIOACTIVE PARTICULATES AND ASSOCIATED EXPOSURE FROM INHALATION. THE DEWATERED SOLIDS WILL BE HANDLED AS A LOW-LEVEL MIXED

WASTE. OUTDOOR OPERATIONAL TASKS, SUCH AS MAINTENANCE OF THE SURFACE WATER COLLECTION SYSTEM, WILL BE PERFORMED IN ACCORDANCE WITH THE APPROPRIATE OSA.

ACTIVITIES THAT MIGHT LEAD TO NONROUTINE EXPOSURES, SUCH AS OPENING TANKS OR OTHER MAINTENANCE OPERATIONS, WILL BE OF SHORT DURATION AND WILL NOT LEAD TO CHRONIC EXPOSURES. MONITORING THESE ACTIVITIES WILL BE NECESSARY, HOWEVER, TO DETERMINE THAT ADEQUATE PROTECTIVE MEASURES WERE USED TO ASSURE THAT WORKERS WERE NOT EXPOSED TO VOC LEVELS EXCEEDING APPROPRIATE LIMITS FOR THE INDIVIDUAL CHEMICALS.

DERMAL EXPOSURES

AS WITH AIRBORNE EXPOSURES, POTENTIAL DERMAL EXPOSURES WILL BE CONTROLLED WITH THE IMPLEMENTATION OF SSHSP AND OSA PROCEDURES. POTENTIAL LEVELS OF PROTECTION FROM SPLASHING AND CONTACT WITH CONTAMINANTS INCLUDE THE USE OF GLOVES, PROTECTIVE CLOTHING, GOGGLES, AND HOODS.

DURING CONSTRUCTION ACTIVITIES FOR THE PROPOSED ACTION, THERE WILL BE LITTLE OR NO POTENTIAL FOR DERMAL CONTACT WITH SOIL CONTAMINATED WITH VOCS. THE TREATMENT FACILITY WILL BE CONSTRUCTED IN THE EAST TRENCHES AREA, NORTHWEST OF IHSS-110, WHERE VOC CONTAMINATION LEVELS ARE ANTICIPATED TO BE LOW. THE PIPING FOR THE WATER TREATMENT FACILITY WILL BE ROUTED THROUGH UNCONTAMINATED SOIL TO THE EXTENT POSSIBLE. ANY EXCAVATED SOIL FROM DESIGNATED IHSSS WILL BE TREATED AS A RCRA MIXED WASTE UNTIL DETERMINED OTHERWISE. INORGANIC CHEMICALS AND RADIOACTIVE MATERIALS IDENTIFIED IN THE WORK AREAS ARE NOT READILY ABSORBED THROUGH THE SKIN AND WOULD RESULT IN A NEGLIGIBLE EXPOSURE PATHWAY.

PERSONAL PROTECTIVE MEASURES MAY BE NECESSARY DURING SOME ROUTINE OPERATIONS ACTIVITIES WHERE THERE IS A POTENTIAL FOR CONTACT WITH CONTAMINATED WATER (E.G., ROUTINE WATER SAMPLING OR SOLIDS REMOVAL IN THE TREATMENT FACILITY). IF SUCH MEASURES ARE NECESSARY FOR THE PROTECTION OF THE WORKERS, THEY WILL BE SPECIFIED IN THE OSA FOR THOSE ACTIVITIES.

INHALATION OF FUGITIVE DUST

FUGITIVE DUSTS ARE LIKELY TO BE GENERATED DURING CONSTRUCTION ACTIVITIES FOR THE WATER COLLECTION AND TREATMENT FACILITIES. THE PHASE II SAMPLING PLAN (EG&G, 1990A) INCLUDES SOIL SAMPLING IN THE AREAS OF INTEREST, BUT THE RESULTS ARE NOT YET AVAILABLE. FOR THIS REASON, THE SURFACE SOIL CONDITIONS HAVE BEEN ESTIMATED USING AVAILABLE SOIL SAMPLES FROM THE PHASE I RI/FS (ROCKWELL, 1987A). WHERE SOIL SAMPLES WERE NOT AVAILABLE, THE NEAREST SOIL SAMPLES LOCATED BETWEEN THE AREA OF INTEREST AND THE MOST LIKELY SOURCE OF CONTAMINATION HAVE BEEN USED.

THE SOIL SAMPLE RESULTS INDICATE THAT THE ONLY ORGANIC CHEMICAL OF CONCERN IN SOIL ABOVE THE WATER TABLE IS BIS (2-ETHYLHEXYL)PHTHALATE.

ACETONE AND METHYLENE CHLORIDE WERE REPORTED BUT ARE SUSPECTED TO BE LABORATORY CONTAMINANT ARTIFACTS. CONSEQUENTLY, IT IS THE ONLY SIGNIFICANT ORGANIC CHEMICAL CONTRIBUTING TO CARCINOGENIC AND NONCARCINOGENIC EFFECTS FROM THE FUGITIVE DUST PATHWAY. THE RADIOACTIVE CONTAMINANTS OF CONCERN FROM THE FUGITIVE DUST PATHWAY INCLUDE PLUTONIUM AND AMERICIUM. THE CONTAMINANT LEVELS IN THE SURFACE SOILS FOR CS-59, CS-61, CS-132, AND THE TREATMENT FACILITY ARE BASED ON DATA FROM THE NEAREST AVAILABLE BOREHOLE.

DUST CONTROL MEASURES WILL BE SPECIFIED IN THE SSHSP TO LIMIT INHALATION EXPOSURES TO WORKERS INVOLVED IN CONSTRUCTION ACTIVITIES. THESE MEASURES WILL BE DERIVED FROM THE PPCD. EVEN IF WORKERS WERE TO BE EXPOSED TO THE MAXIMUM DUST LOADING PERMITTED BY OSHA REGULATIONS FOR NUISANCE DUST DURING THE ENTIRE PERIOD OF CONSTRUCTION ACTIVITIES, THE EFFECTS OF EITHER FUGITIVE RADIOACTIVE MATERIAL OR PHTHALATES WOULD BE INSIGNIFICANT.

THE CONTAMINATED SURFACE WATER COLLECTION STATIONS WILL HAVE SURFACE PIPING ROUTED TO THE TREATMENT FACILITY. CONSEQUENTLY, TRANSFER OF CONTAMINATED SURFACE WATER BY TANKER TRUCK WILL NOT BE REQUIRED AND WILL NOT RESULT IN A FUGITIVE DUST SOURCE TERM DURING OPERATIONS. OCCASIONAL TRAVEL TO THE SURFACE WATER COLLECTION STATIONS WILL BE REQUIRED FOR MAINTENANCE OR SURVEILLANCE PURPOSES. WHILE SOME FUGITIVE DUST MAY BE GENERATED IN THE WAKE OF THE VEHICLE, IT IS NOT EXPECTED TO BE A SIGNIFICANT EXPOSURE PATHWAY FOR THE VEHICLE OPERATOR OR OTHER CONSTRUCTION PERSONNEL.

7.7.2 SITE EMPLOYEE EXPOSURE RISKS

OTHER WORKERS AT THE RFP SITE COULD BE EXPOSED TO LOW LEVELS OF VOC VAPORS RELEASED DURING NORMAL OPERATION AND TO FUGITIVE DUST GENERATED DURING INSTALLATION AND OPERATION OF THE FACILITIES ASSOCIATED WITH THE PROPOSED ACTION.

ALTHOUGH THE VENT ON THE FEED EQUALIZATION TANK (SEE FIGURE 6-1) ON THE WATER TREATMENT FACILITY WILL HAVE AN ACTIVATED CHARCOAL FILTER ATTACHED, IN ORDER TO ESTIMATE AN UPPER BOUND TO PERSONNEL EXPOSURE, A CALCULATION WAS PERFORMED TO DETERMINE THE POTENTIAL VOC RELEASES FROM THE VENT WITHOUT A FILTER ATTACHED. SINCE THAT TANK IS THE LARGEST SINGLE TANK IN WHICH UNTREATED WATER IS COLLECTED, IT WAS CHOSEN AS THE TANK WHICH, IF UNFILTERED, COULD LEAD TO THE GREATEST EXPOSURES TO OTHER SITE EMPLOYEES OR THE PUBLIC. ANY OTHER TANKS, SUMPS, OR PUMP VENTS WOULD LEAD TO LOWER EXPOSURES AND LOWER RISKS. IN THE CALCULATION, IT WAS ASSUMED THAT THE LIQUID IN THE TANK WAS AT THE CONTAMINATION LEVELS LISTED IN TABLE 4-1 AND THAT THE VAPOR IN THE TANKS HAD REACHED EQUILIBRIUM WITH THE LIQUIDS. IT WAS FURTHER ASSUMED THAT THE VAPORS ARE DISPLACED BY IN-FLOWING LIQUIDS AT AN AVERAGE RATE OF 60 GPM, THE DESIGN PROCESSING RATE. THAT IS, IT IS ASSUMED THAT THE AVERAGE LIQUID INFLOW MUST EQUAL THE PROCESSING FLOWRATE, BUT NO CREDIT WAS TAKEN FOR WATER BEING REMOVED FROM THE TANK. UNDER THESE CIRCUMSTANCES, THE

MAXIMUM TOTAL CANCER RISK AND TOTAL NON-CANCER HAZARD QUOTIENT WOULD BE

VERY LOW.

THERE WILL BE DUST GENERATED DURING THE CONSTRUCTION OF THE WATER COLLECTION FACILITIES AS WELL AS THE WATER TREATMENT FACILITY. ALTHOUGH DUST SUPPRESSION MEASURES WILL BE IMPLEMENTED IN ACCORDANCE WITH THE PPCD AND SSHSP, THE FOLLOWING CONSERVATIVE ANALYSIS, WHICH ASSUMES NO DUST SUPPRESSION MEASURES AND HIGH ESTIMATES OF AREAL DISTURBANCE AND CONSTRUCTION TIME, HAS BEEN USED TO ESTIMATE HEALTH RISKS FROM DUST GENERATION. THE DUST GENERATION RATE WAS ESTIMATED USING THE CONSTRUCTION GENERATION RATE OF 1.2 TONS PER ACRE PER MONTH (AVERAGE SOIL MOISTURE CONDITIONS) FROM AP-42 (EPA, 1985). AP-42 IS AN EPA DOCUMENT FOR ESTIMATING SOURCE TERMS FOR AIR POLLUTANT EMISSIONS. IT WAS ASSUMED THAT THE PROJECT WOULD CREATE DUST OVER AN AVERAGE AREA OF ONE ACRE FOR TWO MONTHS. THIS MULTIPLICATION LED TO A CALCULATED AVERAGE GENERATION RATE OF 4.2 X (10-4) KG OF DUST PER SECOND. TO BE CONSERVATIVE IN CALCULATING THE EXPOSURE OF SITE EMPLOYEES, IT WAS ASSUMED THAT ALL THE DUST WAS GENERATED AT THE SURFACE WATER COLLECTION STATIONS, SINCE THIS WOULD PRODUCE THE MAXIMUM EXPOSURE TO PERSONNEL AT BUILDINGS 988 AND 995. THE APPROACH UTILIZED TO ESTIMATE SURFACE CONTAMINATION LEVELS CONTRIBUTING TO FUGITIVE DUST HAS BEEN DISCUSSED IN THE FUGITIVE DUST PORTION OF SECTION 7.7.1 OF THIS REPORT. USING A WIND DIRECTION WEIGHTED DISPERSION FACTOR (/Q) FROM CS-134 TO BUILDINGS 988 AND 995 OF 2.43 X (10-4) SECONDS PER CUBIC METER, IT IS ESTIMATED THAT AN INDIVIDUAL ASSIGNED TO THE BUILDINGS FOR THE FULL SIXTY-DAY DURATION OF THE CONSTRUCTION ACTIVITIES WOULD RECEIVE A MAXIMUM DOSE OF 0.4 MREM CEDE FROM RADIOACTIVE MATERIALS IN THE FUGITIVE DUST. THE CORRESPONDING INCREMENTAL CANCER RISK AND NON-CANCER HAZARD QUOTIENT DUE TO THE PRESENCE OF PHTHALATES AND METALS IN THE DUST WERE CALCULATED TO EQUAL 3 X (10-6) AND 4 X (10-3), RESPECTIVELY.

AS NOTED PREVIOUSLY, THE ONLY POTENTIAL FUGITIVE DUST SOURCE TERM ASSOCIATED WITH INTERIM ACTION OPERATION IS OCCASIONAL TRAVEL TO THE SURFACE WATER COLLECTION STATIONS FOR MAINTENANCE OR SURVEILLANCE PURPOSES. DUE TO THE INFREQUENT NATURE AND SHORT DURATION OF ANY TRAVEL TO THE COLLECTION STATIONS, CHRONIC EXPOSURES TO OTHER SITE PERSONNEL FROM FUGITIVE DUST ARE NOT ANTICIPATED.

7.7.3 RISKS TO MEMBERS OF THE PUBLIC (1)

MEMBERS OF THE PUBLIC COULD BE EXPOSED TO THE SAME SOURCES OF RISK AS DESCRIBED IN THE PREVIOUS SECTION FOR OTHER RFP SITE WORKERS. THE AIRBORNE CONCENTRATION OF THE FUGITIVE DUST WOULD BE LESS FOR MEMBERS OF THE PUBLIC BECAUSE OF THE GREATER DISPERSION DISTANCE FROM THE SOURCE.

THE PUBLIC MAY BE EXPOSED TO FUGITIVE DUST CONTAINING PHTHALATES, AND PLUTONIUM GENERATED DURING THE CONSTRUCTION PHASE OF THIS ACTION. THE MAXIMUM DOSE TO A MEMBER OF THE GENERAL PUBLIC FROM RADIOACTIVE CONTAMINANTS PRESENT IN DUST GENERATED DURING CONSTRUCTION ACTIVITIES WOULD BE ABOUT 2 X (10-3) MREM CEDE. THIS IS VERY LOW AND WELL WITHIN

1

AIRBORNE EXPOSURE LIMITS OF 10 MREM PER YEAR TO ANY MEMBER OF THE GENERAL PUBLIC (DOE, 1990B). THE MAXIMUM INCREMENTAL CANCER RISK TO A MEMBER OF THE PUBLIC DUE TO PHTHALATE AND METAL CONTAMINATION WITHIN THE DUST WAS CALCULATED TO BE NEGLIGIBLE DURING CONSTRUCTION, WITH A VALUE OF 6 X (10-8). THE CORRESPONDING NON-CANCER HAZARD QUOTIENT WAS CALCULATED TO EQUAL 8 X (10-5) FOR CONSTRUCTION ACTIVITIES. AS DISCUSSED IN SECTION 7.7.2, SOME FUGITIVE DUST MAY BE GENERATED IN THE WAKE OF VEHICLES TRAVELING TO THE WATER COLLECTION STATIONS DURING

NORMAL OPERATIONS FOR MAINTENANCE OR SURVEILLANCE ACTIVITIES. DUE TO THE INFREQUENT NATURE AND SHORT DURATION OF THIS TRAVEL AND THE DISTANCE TO THE PLANT BOUNDARY (APPROXIMATELY 1 MILE), ANY PUBLIC EXPOSURE IS EXPECTED TO BE INSIGNIFICANT.

AS DISCUSSED IN SECTION 7.7.2, POTENTIAL VOC RELEASES FROM THE FEED EQUALIZATION TANK WERE ANALYZED TO PROVIDE AN UPPER BOUND ON THE RISKS FROM RELEASES FROM OTHER, UNFILTERED TANKS. USING THE SAME ASSUMPTIONS AS DESCRIBED IN SECTION 7.7.2, THE MAXIMUM CANCER RISK AND NON-CANCER HAZARD QUOTIENT FOR A MEMBER OF THE PUBLIC WOULD BE VERY LOW.

(1) THROUGHOUT THIS REPORT, THE TERM "GENERAL PUBLIC" HAS A SPECIAL AND VERY RESTRICTED MEANING. IN ORDER TO ESTIMATE THE MAXIMUM EXPOSURE OR RISK TO ANY INDIVIDUAL OUTSIDE OF THE RFP SITE, ALL ESTIMATES ARE BASED ON EXPOSURE TO A PERSON AT THE SITE BOUNDARY LOCATION HAVING THE HIGHEST AVERAGE AIRBORNE CONCENTRATION WHO REMAINS THERE FOR 24 HOURS EACH DAY, 365 DAYS EACH YEAR, FOR THE DURATION OF THE OPERATION OR THE REMEDIAL ACTION.

7.8 PERSONNEL EXPOSURE - ACCIDENT

ANY ACCIDENTS THAT MAY OCCUR DURING THE CONSTRUCTION PHASE OF THE PROPOSED ACTION ARE THOSE TYPICAL OF SMALL EXCAVATION OR CONSTRUCTION ACTIVITIES. THE SSHSP WILL IDENTIFY APPROPRIATE PRECAUTIONS AND RESPONSIBILITIES FOR EACH JOB. WORKERS WILL BE FAMILIAR WITH THE SSHSP AND A COPY OF IT WILL BE AVAILABLE AT THE WORK SITE. NO CREDIBLE ACCIDENT DURING CONSTRUCTION WOULD LEAD TO EXPOSURE OF EITHER WORKERS, SITE EMPLOYEES, OR MEMBERS OF THE PUBLIC TO LEVELS GREATER THAN THOSE RESULTING FROM THE SEVERE ACCIDENT CASE ANALYZED BELOW.

DURING OPERATION, ACCIDENTS THAT COULD IMPACT EITHER WORKERS OR MEMBERS OF THE PUBLIC WOULD INCLUDE FIRES OR MAJOR SPILLS OF CONTAMINATED MATERIAL. SPILLS OF UNTREATED WATER WITHIN THE TREATMENT FACILITY WOULD CREATE THE POTENTIAL FOR SHORT DURATION AIRBORNE VOCS. UPTAKE OF CONTAMINANTS BY WORKERS INVOLVED IN THE CLEANUP WOULD BE CONTROLLED BY FOLLOWING SAFETY PRECAUTIONS SPECIFIED IN THE OSA. ANY AIRBORNE VOC RELEASES THROUGH VENTILATION SYSTEMS THAT COULD LEAD TO EXPOSURES OF OTHER RFP EMPLOYEES (SITE EMPLOYEES) OR THE GENERAL PUBLIC WOULD BE LESS THAN THE TANK RUPTURE DISCUSSED LATER IN THIS SECTION.

THE INITIATION AND PROPAGATION OF FIRE WITHIN THE TREATMENT FACILITY IS A CREDIBLE ACCIDENT. THE FACILITY TRAILERS ARE EQUIPPED WITH CHEMICAL

FIRE EXTINGUISHERS; HOWEVER, THE TRAILERS WILL NOT NORMALLY BE OCCUPIED ONCE OPERATIONS BECOME ROUTINE. ANY VOC RELEASES WOULD BE BOUNDED BY THE SEVERE ACCIDENT CASE SINCE CONCENTRATED VOCS WOULD BE CONTAINED WITHIN THE ACTIVATED CHARCOAL COLUMNS WHICH ARE CLOSED COMPONENTS AND FILLED WITH WATER. SOLIDS WHICH ARE IN THE FILTER PRESS HOUSING OR WHICH HAVE BEEN REMOVED AND PLACED IN METAL CONTAINERS CONSTITUTE A POTENTIAL RADIOACTIVE MATERIAL SOURCE TERM. A FIRE WOULD HAVE TO BOTH DRY OUT AND AEROSOLIZE THE SOLIDS AS WELL AS BREACH THE METAL CONTAINMENT TO RESULT IN A RADIOACTIVE RELEASE. SINCE THE SOLIDS ARE INORGANIC AND IN A SLUDGE FORM CONTAINING 60 TO 70 PERCENT WATER AND ARE WITHIN METAL CONTAINERS, AND THE TRAILER IS THE ONLY MAJOR COMBUSTIBLE MATERIAL PRESENT, IT IS CONCLUDED THAT THE FIRE DURATION AND INTENSITY WOULD BE INSUFFICIENT TO RESULT IN A RADIOACTIVE MATERIAL RELEASE RESULTING IN ANY SIGNIFICANT IMPACTS.

IF ANY WORKERS WERE PRESENT DURING AN ACCIDENT INVOLVING THE RUPTURE OF THE INLET TANK, THE DANGER OF TRAUMATIC INJURY WOULD BE A GREATER CONCERN THAN INTAKE OF HAZARDOUS CHEMICALS OR RADIOACTIVITY. THE RADIOACTIVE MATERIALS PRESENT IN THE WATER ARE NOT VOLATILE, NOR ARE THEY READILY ABSORBED THROUGH THE SKIN, SO THEY DO NOT PRESENT AN INGESTION HAZARD TO THE WORKERS AT THE SCENE OF THE INCIDENT. THE ORGANIC CHEMICALS ARE LOW IN CONCENTRATION AND WOULD NOT VOLATILIZE IMMEDIATELY. THUS, WHILE THE AIRBORNE CONCENTRATION LEVELS NEAR THE TANK WOULD BE HIGHER THAN OFF-SITE OR OTHER ON-SITE LOCATIONS, THE WORKERS WOULD BE AWARE OF THE INCIDENT AND WOULD EITHER EVACUATE OR TAKE PROTECTIVE ACTIONS, THUS LIMITING THEIR TOTAL EXPOSURE TO THE HAZARDOUS MATERIAL.

7.9 COMMITMENT OF RESOURCES

THE SCOPE OF THE PROPOSED IM/IRA IS SMALL AND THE RESOURCES (MATERIAL/HUMAN) FOR CONSTRUCTION AND OPERATION OF THIS SURFACE WATER TREATMENT SYSTEM WILL LIKEWISE BE RELATIVELY SMALL. NO SIGNIFICANT COMMITMENTS OF VALUABLE RESOURCES ARE INVOLVED.

WITH THE EXCEPTION OF THE LAND AREA, ALL OF THE MATERIALS FOR CONSTRUCTION AND OPERATION OF THE WATER TREATMENT SYSTEM WILL BE IRREVOCABLY AND IRRETRIEVABLY COMMITTED TO THE IMPLEMENTATION OF THE REMEDIAL ACTION. MOST OF THESE RESOURCES ARE NORMALLY CONSUMED AT THE PLANT AT A RATE WHICH MAKES THE REQUIREMENTS OF THE REMEDIAL ACTION INSIGNIFICANT. THE WATER PRETREATMENT CHEMICALS AND CLEANING SOLUTIONS ARE ALREADY IN USE AT THE RFP. THE CHEMICALS FOR THE CROSS-FLOW MEMBRANE TREATMENT SYSTEM AND THE CARBON CANISTERS ARE ALL READILY AVAILABLE FROM OFF-SITE SOURCES. PROCESS CHEMICALS, CLEANING AGENTS, AND CARBON WILL ALL BE AVAILABLE WITHIN THE DENVER METROPOLITAN AREA.

7.10 TRANSPORTATION IMPACTS

HUMAN HEALTH IMPACTS NORMALLY INCIDENT TO TRANSPORTATION INCLUDE VEHICLE EMISSIONS IN ADDITION TO POSSIBLE TRAUMATIC INJURIES AND FATALITIES

RESULTING FROM VEHICULAR OPERATIONS.

NORMAL TRANSPORTATION PRODUCES ENGINE EMISSIONS, FUGITIVE DUST GENERATED BY VEHICULAR TRAFFIC ON UNPAVED SURFACES, AND PARTICULATE FROM TIRE WEAR. THE TABLE BELOW PRESENTS AN ESTIMATE OF EMISSION RATES FOR THE OPERATION OF A TYPICAL TRUCK.

TRUCK EMISSIONS RATE

POLLUTANT	EMISSION RATE (LBS/100 GAL. FUEL)
HYDROCARBONS	13.1
NOX	286.0
SOX	31.2
CO	123.5
TSP	17.7

THE IMPACTS ON HEALTH RESULTING FROM TRANSPORTATION DURING THE PROPOSED ACTION INCLUDES THE POTENTIAL FOR BOTH POLLUTION- AND ACCIDENT-RELATED IMPACTS. THE TABLE BELOW PRESENTS ESTIMATES OF RISKS RESULTING FROM TRUCK TRANSPORTATION (RAO, 1982).

HEALTH EFFECTS PER KILOMETER

SOURCE	MODE	* LCFS	INJURIES	FATALITIES
POLLUTANTS	TRUCK	1.0(E-7)		
ACCIDENTS	TRUCK	5.1(E-7)	3.0(E-8)	

* LCF = LATENT CANCER FATALITY

UNCERTAINTIES ARE ASSOCIATED WITH POLLUTION EMISSION RATES AND ATMOSPHERIC DISPERSION BEHAVIOR. TO COMPENSATE FOR THESE UNCERTAINTIES, THE ANALYSIS USED CONSERVATIVE ESTIMATES FOR DETERMINING POLLUTION HEALTH EFFECTS. THE TABULATED ACCIDENT IMPACTS ARE AVERAGE VALUES OVER ALL POPULATION ZONES (URBAN, SUBURBAN, RURAL) AND ARE DERIVED FROM NATIONWIDE DEPARTMENT OF TRANSPORTATION (DOT) STATISTICS.

THE PROPOSED ACTION WILL INVOLVE TRANSPORTATION ACTIVITIES DURING THE CONSTRUCTION PHASE AS WELL AS DURING SUBSEQUENT OPERATIONS. ALL CONSTRUCTION SHIPMENTS ARE ANTICIPATED TO BE MADE MOSTLY BY TRUCK AND WILL ORIGINATE WITHIN THE DENVER METROPOLITAN AREA (WITHIN A 50-MILE RADIUS OF THE PLANT SITE). MATERIALS TO BE BROUGHT ON SITE INCLUDE THE TREATMENT SYSTEMS, STORAGE TANKS, PIPING, CONCRETE, AND ASSOCIATED EQUIPMENT. THE DELIVERY OF THESE MATERIALS WILL REQUIRE SEVERAL TRUCKLOADS OVER THE CONSTRUCTION PERIOD, FOLLOWED BY ROUTINE MAINTENANCE TRAVEL BETWEEN COLLECTION AREAS AND THE TREATMENT FACILITIES (ESTIMATED AT LESS THAN 50 MILES PER WEEK). THE RESULTING TRANSPORTATION IMPACTS WILL BE SMALL AS SEEN FROM THE TABULATED EMISSIONS AND HEALTH EFFECTS

ESTIMATES. TO PLACE TRANSPORTATION IMPACTS TO THE GENERAL PUBLIC IN PERSPECTIVE, IT IS OBSERVED THAT APPROXIMATELY 60,000 ROUND-TRIP TRUCK SHIPMENTS (ONE-WAY DISTANCE OF 50 MILES) WOULD BE REQUIRED TO RESULT IN ONE ADDITIONAL LATENT CANCER FATALITY (LCF). AN AVERAGE OF 210,000 TRUCK SHIPMENTS WOULD BE REQUIRED TO RESULT IN ONE ADDITIONAL TRAUMATIC FATALITY. THE INCREASE IN SITE TRAVEL DURING CONSTRUCTION MAY BE NOTICEABLE BUT WILL BE OF SHORT DURATION. OUTSIDE THE PLANT BOUNDARY, THE INCREASE WILL NOT BE NOTICEABLE.

TREATMENT OF CONTAMINATED SURFACE WATER FROM OU 2 WILL RESULT IN AN INCREMENTAL INCREASE IN SITE PICKUP AND DELIVERIES OF SPENT CARBON COLUMNS AND REPLACEMENT UNITS AND CHEMICALS FOR THE PRETREATMENT OF WATER FOR THE CROSS-FLOW MEMBRANE TREATMENT SYSTEM. DELIVERIES WILL BE SPREAD OUT OVER THE COURSE OF THE YEAR AND WILL BE HANDLED BY ONE OF THE EXISTING PLANT CHEMICAL SUPPLIERS. THE VERY SMALL NUMBER OF SHIPMENTS INVOLVED FOR BOTH THE CARBON COLUMNS AND THE CROSS-FLOW MEMBRANE TREATMENT SYSTEM WILL RESULT IN AN INSIGNIFICANT IMPACT TO HUMAN HEALTH.

OFF-SITE TRANSPORTATION IMPACTS ASSOCIATED WITH THE SHIPMENT OF SOLIDIFIED FILTER SLUDGE TO A MIXED WASTE DISPOSAL SITE, SUCH AS THE NEVADA TEST SITE, WILL BE VERY LOW AS DETERMINED IN DOE (1990B). RELATIVELY LOW CONCENTRATIONS OF CONTAMINANTS, THE PHYSICAL FORM OF THE WASTE, DISPOSAL SITE WASTE ACCEPTANCE CRITERIA, AND COMPLIANCE WITH DOT PACKAGING AND TRANSPORT REQUIREMENTS ALL CONTRIBUTE TO VERY LOW HEALTH EFFECTS FROM INCIDENT-FREE SHIPMENT AND ACCIDENT EVENTS.

OPERATIONAL ACTIVITIES WILL ALSO INCLUDE PERIODIC INSPECTION OF THE COLLECTION SYSTEM TO REMOVE DEBRIS OR OTHER OBSTACLES, AS WELL AS ROUTINE INSPECTION OF THE PIPELINE COLLECTION SYSTEM PROVIDING DIRECT

FEED TO THE WATER TREATMENT FACILITY. THIS WILL REQUIRE VEHICULAR TRAVEL TO EACH COLLECTION STATION AREA, WHICH IS ESTIMATED TO TOTAL 10 TO 15 MILES PER WEEK. IMPACT TO HUMAN HEALTH (LATENT CANCER FATALITIES FROM VEHICULAR POLLUTION) WILL BE NEGLIGIBLE.

7.11 CUMULATIVE IMPACTS

ROUTINE PROCESSING OF THE SURFACE WATER COLLECTED FROM THE SURFACE SEEPS AND DRAINAGES WILL RESULT IN SOME ADDITIONAL SOLID WASTES BEING GENERATED FROM THE SITE. GENERATION OF FILTER PRESS CAKE BY THE CROSS-FLOW MEMBRANE FILTRATION SYSTEM IS ESTIMATED TO BE A MAXIMUM OF 70 CUBIC YARDS ANNUALLY. THE FILTER CAKE WILL BE TREATED ON SITE AND SHIPPED TO THE NEVADA TEST SITE OR SIMILAR FACILITY FOR FINAL DISPOSAL. THE ANNUAL PRODUCTION RATE OF THE SEMISOLID WILL AVERAGE MUCH LOWER. ALL GASEOUS RELEASES WILL BE UNDETECTABLE OFF SITE. NONE OF THE MATERIALS THAT MAY BE RELEASED ARE EXPECTED TO BE CONCENTRATED BY ANY NATURAL PROCESS.

THE DRYING OF THE SEMISOLID SLUDGE WASTE FROM THE TREATMENT SYSTEM WILL REQUIRE AN INCREASE IN PLANT SOLIDIFICATION OPERATIONS TO DRY AND PACKAGE THE WASTE FOR TRANSPORT TO A FINAL DISPOSAL SITE. NEITHER THE

DRYING NOR PACKAGING REQUIREMENT WILL ADD SIGNIFICANTLY COMPARED TO THE CURRENT WORKLOAD OF THE FACILITY. RADIONUCLIDE ACCUMULATION IN THE SLUDGE IS NOT EXPECTED TO EXCEED EXEMPT QUANTITIES BY WEIGHT, SO THAT SHIPMENT OF THE SLUDGE IS NOT EXPECTED TO CAUSE ANY SPECIAL CONCERN OR REQUIRE UNUSUAL CONTROLS.

IT IS ESTIMATED THAT FOUR WORKERS WILL BE INVOLVED IN ROUTINE OPERATION AND MAINTENANCE OF THE SURFACE WATER COLLECTION AND TREATMENT FACILITY. THIS WILL HAVE NEGLIGIBLE IMPACT ON THE WORKLOAD OF PLANT PERSONNEL. IN ROUTINE OPERATIONS, THESE WORKERS WILL NOT BE EXPOSED TO ANY LEVELS OF CHEMICALS OR WASTE STREAM POLLUTANTS THAT WOULD RESTRICT THEM FROM OTHER ASSIGNMENTS AT THE RFP.

CONSTRUCTION ACTIVITIES WILL RESULT IN INCREASED VEHICULAR TRAFFIC, ENGINE EMISSIONS, AND THE NUMBER OF WORKERS. THE NUMBER OF PERSONNEL REQUIRED FOR THE PROPOSED ACTION WILL BE A SMALL INCREASE TO THE ASSUMED YEARLY ADDITIONAL CONSTRUCTION LOADING.

ENVIRONMENTAL EFFECTS OF THE ALTERNATIVES

THE PREFERRED ALTERNATIVE AND THE PROPOSED ACTION FOR THIS INTERIM REMEDIAL ACTION IS TO GATHER CONTAMINATED SURFACE WATER FROM A SERIES OF POINT SOURCES, TRANSFER THE COLLECTED WATER VIA PIPELINE, AND PROCESS THE WATER THROUGH A WATER TREATMENT SYSTEM. THE PREFERRED TREATMENT SYSTEM CONSISTS OF A CROSS-FLOW MEMBRANE TREATMENT SYSTEM FOR REMOVAL OF RADIONUCLIDES AND METALS, FOLLOWED BY A CARBON COLUMN SYSTEM FOR REMOVAL OF VOCS. THE TREATED WATER WILL THEN BE RETURNED TO SOUTH WALNUT CREEK.

SEVERAL ALTERNATIVES TO THE PROPOSED IM/IRA WERE EVALUATED FOR ENVIRONMENTAL EFFECTS. THE ALTERNATIVES INCLUDED: 1) NO ACTION; 2) SURFACE WATER COLLECTION AT POND B-5 AND 3) ION EXCHANGE, GRANULAR MEDIA FILTRATION WITH POLYMER ADDITION, UV PEROXIDE OXIDATION, AND AIR STRIPPING. THE ALTERNATIVE OF SURFACE WATER COLLECTION AT POND B-5 HAS BEEN ELIMINATED BASED ON THE POTENTIAL OF GENERATION OF ADDITIONAL CONTAMINATION AND ADDITIONAL VOLUMES OF WATER REQUIRING TREATMENT (SEE SECTION 4-1). EACH REMAINING ALTERNATIVE IS EVALUATED IN REGARD TO

ENVIRONMENTAL QUALITY, PERSONNEL EXPOSURE AND TRANSPORTATION IMPACTS. FOLLOWING THE ALTERNATIVE EVALUATION, TABLE 8-1 COMPARES THE POTENTIAL IMPACT OF THE PROPOSED ACTION WITH THE ALTERNATIVES.

8.1 ENVIRONMENTAL EFFECTS OF NO ACTION

ALTHOUGH THE NO ACTION ALTERNATIVE IS IN DIRECT CONFLICT WITH THE IAG REACHED AMONG DOE, EPA, AND THE STATE OF COLORADO, IT IS DISCUSSED HEREIN.

8.1.1 ENVIRONMENTAL QUALITY

THE NO ACTION ALTERNATIVE WOULD NOT INVOLVE ANY SHORT-TERM IMPACT TO THE ENVIRONMENT OR THE WORK FORCE/GENERAL POPULATION AND WOULD ELIMINATE THE

NEED FOR OFF-SITE TRANSPORTATION ACTIVITIES. HOWEVER, IT WOULD NOT CONTAIN NOR REMOVE ANY RADIONUCLIDES, VOCS OR INORGANIC CONTAMINANTS. THE NO ACTION ALTERNATIVE WOULD POSE A LONG-TERM RELEASE RISK TO THE GENERAL PUBLIC AND WOULD REQUIRE REMEDIAL ACTIONS IN THE FUTURE.

THE NO ACTION ALTERNATIVE WOULD REQUIRE THAT THE CURRENT QUARTERLY SITE MONITORING BE CONTINUED. BECAUSE THE MONITORING IS A PART OF THE EXISTING PLANT ENVIRONMENTAL MONITORING PROGRAM, THE IMPACT ON PLANT OPERATIONS AND THE SURROUNDING COMMUNITY WOULD BE EFFECTIVELY ZERO. HOWEVER, BECAUSE OFF-SITE MIGRATION MAY OCCUR IN THE FUTURE, THE NO ACTION ALTERNATIVE IS UNACCEPTABLE.

8.1.2 PERSONNEL EXPOSURE

THE NO ACTION ALTERNATIVE WILL HAVE MINIMAL IMPACT ON CURRENT WORKERS AT THE SITE OR AT ADJACENT SITES. WORKERS WOULD STILL BE REQUIRED TO COLLECT QUARTERLY SAMPLING, WHICH WOULD PRESENT NO ADDITIONAL IMPACT ABOVE CURRENT IMPACT LEVELS. THE SOURCES OF HAZARDOUS MATERIALS WOULD NEITHER BE REMOVED NOR CONTROLLED. HOWEVER, THE POSSIBILITY OF RELEASING CONTAMINATED WATER OFF-SITE WOULD INCREASE OVER TIME. THE SITE WOULD THEN BE A SOURCE OF PUBLIC EXPOSURE IN THE LONG TERM.

8.1.3 TRANSPORTATION

SINCE NO REMEDIAL ACTION WOULD OCCUR UNDER THIS ALTERNATIVE, THERE WOULD BE NO ON-SITE OR OFF-SITE TRANSPORTATION ACTIVITIES ASSOCIATED WITH THIS ALTERNATIVE OR RELATED IMPACTS TO WORKERS OR THE GENERAL PUBLIC.

8.2 ENVIRONMENTAL EFFECTS OF ALTERNATIVE 2

8.2.1 ENVIRONMENTAL QUALITY

A VARIETY OF TREATMENT TECHNOLOGIES WERE INVESTIGATED AS ALTERNATIVES TO THE PROPOSED OU 2 IM/IRA. THESE INCLUDED GRANULAR MEDIA FILTRATION WITH POLYMER ADDITION FOR SUSPENDED SOLIDS REMOVAL AND ION EXCHANGE FOR METALS AND RADIONUCLIDE REMOVAL. IN ADDITION, UV PEROXIDE OXIDATION AND AIR STRIPPING WITH OFF-GAS TREATMENT WERE EXAMINED FOR ORGANIC CONTAMINANT REMOVAL. ION EXCHANGE AND UV PEROXIDE SYSTEMS ARE PROPOSED FOR TREATMENT OF CONTAMINATED GROUND WATER AT THE 881 HILLSIDE AREA WHICH CONTAIN CONSTITUENTS WHICH ARE SIMILAR TO THE OU 2 SURFACE WATER CONTAMINANTS. HOWEVER, WITH REGARD TO ION EXCHANGE, PLUTONIUM IS NOT A GROUND WATER CONTAMINANT AT THE 881 HILLSIDE AREA, AND ION EXCHANGE (OR OTHER INORGANIC TREATMENT TECHNOLOGIES) ARE NOT PROVEN TECHNOLOGIES FOR

REMOVAL OF PLUTONIUM FOR NATURAL WATER. THERE IS NO APPRECIABLE DIFFERENCE IN ENVIRONMENTAL IMPACTS OF THE ALTERNATIVE ORGANIC CONTAMINANT TREATMENT TECHNOLOGIES. THE CROSS-FLOW MEMBRANE FILTRATION SYSTEM IS THE ONLY PROVEN SYSTEM FOR REMOVAL OF THE TARGETED RADIONUCLIDES.

8.2.2 PERSONNEL EXPOSURE

THE USE OF ALTERNATE TREATMENT TECHNOLOGIES WOULD HAVE LITTLE IMPACT ON THE PERSONNEL EXPOSURE ASSOCIATED WITH SURFACE WATER CLEANUP. THE CONTAMINANTS IN THE WATER REMAIN THE SAME AND THE REMOVAL TECHNIQUES ARE ESSENTIALLY SIMILAR WITH RESPECT TO PERSONNEL EXPOSURE A RISK.

8.2.3 TRANSPORTATION

THE SELECTION OF ONE OF THE OTHER ALTERNATIVE TREATMENT TECHNOLOGIES MAY REQUIRE DIFFERENT TRANSPORTATION REQUIREMENTS, DEPENDENT ON THE RATE OF WATER TREATED AND THE CONTAMINANTS TO BE REMOVED. THE ION EXCHANGE COLUMNS UTILIZE RESIN BEADS THAT MAY REQUIRE PERIODIC REPLACEMENT. USING A UV PEROXIDE TREATMENT PROCESS WOULD REDUCE TRANSPORTATION IMPACTS PRIMARILY DUE TO ELIMINATION OF SOME OF THE BY-PRODUCT MATERIALS PRODUCED BY THE PROCESS. OVERALL, THE TRANSPORTATION IMPACT FOR THIS ALTERNATIVE IS MINIMAL.

8.3 SUMMARY

THE IMPACTS OF THE ALTERNATIVES ARE JUDGED TO BE SMALL. THE POTENTIAL IMPACTS ASSOCIATED WITH THE PROPOSED ACTION AND EACH OF THE IDENTIFIED ALTERNATIVES ARE PRESENTED IN TABLE 8-1-A AND B.

ROCKY FLATS PLANT (USDOE)

Site Information:

Site Name: ROCKY FLATS PLANT (USDOE)
Address: GOLDEN, CO

EPA ID: CO7890010526
EPA Region: 08

Record of Decision (ROD):

ROD Date: 04/06/1992
Operable Unit: 04
ROD ID: EPA/ROD/R08-92/064

Media: Surface Water

Contaminant: VOCs, Metals, Radioactive Materials

Abstract: SITE HISTORY/DESCRIPTION: The Rocky Flats Plant (USDOE) (Operable Unit 4) site is part of the 6,500-acre nuclear weapons research, development, production, and plutonium processing complex in Jefferson County, Colorado. The plant is composed of the 450-acre Rocky Flats Plant (RFP) security area and the remaining buffer area. Land use in the area is predominantly rural, agricultural, commercial, and industrial, with several residential areas within 5 miles of the site. Since 1951, the Department of Energy (DOE) has used the site for manufacturing components of nuclear weapons; processing plutonium; and fabricating, machining, and assembling components from metals. The central portion of RFP contains the Solar Evaporation Pond (SEPs) Waste Management Unit, including Ponds 207-A, 207-B North, 207-B Center, 207-B South, 207-C, and the Interceptor Trench System (ITS). The SEPs were formerly used to store and treat liquidprocess waste having less than 100,000 picocuries per liter of total long-lived alpha activity. These process wastes also contained high concentrations of nitrates as well as treated acidic wastes containing aluminum hydroxide. The ponds are known to have received other wastes, including sanitary sewer sludge, lithium chloride, lithium metal, sodium nitrate, ferric chloride, sulfuric acid, ammonium persulfates, hydrochloric acid, nitric acid, hexavalent chromium, tritium, and cyanide solutions. Sludge from the SEPs was removed periodically to implement repair work on the pond liners and as part of routine waste management

activities. Removed sludge was mixed with Portland cement and solidified as a mixture of sludge and concrete for shipment for offsite disposal. In 1986, placement of process waste material into these ponds ceased. From 1971 to 1974, construction of interceptor trenches was initiated to prevent natural seepage and pond leakage from entering North Walnut Creek. In 1981, the system was replaced by the current ITS, which collects an estimated 4 million gallons per year for discharge to the 207-B ponds. This interim ROD addresses management and treatment of liquids contained in ponds 207-A, 207-B North, 207-B Center, 207-B South, and the water collected by the ITS as the OU4 at the site. Future RODs will address removal and solidification of sludge, further investigation, characterization, and remedial activities. The primary contaminants of concern affecting the surface water are VOCs, including TCE; metals,including chromium; and radioactive materials, including Pu[-239] and Am[-241]. PERFORMANCE STANDARDS OR GOALS: Chemical-specific surface water clean- up goals are based on sitespecific radionuclide standards and MCLGs or MCLs and attainment of relevant CWA water quality criteria. INSTITUTIONAL CONTROLS: Not provided.

Remedy: SELECTED REMEDIAL ACTION: The selected interim remedial action for this site includes constructing and utilizing three temporary surge tanks and associated piping to contain and transfer water collected by the ITS; evaporating approximately 3 million gallons of water from pond 207-A and 5 million gallons of water from the 207-B ponds using onsite flash evaporators and associated tanks; transferring the distillate to a holding tank for reinjection into the Raw Water System for plant cooling tower usage; and collecting the flash evaporator concentrate in holding tanks, and onsite solidification of the residual; conducting treatability studies using surrogate pond water to simulate the proposed treatment system. The estimated total cost for this interim remedial action is $8,017,000, which includes an annual O&M cost of $1,170,000 for 3 years.

Text: Full-text ROD document follows on next page.

Text:
FINAL

PROPOSED
INTERIM MEASURE/INTERIM REMEDIAL ACTION
DECISION DOCUMENT FOR THE SOLAR EVAPORATION PONDS
OPERABLE UNIT NO. 4

U.S. DEPARTMENT OF ENERGY
Rocky Flats Plant
Golden, Colorado

April 1992

ENVIRONMENTAL RESTORATION PROGRAM

TABLE OF CONTENTS

LIST OF TABLES
LIST OF FIGURES
LIST OF APPENDICES
EXECUTIVE SUMMARY
1.0 INTRODUCTION
1.1 SITE NAME AND LOCATION
1.2 STATEMENT OF BASIS AND PURPOSE
1.3 ASSESSMENT OF THE SITE
1.4 IM/IRA PROJECTS
1.5 DESCRIPTION OF THE SELECTED REMEDY
1.6 DECLARATION
1.7 EPA AND CDH SUPPORT AND ACCEPTANCE OF THE SELECTED REMEDY
2.0 SITE CHARACTERIZATION
2.1 SITE NAME, LOCATION AND DESCRIPTION
2.1.1 Topography
2.1.2 Meteorology
2.1.3 Nearby Populations, Uses of Adjacent Land and Natural Resources
2.1.4 Site and Local Surface Hydrology
2.1.5 Site and Local Hydrogeology
2.1.6 Ecology
2.2 SITE HISTORY AND ENFORCEMENT ACTIVITIES
2.3 SUMMARY OF CONTAMINANTS ASSOCIATED WITH THIS IM/IRA
2.3.1 Ponds 207-B North, Center, and South
2.3.2 Pond 207-C
2.3.3 Interceptor Trench System (ITS)
2.4 COMMUNITY PARTICIPATION
2.5 SCOPE AND ROLE OF THE IM/IRA
2.6 SUMMARY OF SITE RISKS
2.6.1 Pathway Exposure Assessment
2.6.2 Chemicals of Concern
2.6.2.1 Radionuclides
2.6.2.2 Metals
2.6.2.3 Organics
2.6.3 Toxicity Assessment
2.6.3.1 Radionuclides
2.6.3.2 Metals
2.6.3.3 Volatile Organics
2.6.4 Risk Characterization
3.0 DESCRIPTION AND ANALYSIS OF SELECTED REMEDY
3.1 DESCRIPTION OF SELECTED REMEDY
3.1.1 Treatment System Components
3.1.1.1 Location and Equipment Description

3.1.1.2 Process Description
3.1.1.3 Sampling and Analytical Requirement
3.1.1.4 Waste Analysis Plan (WAP)
3.1.1.5 Facility Safety Features
3.1.2 Storage Components
3.1.2.1 Location of Tanks
3.1.2.2 Equipment Description
3.1.3 General Components
3.1.3.1 Quantity of Waste to be Treated
3.1.3.2 Treatability Testing
3.1.3.3 General Inspections
3.1.3.4 Management of Waste
3.1.3.5 Institutional Controls
3.1.3.6 Assumptions, Uncertainties and Contingencies
3.1.3.7 Closure of IM/IRA Structural Components
3.1.4 Costs
3.1.5 Remediation Goals and Performance Standards
3.1.6 Proposed Schedule of Milestones
3.2 ANALYSIS OF SELECTED REMEDY
3.2.1 Overall Protection of Human Health and the Environment
3.2.2 Compliance with ARARs
3.2.3 Long-Term Effectiveness and Permanence
3.2.4 Reduction of Toxicity, Mobility or Volume through Treatment
3.2.5 Short-Term Impacts
3.2.6 Implementability
3.2.7 Cost
3.2.8 State Acceptance
3.2.9 Community Acceptance
4.0 IDENTIFICATION AND ANALYSIS OF POTENTIAL ARARs
4.1 STATEMENT AND BASIS OF PURPOSE OF POTENTIAL ARAR ANALYSIS
4.2 SCOPE OF INTERIM MEASURES/INTERIM REMEDIAL ACTION
4.3 COMPLIANCE WITH APPLICABLE OR RELEVANT AND APPROPRIATE REQUIREMENTS (ARARs) AND PROTECTION OF HUMAN HEALTH AND THE ENVIRONMENT 4.3.1 ARARs 4.3.2 TBCs 4.3.3 ARAR Categories 4.4 AMBIENT OR CHEMICAL-SPECIFIC REQUIREMENTS 4.4.1 Safe Drinking Water Act MCLs 4.4.2 Colorado WQCC Standards for Surface Water 4.4.3 CWA Ambient Water Quality Criteria (AWQC) 4.4.4 Protection of Human Health and the Environment 4.5 LOCATION SPECIFIC REQUIREMENTS 4.6 PERFORMANCE, DESIGN, OR OTHER ACTION SPECIFIC REQUIREMENTS
5.0 EXPLANATION OF SIGNIFICANT CHANGES TO THE IM/IRA 6.0 PUBLIC COMMENT AND RESPONSIVENESS SUMMARY 6.1 COMMUNITY INVOLVEMENT 6.2 RESPONSES TO COMMENTS RECEIVED DURING THE PUBLIC COMMENT PERIOD 6.2.1 Verbal Comments Received During the Public Meeting 6.2.2 Written Comments Received During the Public Comment Period 6.2.2.1 EPA Comments 6.2.2.2 PRC Environmental Management, Inc. Comments (EPA Contractor) 6.2.2.3 CDH Comments 6.2.2.4 City of Arvada Comments 6.2.2.5 Rocky Flats Cleanup Commission Comments 6.2.2.6 Specific Comments to Section 2.0 6.2.3 Citizen Comments 6.2.4 U.S. Fish and Wildlife Service Comments 7.0 LIST OF REFERENCES

LIST OF TABLES

TABLE TITLE

2.1 SOLAR EVAPORATION POND 207-A, SUMMARY OF LIQUID SAMPLING RESULTS

2.2 SOLAR EVAPORATION POND 207-B (NORTH), SUMMARY OF LIQUID SAMPLING RESULTS

2.3 SOLAR EVAPORATION POND 207-B (CENTER), SUMMARY OF LIQUID SAMPLING RESULTS

2.4 SOLAR EVAPORATION POND 207-B (SOUTH), SUMMARY OF LIQUID SAMPLING

RESULTS

2.5 SOLAR EVAPORATION POND 207-C, SUMMARY OF LIQUID SAMPLING RESULTS
2.6 SUMMARY OF SELECT ANALYTICAL DATA (SW-095), INTERCEPTOR TRENCH SYSTEM WATER

2.7 CONCENTRATIONS OF SELECTED METALS

3.1 ESTIMATED COSTS OF SELECTED REMEDY

3.2 MILESTONE SCHEDULE

4.1 POTENTIAL CHEMICAL SPECIFIC ARARs/TBCs (STATE STANDARDS)

4.2 POTENTIAL CHEMICAL SPECIFIC ARARs/TBCs (FEDERAL STANDARDS)

4.3 PROPOSED CHEMICAL SPECIFIC ARARs/TBCs

4.4 ANALYSIS OF LOCATION SPECIFIC ARARs

4.5 ANALYSIS OF ACTION SPECIFIC ARARs

LIST OF FIGURES

FIGURE TITLE

2-1 ROCKY FLATS LOCATION MAP

2-2 ROCKY FLATS PLANT AND VICINITY

2-3 SOLAR EVAPORATION POND AREA

2-4 TOPOGRAPHIC MAP OF SOLAR EVAPORATION POND AREA

2-5 1989 POPULATIONS AND HOUSEHOLDS

2-6 UPSTREAM AND ON-SITE SURFACE WATER FEATURES

2-7 CONCEPTUAL EXPOSURE PATHWAYS

3-1 MAIN FLOOR BUILDING 910

3-2 LOWER LEVEL BUILDING 910

3-3 CONCEPTUAL FLOW DIAGRAM PORTABLE EVAPORATORS

3-4 PROPOSED LOCATION FOR TEMPORARY SURGE TANKS

3-5 TYPICAL TANK CONSTRUCTION

LIST OF APPENDICES

APPENDIX TITLE

A ANALYTICAL DATA FOR INTERCEPTOR TRENCH SYSTEM WATER

B WASTE ANALYSIS PLAN, PORTABLE EVAPORATOR, BUILDING 910
C ANALYTICAL DATA FOR WATER IN ALL SOLAR PONDS

D ARARs AGREEMENT LETTERS

EXECUTIVE SUMMARY

This document is the Proposed Interim Measure/Interim Remedial Action (IM/IRA) Decision Document for Operable Unit No. 4 (OU4), the Solar Evaporation Ponds (SEPs). This document was prepared in accordance with the Rocky Flats Interagency Agreement (IAG), dated January 22, 1991, and applicable regulatory guidance documents. This IM/IRA document incorporates the United States Environmental Protection Agency (EPA) and Colorado Department of Health (CDH) comments on the draft IM/IRA Decision Documents dated July 1991 and August 1991.

Approximately 8 million gallons of excess liquids need to be removed from the 207-A and 207-B SEPs before the remaining sludges can be removed for solidification. Natural evaporation of pond liquids accounts for only 2 million gallons per year. Furthermore, water collected by an Interceptor Trench System (ITS), approximately 4 million gallons per year, is currently pumped into Pond 207-B North. Changes to the current operation of the SEPs are required to allow closure and remedial activities to proceed. Specifically, the addition of water to the ponds through precipitation and collection from the ITS must cease, an alternate means of storing and treating collected water is needed, and an accelerated means of removing excess pond liquids is required to allow removal of sludge and sediments from the SEPs. Additional activities beyond the scope of this IM/IRA, such as removal and solidification of sludges into pondcrete, further investigation, characterization, and remedial activities, will continue to occur at OU4.

The major components of the selected remedy include:

- The construction and utilization of three temporary surge tanks and associated piping to contain and transfer water collectedby the ITS

- Three portable flash evaporators and associated tanks to treat excess liquids contained in the 207-A and 207-B SEPs, and to treat future ITS collected waters.

The selected remedy is expected to pose a minimal risk to the health of workers, the general public, and the environment. The risk of the remedy is considered low because the proposed system operates as a closed loop. The risk due to the surge tanks is low because of the low concentration of contaminants in the ITS water. The risk to the public due to exposure to contaminated ground water is also low because there are no completed exposure pathways. Currently, this IM/IRA is anticipated to operate through 1995.

1.0 INTRODUCTION

This document is the Proposed Interim Measure/Interim Remedial Action (IM/IRA) Decision Document for Operable Unit No. 4 (OU4), the Solar Evaporation Ponds (SEPs). This document was prepared in accordance with the Rocky Flats Interagency Agreement (IAG), dated January 22, 1991, and applicable regulatory guidance documents. This IM/IRA document incorporates the United States Environmental Protection Agency (EPA) and Colorado Department of Health (CDH) comments on the draft IM/IRA Decision Documents, dated July 1991 and August 1991. This IM/IRA is expected to operate through 1995.

This IM/IRA document for OU4, the SEPs, is intended to facilitate implementation of the SEPs' RCRA partial closure actions. As such, the IM/IRA is being taken as an enabling activity to facilitate removal and solidification of pond sludges and site closure. This IM/IRA document is

not related to the IM/IRA as referenced in the IAG. The IAG IM/IRA, scheduled in 1994, follows the Phase I RFI/RI report and would be presented only after the RFI/RI was completed and approved. The distinction between this IM/IRA and the IAG IM/IRA are the activities associated with pondcrete operations. Pondcrete operations are addressed in the Agreement In Principle (AIP), not the IAG, and thus this IM/IRA presents information regarding actions necessary before pondcrete operations can continue to be implemented. Thus, the IM/IRA actions presented in this decision document are focused only on operations relating to the flash evaporator and surge tank systems. Also, this IM/IRA is a mechanism for permitting the use of the proposed treatment (i.e., use of surge tanks and flash evaporators) as directed by EPA and CDH.

1.1 SITE NAME AND LOCATION

Rocky Flats Plant, United States Department of Energy (DOE), Golden, Colorado.

1.2 STATEMENT OF BASIS AND PURPOSE

This IM/IRA is necessary to stabilize wastes in the SEPs, so that subsequent characterization and remediation can be completed for this site. This decision document presents the selected interim remedial action for OU4, the SEPs, which was chosen to permit the required SEP closure activities to proceed, in accordance with the IAG, the Colorado Hazardous Waste Act (CHWA), the Comprehensive Environmental Response, Compensation, and Liability Act (CERCLA), as amended by the Superfund Amendments and Reauthorization Act (SARA), the Resource Conservation and Recovery Act (RCRA), and the National Oil and Hazardous Substances Pollution Contingency Plan (NCP). This decision is based on the administrative record for OU4, the SEPs, and is deemed a necessary component for continued closure activities of the SEPs.

1.3 ASSESSMENT OF THE SITE

Actual or threatened releases of hazardous substances from this site, if not addressed by implementing the response action selected in this IM/IRA Decision Document, may present an imminent and substantial endangerment to public health, welfare or the environment.

1.4 IM/IRA PROJECTS

The SEPs are RCRA interim status regulated units that are currentlyundergoing closure activities. The removal of liquids and sludge is required to fulfill the intent of the AIP, which states in part "several past disposal sites (i.e., solar ponds) on the plant pose a high risk for further spread of contaminants into surface water, ground water and the soil. The ... site(s) require(s) special and accelerated actions by the DOE" (DOE, 1989b). A "no action" alternative to this IM/IRA is inconsistent with the AIP and the IAG, and was not considered for these activities because the ponds must be dewatered in order to proceed with partial closure activities and final remediation of the SEPs.

The objectives of this IM/IRA are to cease the addition of liquids (intercepted or trench water) to Pond 207-B North, and to remove excess liquids from the SEPs (207-A and 207-B North, 207-B Center and 207-B South) as expeditiously as possible in order to proceed with closure activities for the ponds consistent with state and federal laws, the IAG, the AIP and the protection of human health and the environment.

1.5 DESCRIPTION OF THE SELECTED REMEDY

The SEPs were formerly used to store and treat liquid process waste. Emplacement of process waste material into these ponds ceased in 1986. Present ongoing activities include evaporation of the liquids currently held in the ponds, removal and solidification of pond sludge, and site monitoring

and characterization activities. The 207-B ponds (primarily the North impoundment) continue to be used for storage of water collected by the ITS.

Approximately 8 million gallons of excess liquids need to be removed from the 207-A and 207-B ponds before the remaining sludges can be removed for solidification. Pond 207-C is not included in this IM/IRA because the entire contents of the pond will be solidified. Natural evaporation of pond liquids accounts for only 2 million gallons per year. Furthermore, water collected by an ITS (approximately 4 million gallons per year) is currentlypumped into Pond 207-B North. Changes to the current operation of the SEPs are required to allow closure and remedial activities to proceed. Specifically, the addition of collected water to the ponds must cease, an alternate means of storing and treating collected water is needed, and an accelerated means of removing excess pond liquids is required to allow removal of sludge and sediments from the SEPs. Additional activities beyond the scope of this IM/IRA, such as the removal and solidification of sludges into pondcrete, further investigation, characterization, and remedial activities, will continue to occur at OU4.

The major components of the selected remedy include:

- The construction and utilization of three temporary surge tanks and associated piping to contain and transfer water collected by the ITS

- Three portable flash evaporators and associated tanks to treat excess liquids contained in the 207-A and 207-B SEPs and to treat collected waters.

1.6 DECLARATION

The interim action selected in this IM/IRA Decision Document is protective of human health and the environment, complies with federal and state applicable or relevant and appropriate requirements (ARARs) for this limitedscope action, and is cost-effective. Although this interim action is not intended to address fully the statutory mandate for permanent solutions, to the maximum extent practicable, this interim action does utilize treatment and thus is in furtherance of that statutory mandate. Because this action does not constitute the final remedy for the solar ponds, the statutory preference for remedies that employ treatment that reduces toxicity, mobility, or volume as the principal element, although partially addressed in this remedy, will be addressed by the final response action. Subsequent actions are planned to address fully the threats posed by the conditions at the solar ponds. Because thisis an interim measure/interim remedial action, review of the solar ponds will be ongoing as EPA, CDH and DOE continue to develop final remedial alternatives for the solar ponds under the IAG.

1.7 EPA AND CDH SUPPORT AND ACCEPTANCE OF THE SELECTED REMEDY

The IM/IRA Decision Document shall be final upon conclusion of the 60-day public comment period and EPA and CDH approval.

2.0 SITE CHARACTERIZATION

2.1 SITE NAME, LOCATION AND DESCRIPTION

The Rocky Flats Plant (RFP) is a government-owned and contractoroperated facility. The facility is part of a nationwide nuclear weapons research, development, production and plutonium reprocessing complex administered by the Rocky Flats Operations Office of the DOE. The operating contractor for the RFP is EG&G Rocky Flats, Inc. The facility manufactures components for nuclear weapons and conducts plutonium reprocessing. It has been in operation since 1951. The RFP fabricates components from plutonium, uranium, beryllium, and stainless steel. Historically, production

activities have included metal fabrication, machining, and assembly. Both radioactive and nonradioactive wastes are generated in the process. Current waste handling practices involve on-site and off-site recycling of hazardous materials and off-site disposal of solid radioactive materials at another DOE facility.

The RFP is located in northern Jefferson County, Colorado approximately 16 miles northwest of Denver and 9 to 12 miles from the neighboring communities of Boulder, Broomfield, Golden, and Arvada (see Figure 2-1). The immediate area around the RFP is primarily undeveloped and agricultural land. The RFP is bounded on the north by State Highway 128, on the west by a parcel of land east of State Highway 93, on the south by a parcel of land north of State Highway 72, and on the east by Jefferson County Highway 17. Access to the plant is from an east access road exiting from Jefferson County Highway 17, or awest access road exiting from State Highway 93.

The facility is situated at an elevation of approximately 6,000 feet above mean sea level (msl). It is on the eastern edge of a geological bench known locally as Rocky Flats. The bench is approximately 5 miles wide and flanks the eastern edge of the foothills of the Rocky Mountains. The RFP consists of approximately 6,500 acres of federally-owned land in Sections 1 through 4, and Sections 9 through 15 of T2S, R70W, 6th Principal Meridian. Major buildings are located within the RFP Protected Area (PA) of approximately 400 acres. The PA is surrounded by a buffer zone of approximately 6,150 acres. The PA is within the controlled/security area (see Figure 2-2).

The SEPs are located in the central portion of the RFP on the northeast side of the PA. The SEP Waste Management Unit includes Ponds 207-A, 207-B North, 207-B Center, 207--B South, 207-C, and the ITS (see Figure 2-3). The SEPs are RCRA interim status regulated units that are currently undergoing closure activities. Activities associated with this IM/IRA would occur totally within the facility boundaries and

would be controlled by standard facility procedures in compliance with the appropriate environmental regulations.

The SEPs are currently configured as a series of five evaporation ponds (see Figure 2-3). Pond 207-A was placed into service in August 1956. Ponds 207-B, North, Center, and South were placed into service in June 1960. Pond 207-C was constructed in 1970 to provide additional storage capacity and to allow the transfer and storage of liquids from the other ponds in order to perform pond repair work. These ponds were formerly used to store and treat liquid process waste having less than 100,000 picocuries per liter (pCi/1) oftotal long-lived alpha activity (DOE, 1980). These process wastes also contained high concentrations of nitrates as well as treated acidic wastes containing aluminum hydroxide. The ponds are also known to have received other wastes, including sanitary sewer sludge, lithium chloride, lithium metal, sodium nitrate, ferric chloride, sulfuric acid, ammonium persulfates, hydrochloric acid, nitric acid, hexavalent chromium, tritium, and cyanide solutions (Rockwell International, 1988).

Sludges from the SEPs have been removed from time to time to implement repair work on the pond liners and as part of routine waste management activities. As the sludges were removed, they were mixed with Portland cement and solidified as a mixture of sludge and concrete (pondcrete) for shipment to an off-site low-level radioactive waste disposal site.

Emplacement of process waste material into these ponds ceased in 1986 because of changes in RFP waste treatment operations. Present ongoing activities include evaporation of the liquids currently held in the ponds, and site monitoring and characterization activities. The 207-B ponds

(primarily the North impoundment) continue to be used for storage of intercepted seepage water collected by the ITS.

Construction of interceptor trenches during the period from October 1971 through April 1974 was initiated to prevent natural seepage and pond leakage from entering North Walnut Creek. This system has been replaced by the current ITS (see Figure 2-3).

The ITS (also known as the French Drain System) was installed in the hillside north of the SEPs. It became active in April 1981 and is currently in use. The depths of the drain system ranges from approximately 1 to 27 feet below the ground surface, with typical depths of 4 to 16 feet (Rockwell International, 1988). Water collected in the ITS flows by gravity to the interceptor trench pump house (see Figure 2-3). The water from the pump house is currently pumped to Pond 207-B North. The current amount of intercepted seepage collected by the ITS is estimated to be approximately 4 million gallons per year. The maximum amount of water collected in any one week was 700,000 gallons in June 1987 (Rockwell International 1988).

2.1.1 Topography

The RFP is located along the eastern edge of the southern Rocky Mountain region immediately east of the Colorado Front Range. The plant site is located on a broad, eastward sloping pediment that is capped by alluvial deposits of Quaternary age (Rocky Flats Alluvium). The pediment surface has a fan-like form with its apex near the mouth of Coal Creek Canyon and distal margins approximately 2 miles east of the RFP. The tops of alluvialcovered pediments are nearly flat but slope gently eastward at 100 to 50 feet per mile (EG&G, 1991d). At the RFP the pediment surface is dissected by a series of east-northeast trending stream-cut valleys. The valleys containing Rock Creek, North and South Walnut Creeks, and Woman Creek lie 50 to 200 feet below the level of the older pediment surface. These valleys are incised into the bedrock underlying alluvial deposits, but most bedrock is concealed beneath colluvial material accumulated along the gentle valley slopes.

A topographic map of OU4 (see Figure 2-4) illustrates the area surrounding the SEPs and the proposed location for the temporary surge tanks. The siting for the temporary surge tanks is explained in Section 3.1.2 of this document.

2.1.2 Meteorology

The area surrounding the RFP has a semiarid climate characteristic of much of the central Rocky Mountain region. Based on precipitation recorded between 1953 and 1976, the mean annual precipitation at the plant is 15 inches. Approximately 40 percent of the precipitation falls during the spring season, much of it as wet snow. Thunderstorms (June to August) account for an additional 30 percent of the annual precipitation. Autumn and winter are drier seasons, accounting for 19 and 11 percent of the annual precipitation, respectively. Snowfall averages 85 inches per year, falling from October through May (DOE, 1980).

Winds at the RFP, although variable, are predominantly from the west-northwest. Stronger winds occur during the winter, and the area occasionally experiences Chinook winds with gusts up to 100 miles per hour. The canyons along the Front Range tend to channel the air flow during both upslope and downslope conditions, especially when there is strong atmospheric stability (DOE, 1980).

Rocky Flats meteorology is strongly influenced by the diurnal cycle of mountain and valley breezes. Two dominant flow patterns exist, one during daytime conditions and one at night. During daytime hours, as the earth

heats, the mountains receive more direct sunlight than the plain and valleys. The result is a general trend for air flow to travel toward the higher elevation (upslope). The general air flow pattern during upslope conditions for the Denver area is typically north to south, with flow moving up the South Platte River Valley and then entering the canyons into the Front Range. After sunset, the air against the mountain side is cooled and begins to flow toward the lower elevations (downslope). During downslope conditions, air flows down the canyons of the Front Range onto the plain. This flow converges with the South Platte River Valley flow moving toward the north-northeast.

Temperatures at the RFP are moderate. Extremely warm or cold weather is usually of short duration. On average, daily summer temperatures ranges from 55 to 85 degrees Fahrenheit (F), and winter temperatures range from 20 to 45 F. Temperature extremes recorded at the plant range from 102 F on July 12, 1971, to -26 F on January 12, 1963. The 24-year daily average maximum temperature for the period 1952 to 1976 is 76 F, the daily minimum is 22 F, and the average mean is 50 F. Average relative humidity is 46 percent (DOE, 1980).

2.1.3 Nearby Populations, Uses of Adjacent Land and Natural Resources
The population, economics, and land use of the areas surrounding the RFP are described in a 1989 Rocky Flats vicinity demographics report by DOE (DOE, 1990b). This report divides general use of areas within zero to 10 mi (zero to 16 km) of the RFP into residential, commercial, industrial, parks and open spaces, agricultural and vacant, and institutional classification, and considers current and future land use near the plant.

The majority of residential use within 5 miles (8 km) of the RFP is located immediately north and southwest of Standley Lake (IHSS 201). Single family residents are also located immediately east and south of the RFP. Figure 2-5 shows the 1989 population distribution within areas up to 5 miles from the RFP. Commercial development is concentrated near the residential developments north and southwest of Standley Lake, and around the Jefferson County Airport approximately 3 miles (4.8 km) northeast of the RFP. Industrial land use within 5 miles (8 km) of the plant is limited to quarrying and mining operations. Open Space lands are located northeast of the RFP near the City of Broomfield, and in small parcels adjoining major drainages and small neighborhood parks in the cities of Westminster and Arvada. Standley Lake is surrounded by Standley Lake Park. Irrigated and non-irrigated croplands, producing primarily wheat and barley, are located northeast of the RFP near the cities of Broomfield, Lafayette, and Louisville, north of the RFP near Louisville and Boulder, and in scattered parcels adjacent to the eastern boundary of the

plant. Several horse operations and small hay fields are located south of the RFP. The demographics report characterizes much of the vacant land adjacent to the RFP and the reservoirs as rangeland (DOE, 1990b).

This proposed action would be within the existing RFP boundaries and would not adversely impact adjacent agricultural areas or recreation areas. The action would tend to enhance the subsurface environment in the vicinity of the SEPs and limit potentially adverse environmental effects from contaminant migration off-site.

The land use immediately adjacent to OU4 consists of plant process areas and the buffer zone for the facility.

2.1.4 Site and Local Surface Hydrology
Several ephemeral streams flow through the RFP area. Three of these streams (North Walnut Creek, South Walnut Creek, and Woman Creek) originate within

the RFP boundary and flow generally eastward from the plant site. The Walnut Creek and Woman Creek drainages within the boundary of the RFP are being investigated under the IAG as OU5 and OU6, respectively. A fourth ephemeral stream, Rock Creek, originates in the Buffer Zone northwest of the main production facility and flows northwest from the RFP (see Figure 2-6). Other surface water features in the vicinity of the plant included a complex network of manmade diversions and impoundments. Flow into and within the surface water features results from direct surface runoff, base flow from ground water, and diversions and wastewater from human-related activities.

Surface water drainage from the SEPs area is toward North Walnut and South Walnut Creeks. A series of retention ponds known as the A-series ponds are located on North Walnut Creek and a series of retention ponds known as the B -series ponds are located on South Walnut Creek (see Figure 2-6). South Walnut Creek joins North Creek and an unnamed tributary coming from the landfill area, approximately 0.7 mile downstream of the eastern edge of the plant security area, within the buffer zone. The Walnut Creeks then flow eastward approximately 1 mile to Great Western Reservoir. North Walnut Creek is an eastward flowing stream located north of the SEPs area. Surface runoff patterns indicate flow enters the drainage from the SEPs area, the 700 Building Complex, the 300 Building Complex, and general surface runoff from the north and west sides of the plant (Rockwell International, 1988).

The A-series ponds on North Walnut Creek are designated A-1, A-2, A-3, and A -4, from west to east. Ponds A-1 and A-2 are used only for spill control, and North Walnut Creek stream flow is diverted around them through an underground pipe. Until 1980, Ponds A-1 and A-2 were used for storage and evaporation of laundry water. Pond A-3 receives the North Walnut Creek stream flow and runoff from the northern portion of the Plant. Pond A-4 is designed for surface water control and for additional storage capacity for overflow from Pond A-3.

The discharge from the ponds are regularly monitored to document compliance with National Pollutant Discharge Elimination System (NPDES) permit requirements. In addition to NPDES monitoring requirements, all discharges are monitored for plutonium, americium, uranium, and tritium concentrations.

2.1.5 Site and Local Hydrogeology

Two hydraulically-connected ground water systems exist in the RFP area: the shallow system which is present is saturated surficial deposits (the upper hydrostratigraphic unit) in many areas of the RFP, and the deeper system in claystones and sandstones of the underlying Arapahoe Formation (the lower hydrostratigraphic unit). The shallow unconfined system is recharged by infiltration from incident precipitation and from surface and base flow water (such as drainages and reservoirs). Ground water flow is generally to the east and toward drainages. Ground water locally discharges as seeps or springs in drainages, especially where the surficial deposit/bedrock contact is exposed. Large water table fluctuations may occur in the shallow system in response to seasonal variations in recharge and discharge, with the highest water levels generally occurring during the months of May and June and thelowest water levels generally occurring in January and February. As a result of these fluctuations, the lateral and vertical extent of saturated surficial deposits varies seasonally. Recent work has estimated hydraulic conductivities for the RFP geologic units at 10[-5] cm/sec in the Rocky Flats Alluvium, 10[-5] cm/sec in subcroppings Arapahoe Formation sandstones, 10[-6] cm/sec in unweathered Arapahoe Formation sandstones, and 10[-7] cm/sec in both weathered and unweathered Arapahoe Formation claystones (DOE, 1991e; EG&G, 1991b).

Ground water in the lower hydrostratigraphic unit exists primarily in lenticular sandstone bodies within claystone. Ground water flow in the

upper hydrostratigraphic unit occurs in the unconsolidated Quaternary surficial deposits and the shallow sandstone within the bedrock. Recharge to this unit consists of infiltration from streams and precipitation. The lower hydrostratigraphic unit is found in the deeper bedrock sandstones which exhibit confined conditions. Recharge to this unit occur primarily from base flow and leakage from the overlying claystone. Ground water in the lower hydrostratigraphic unit flows east towards a regional discharge area along the South Platte River some 20 miles (32 km) east of the RFP. Local seeps occur along the sides of drainages where the bedrock crops out. Calculated horizontal linear flow velocities for the bedrock system's average 0.1 ft/day (0.03 m/day) in the sandstone and approximately 9 x 10[-4] ft/day (2.7 x 10[-4] m/day) in the claystone.

Ground water generally flows toward the east in the SEPs area in the surficial materials and weathered bedrock portions of the shallow ground water system. In the surficial materials, ground water flow diverges somewhat in two directions: to the northeast toward North Walnut Creek and to the eastsoutheast toward South Walnut Creek. In weathered bedrock, like surficial materials, ground water flows to the northeast and southeast. This ground water system is locally influenced by topography, the configuration of the top of bedrock,and the ITS north of the ponds. Consistent with regional recharging of the Arapahoe Formation in this locality, it is assumed that ground water flows eastward within the subcropping sandstones.

Estimates of the vertical hydraulic gradient between surficial materials and weathered bedrock revealed downward saturated flow between surficial materials and weathered bedrock. Water levels needed for the calculations were obtained from ground water elevation data measured in 1990. Upward vertical flow has been reported in previous investigations.

The first and third quarters of 1990 represented the high and low flow regimes, respectively, for the vicinity. Alluvial ground water enters the SEPs area from the west and flows east and then northeast or southeast. Downgradient of the ponds to the north, most of the colluvial materials on the hill slope were removed during construction of the ponds and the ITS. Alluvial ground water in this area seeps into weathered bedrock where it is collected by the ITS or consumed by evapotranspiration. North Walnut Creek and the waste management area are separated by a region of unsaturated alluvium or the absence of surficial materials above the water table. Although this region is extensive north of the ponds, flow toward North Walnut Creek is evident northeast of the ponds. Additionally, small regions of absent or unsaturated alluvium are evident west, east, and south of the solar ponds. These regions do not appear to impede ground water flow to the southeast. (DOE, 1991e; EG&G, 1991b).

2.1.6 Ecology

Ecosystems in the RFP buffer zone and surrounding areas are typical for the foothill ravine and High Plains portions of Colorado. Aquatic ecosystems include perrenial and intermittent streams, and several types of man-made ditches, canals, ponds and reservoirs. Terrestrial ecosystems include grasslands, shrublands and woodlands, areas of reseeded and barrenlands, and horticultural plantings. The Ecology Standard Operating Procedures desribe 6 aquatic and 17 terrestrial habitat types. Many areas east and south of RFP have been converted to uses like commercial and residential development, agricultural, and grazing land, and water control and storage. Within the RFP Buffer Zone, there has been extensive grazing by both native wildlife and domestic livestock. Domestic livestock have been excluded for more than 20 years from most of the buffer zone. In the west side of the buffer zone is a relict stand of plants including big bluestem, little bluestem and other plants of the tallgrass prairie. Virgin stands of grass like this,

located in areas dominated by shortgrass steppe plants are rare. Because of the elevation, water regime and location between the High Plain and Intermontane physiographic regions, many species of plants and animals usually found in different habitats intermingle in the RFP buffer zone. The result is an extremely rich and diverse population of native plants and animals.

A variety of vegetation is found within the buffer zone surrounding RFP. Included are species of flora representative of tall-grass prairie, short-grass plains, lower montane, and foothill ravine regions. Riparian vegetation exists along the site's drainages and wetlands. None of these vegetative species present at RFP have been reported to be on the endangered species list (EG&G, 1991f). Since acquisition of RFP property, vegetative recovery has occurred, as evidenced by the presence of disturbance-sensitive grass species such as big bluestem (Andropogon gerardii) and side oats grama (Bouteloua curtipendula) (DOE, 1980).

The fauna inhabiting the RFP and its buffer zone consists of species associated with western prairie regions. The most common large mammal is the mule deer (Odocoileus hemionus), with an estimated 100 to 125 permanent residents. There are a number of small carnivores, such as the coyote (Canis latrans), red fox (Vulpes fulva), striped skunk (Mephitis mephitis), and long-tailed weasel (Mustela frenata). Small herbivores can be found throughout the plant complex and buffer zone, including species such as the pocket gopher (Thomomys talpoides), cottontail (Sylvilagus sp.), white-tailed jackrabbit (Lepus townsendii), and the meadow vole (Microtus pennsylvanicus) (DOE, 1980).

Commonly observed birds include western meadowlarks (Sturnella neglecta), horned larks (Eremophila alpestris), mourning doves (Zenaidura macroura), and vesper sparrows (Pooecetes gramineus), western kingbirds (Tyrannus vociferans), black-billed magpies (Pica pica), American robins (Turdus migratorius), and yellow warblers (Dendroica magnolia). Killdeer (Charadrius vociferus), and red-winged black birds (Agelaius phoeniceus) are seen in areas adjacent to ponds. Mallards (Anas platyrhynochos) and other ducks (Anas sp.) frequently nest and rear young on several of the ponds. Common birds of prey in the area include marsh hawks (Circus cyaneus), red-tailed hawks (Buteo jamaicensis), ferruginous hawks (Buteo regalis), rough-legged hawks (Buteo lagopus), and great horned owls (Bubo virginianus) (DOE, 1980).

Bull snakes (Pituophis melanoleucus) and rattlesnakes (Crotalus sp.) are the most frequently observed reptiles. Eastern yellow-bellied racers (Coluber constrictor flaviventris) have also been seen. The eastern shorthorned lizard (Phrynosoma douglassi brevirostre) has been reported on the site, but these and other lizards are not commonly observed. The western painted turtle (Chrysemys picta) and the western plains garter snake (Thamnophis radix) are found in and around many of the ponds (DOE, 1980).

Two procedures which concern identification and management of threatened and endangered species at RFP currently are being prepared by the EG&G National Environmental Policy Act (NEPA) Group. These are the draft "Identification and Reporting of Threatened and Endangered and Special ConcernSpecies," administrative procedure NEPA.12, Rev. 0, and the draft "Protection of Threatened and Endangered and Special Concern Species," operations procedure FO.21, Rev. 0.

2.2 SITE HISTORY AND ENFORCEMENT ACTIVITIES

Past and current waste handling practices at the Rocky Flats Plant dictate that environmental restoration at the facility be conducted in accordance with two environmental laws: the Resource Conservation and Recovery Act

(RCRA) as amended by the Hazardous and Solid Waste Amendments Act; and the Comprehensive Environmental Response, Compensation and Liability Act (CERCLA).

RCRA regulations apply to currently operating hazardous waste treatment, storage and disposal facilities, and the RCRA corrective action provisions are implemented to remediate releases of hazardous materials from these facilities. CERCLA regulations apply when hazardous substances have been released from abandoned or uncontrolled hazardous waste sites as well as releases at federal facilities. CERCLA regulations also apply to releases from operating facilities that may pose a threat to human health and/or the environment. DOE, EPA, and the State of Colorado signed a Federal Facilities Agreement (also known as the IAG) under both RCRA and CERCLA which governs the environmental restoration activities at RFP, including this IRA. The environmental restoration activities at the RFP fall under the jurisdiction of both laws.

The SEPs are RCRA interim status regulated units that are currently undergoing partial closure activities. Leakage from the ponds has contaminated soils and ground water with nitrates, heavy metals, and radioactive material. A closure plan submitted to the regulatory agencies on July 1, 1988, called for in-place closure of contaminated liners and subsoils. A proposal was submitted to the regulatory agencies in February 1989 to modify the closure plan for removal of contaminated liners and subsoils to achieve residual contaminant concentrations protective of human health. Closure activities include: dewatering the impoundments; removing, solidifying, and disposing the pond sludges and sediments at the Nevada Test Site; capping the area with a RCRA cap; and collection and treatment of contaminated ground water (Rockwell International, 1988).

This IM/IRA will facilitate the dewatering of the impoundments and allow closure activities to fulfill the intent of the AIP.

2.3 SUMMARY OF CONTAMINANTS ASSOCIATED WITH THIS IM/IRA

The scope of this IM/IRA is limited to the managing and treatment of liquids contained in ponds 207-A, 207-B North, 207-B Center, 207-B South, and the water collected by the ITS. Pond 207-C is not included in this IM/IRA because the pond does not require dewatering.

Detailed characterizations of the pond wastes were performed during 1986, 1987, 1988, and 1991. A selected summary of these characterizations is included in Tables 2.1 through 2.5 of this document. The tables are a compilation of the analytical results from 1986-1991. A complete listing of analytical data is contained in Appendix C.

At present, Pond 207-A is nearly empty and contains water transferred from the 207-B series ponds, and water derived from incident precipitation (Rockwell International, 1988). Pond 207-A was completely cleaned of sludge and water in 1988.

2.3.1 Ponds 207-B North, Center, and South

Ponds 207-B North, Center, and South contained process wastes until 1977 when the ponds were cleaned and the linings replaced. Waste materials from these ponds were disposed of at an off-site low level radioactive waste disposal site. Since 1977 these ponds have held treated sanitary effluent, treated water from the reverse osmosis facility, backwash brine from the reverse osmosis facility, and ground water pumped back from the SEPs' ITS. Ponds 207-B Northand Center generally have low concentrations of nitrates, metals, and radionuclides. Nitrate concentrations in the pond liquids were at or below drinking water standards during the same time period (Rockwell

International, 1988). All 207-B ponds are currently used to store intercepted water collected by the ITS north of the ponds.

2.3.2 Pond 207-C

Pond 207-C was constructed to provide additional storage capacity and to enable the transfer and storage of liquids from the other ponds while the latter were repaired. Pond 207-C is not included in this IM/IRA because the entire contents of the pond will be solidified. The data in Table 2.5 is presented for informational purposes only.

2.3.3 Interceptor Trench System (ITS)

The ITS was constructed on the hillside north of the SEPs to prevent natural ground water seepage and pond leakage from entering North Walnut Creek. Water collected in the system flows by gravity to the ITS pump house and currently is pumped to the 207-B ponds.

Sampling station SW-095 is located within the wet well of the ITS pump house and is representative of the water quality which is currently pumped to the 207-B ponds. A summary of ITS water quality is contained in RFEDs and the data is currently being validated. A summary of select analytical data of ITS water quality (SW-095) is presented in Table 2.6. The complete data for SW-095 is included in Appendix A.

Water quality analyses of ITS water indicate the presence of inorganic constituents (particularly nitrate), radionuclides, and sporadic detections of low-level volatile organic compounds (VOCs). Inorganic constituents and radionuclides are typically present in the general solar pond area and are present in both ground water and seepage flows. Sporadic VOCs detections are thought to be predominately contributed by the flow from the West Collector of the ITS. The West Collector intercepts ground water flow, surface runoff, and flow from the Building 774/771 drain area (ASI, 1991).

2.4 COMMUNITY PARTICIPATION

In accordance with the Interagency Agreement (IAG), DOE has prepared this IM/IRA Decision Document to allow the public an opportunity to review and comment on the selected remedy.

DOE will open a 60-day comment period. DOE will hold a public hearing on this Proposed IM/IRA Decision Document, if requested to do so by the public, EPA or the State. The Proposed IM/IRA Decision Document is a concise document that (a) indicates the objective of the IM/IRA; (b) discusses the selected remedy; (c) provides the rationale for the selected remedy; (d) presents an ARAR analyses, and; (e) discusses how the interim remedy selected will beconsistent with the final remedy for the OU4.

After receipt of EPA, State and/or public comments concerning the Proposed IM/IRA Decision Document, DOE will prepare a Final IM/IRA Decision Document for EPA and State review and approval in accordance with paragraph 150 of the IAG, which will include a response to comments received. As stated in the IAG, "DOE will not commence any remedial/corrective activities associated with an IM/IRA until EPA and the State have approved the Final IM/IRA Decision Document and Responsiveness Summary." DOE will make the EPA and State approved Final IM/IRA Decision Document and Responsiveness Summary available to all interested parties 10 days prior to commencing the operation of remedial/corrective activities associated with the IM/IRA.

The Final Decision Document for this IM/IRA will include deadlines for imple mentation of the IM/IRA and shall be supported by the Administrative Record. The supporting Administrative Record shall be consistent with CERCLA and shall include, but not be limited to, significant facts and studies supporting the initial decision to conduct this IM/IRA, all comments

received concerning the final decision on the action, EPA and State comments concerning the IM/IRA, and the DOE response to those comments.

2.5 SCOPE AND ROLE OF THE IM/IRA

The Solar Evaporation Ponds are currently undergoing partial closure activities. Water collected by the ITS is currently discharged into the 207-B ponds. The ponds (except for 207-C) must be dewatered to a state which will allow the removal of the sludges for solidification into pondcrete. In order to facilitate the dewatering of the ponds in an expedited fashion the addition of ITS water must cease. Therefore, storage and treatment of the intercepted water and treatment of excess pond liquids must occur in an alternate fashion. The most effective means of storage of the intercepted water is storage in temporary tanks. The most effective means of treatment of the excess pond liquids and the intercepted water is through the use of three portable flash evaporators. A complete description of the process is included in Section 3.0 of this document.

This IM/IRA is intended to be consistent with the final remedy for the Solar Evaporation Ponds. In fact, if the three portable flash evaporators and temporary surge tanks are not installed and operated, the removal and solidification of the sludges into pondcrete cannot occur. The removal of liquids and sludge is required to fulfill the intent of the AIP, which states, "several past disposal sites (i.e., solar ponds) on the plant pose a high risk for further spread of contaminants into surface water, ground water and the soil. The ... site(s) require(s) special and accelerated actions by the DOE." Such actions will be performed in full compliance with state and federal environmental laws (DOE, 1989b).

2.6 SUMMARY OF SITE RISKS

The OU4 IM/IRA is intended to facilitate implementation of the SEPs' partial closure actions and to stabilize the operable unit by removing the source materials. As such, the IM/IRA is being taken as an enabling activity to facilitate pondcrete operations, site closure, and remedial action. The proposed actions are not being taken in response to Agency guidance which directs interim actions to be taken in response to an immediate site threat to or to take advantage of an opportunity to reduce site risk quickly (EPA, 1991a).

The implications of this determination affect the summary of site risk to be performed below. In a July 12, 1991 letter, CDH and EPA provided guidance to DOE for issuing the Proposed Decision Document for this IM/IRA. This guidance instructed the Summary of Site Risks to "focus on the risks that the interim action is intended to address and should provide rationale for the limited scope of the action." As indicated above, the IM/IRA is not beingproposed in response to site hazards. The action is being proposed as an enabling activity to facilitate pondcrete operations, site closure, and remedial action. The Summary of Site Risks will focus on the potential public health and environmental health impacts associated with operation of the flash evaporator system.

A key assumption of this pathway-based qualitative risk assessment is that the ground water pathway is not complete. This is a matter of fact that should be taken into consideration regardless of the presumed efficiency of the collection system (ITS). Specifically, there currently is no human receptor exposed to ground water containing contaminants released from the SEPs. This is because the plume is contained on the RFP. As a result, there are no domestic users of ground water in the vicinity of the SEPs contaminant plume. Additionally, the distance from the SEPs to the nearest potential receptor is very significant which suggests a low probability that contaminated ground water from the SEPs would be available for a human to access in any reasonable foreseeable time. Municipally supplied domestic

water is readily available in the vicinity of RFP. Since no drinking water is available, the assessment that exposure to contaminants emanating from the SEPs via a ground water pathway is improbable.

The information provided in this section is included for the general understanding of the site risks, and are not quantifiable statements. It is not the intent of this paragraph to imply that the IM/IRA will characterize and remediate all ground water contamination which originated from the SEPs. As stated previously, characterization of the ground water/surface water interrelations shall be performed during the RFI/RI activities.

Whatever the ITS efficiency, implementation of the proposed IM/IRA will not significantly alter the ground water pathway relative to potential human exposure. Assuming 100 percent efficiency of the ITS is lessimportant than the suggestion that the ground water pathway is incomplete. Additionally, future and more detailed risk assessment evaluations both qualitative and quantitative will be performed in the continuing Phase I and Phase II evaluation/investigations of the SEPs (OU4).

2.6.1 Pathway Exposure Assessment

The conceptual environmental exposure pathway resulting from the proposed IM/IRA is provided in Figure 2-7. Pertinent features of the exposure pathway include:

- Case A: This block model illustrates the primary exposure pathway associated with conditions as they currently exist. This includes two principal exposure pathways. Pathway A1 is the ground water contamination exposure route. As indicated on Figure 27, there is no contaminant receptor; rather, ground water is intercepted in the interceptor ditch and returned to the SEPs (Pond 207-B). Case A also includes an air pathway (A2) by which compounds can be released from the SEPs and distributed by airborne transport to offsite receptors, workers, or ecological receptors. Pathway A2 is considered to be a negligible exposure mechanism because of the (1) very low contaminant concentrations in the pond waters, (2) the small flux of contaminants released from the pond waters, and (3) the large dispersion and dilution factors associated with airborne transport.

- Case B: Case B conceptually illustrates how the proposed IM/IRA will modify the primary pathway (Case A) through introduction of a secondary pathway. The secondary pathway truncates the recirculation loop and shunts the contaminated ground water from the interceptor ditch to the flash evaporator system. The secondary pathway introduces a new exposure pathway (B1) which originates at the flash tank. Volatile and possibly nonvolatile compounds may be "flashed" (vaporization or particulate aerosolization) as they encounter the pressure differential of the flash tank. Once released, aerosolized compounds can enter the atmosphere by passing through the system vent apparatus. Once in the atmosphere, aerosolized compounds could be transported to off-site receptors, nearby workers, or ecological receptors in the immediate vicinity by dispersion in the atmosphere.

A very important physical system that is included as a design feature of the IM/IRA that interrupts the secondary pathway is not featured on Figure 2-7. This is a high efficiency particulate air (HEPA) filter on the system vent to remove any aerosolized particulate matter before discharge to the atmosphere.

A review of Figure 2-7 indicates that only pathways A2 and B1 are potentially complete. As discussed above, neither potentially complete pathway is expected to present an appreciable exposure source to the off-

site public, workers, or ecological receptors.

2.6.2 Chemicals of Concern

The SEPs, as indicated on Figure 2-7, are the source of chemical compounds that may enter any of the exposure pathways. Chemicals of concern (COCs) (from Tables 2.1 through 2.5) are the compounds that would most likely present significant human health hazards in the event that sufficient exposure conditions and concentrations were met. A review of available analytical data suggests that very few compounds, characteristic of the SEPs, are notably toxic to humans. Additionally, those compounds that could potentially pose a human health threat are generally at very low concentrations. A brief discussion of potential COCs follows.

The potential contaminants of concern for this qualitative assessment can be summarized as: (1) certain radionuclides such as Pu[-239] and Am[241], (2) certain heavy metals such as beryllium, cadmium and chromium, and (3) a limited number of VOCs such as carbon tetrachloride and trichloroethylene.

2.6.2.1 Radionuclides

Pu[-239] and Am[-241] have been detected in the SEP waters. Aqueous concentrations of Pu[-239] of 0 to 660 pCi/l have been reported. Am[-241] has been detected at 200 pCi/l. Additionally, tritium and uranium have been detected in waters from the SEPs.

2.6.2.2 Metals

Metals, including beryllium, cadmium and chromium have been detected in the SEP waters at concentrations greater than background. Aqueous concentrations (from Tables 2.1 through 2.5) reported for some metals associated with the solar evaporation ponds are listed below:

2.6.2.3 Organics

Organic chemicals have been reported occasionally in samples (near the detection levels) obtained from the ITS water. The data does not show consistent occurrence of organics. Organics reported to occur infrequently that are notable from a human health perspective include carbon tetrachloride and trichloroethylene. Other organics (such as phenols) occur sporadically and are also in low concentrations in the data. This occurrence does not suggest that they should be considered as COCs. Sporadically occurring detections of organics have been used in this risk assessment, therefore this assessment is considered conservative.

2.6.3 Toxicity Assessment

The groups of compounds identified as contaminants of concern have the potential for producing adverse health effects in humans under certain conditions of exposure. A brief summary of the more relevant human toxicity information on the groups of compounds identified as contaminants of concern follows.

2.6.3.1 Radionuclides

EPA regards radionuclides as human carcinogens. Normally, carcinogenicity is the principal human toxicity concern.

2.6.3.2 Metals

Heavy metals, such as those associated with the SEPs, are reported to produce systemic toxic effects in humans. Additionally, EPA regards some heavy metals (e.g., beryllium, cadmium, chromium) as possible human carcinogens.

2.6.3.3 Volatile Organics

VOCs such as those associated with the ITS water, are reported to produce systemic toxic effects in humans. Additionally, EPA regards some VOCs

(e.g., carbon tetrachloride and trichlorethylene), as possible human carcinogens.

The qualitative pathway model employed in this analysis indicates that neither exposure concentration or duration of exposure would be sufficient to produce adverse health effects from chronic exposure.

2.6.4 Risk Characterization

From a qualitative perspective, operation of the flash evaporator system will not introduce any additional risks to workers or the off-site public nor will it appreciably reduce the existing site risks. Observations that support this evaluation are:

- There is no complete ground water pathway (see Figure 27). Rerouting contaminated ground water to the flash evaporator system does not affect the risk associated with exposure pathway A1.

- The potentially completed airborne pathway from the SEPs to off-site receptors and workers (exposure pathway A2) will be truncated as a result of implementation of the IM/IRA. This is because, as recirculation of contaminated ground water (back to the SEPs) ceases, the source term (i.e., SEP water) will diminish. As the source term diminishes, the potential for exposure to contaminants through the airborne pathway will also decrease. As notedpreviously, exposure pathway A2 is considered to be a negligible source of exposure to the off-site public and workers.

- Implementation of the IM/IRA introduces the secondary B2 pathway. Conceptually, this results in a translocation of the exposure pathway A2 to the flash evaporator system vents (see Figure 2-7). As noted previously, exposure pathway A2 is considered to be a negligible source of exposure to the off-site public and workers. The potential risks of this pathway are further reduced by application of the physical systems design feature of the IM/IRA that interrupts the secondary pathway. The HEPA system is capable of an approximately 99.9 percent removal efficiency for aerosolized particulates.

3.0 DESCRIPTION AND ANALYSIS OF SELECTED REMEDY

The selected remedy for this IM/IRA includes the use of temporary surge tanks and three portable flash evaporators. The "No Action" alternative was dismissed because the ponds must be dewatered in order to proceed with partial closure activities and final remediation of the ponds. Furthermore, the consequence of the "No Action" alternative is inconsistent with the AIP and IAG.

3.1 DESCRIPTION OF SELECTED REMEDY

The selected remedy is the use of three portable flash evaporators to accelerate the removal of liquids from the 207-A and 207-B SEPs. The three portable evaporators are also needed to treat water that is currently discharged into the 207-B Pond from the ITS located north of the ponds. In order to prevent additional accumulation of water in the 207-B Pond, temporary surge tanks will be built in the vicinity of the pond to hold the ITS water beforeit is sent to the three portable evaporators.

Water will be pumped from the ponds and the surge tanks to the three portable evaporator systems located within a building near the solar ponds (Building 910). The final concentrate from the evaporators will be cemented in the pondcrete and/or saltcrete processes to meet defense waste acceptance criteria for disposal of low level mixed waste. Distillate from the evaporators will be discharged into one of the three 7,000-gallon batch

tanks for sampling. Section 3.1.1.4 and Appendix B of this document explains the sampling and analytical requirements. Distillate exceeding the allowable conductivity limit (150 micro mho/cm) will be reprocessed. Distillate meeting the general characteristics of commercially available raw water will be reused as makeup water in the raw water or condensate systems on plant site. A 500,000-gallon tank will serve as a distillate holding tank from which water will be supplied on demand into the raw water or condensate systems.

3.1.1 Treatment System Components

Three mechanical/thermal forced evaporator systems will be installed. Each system consists of a vapor compression (VC) unit installed in series with a multiple-effect multiple-stage (MEMS) flash evaporator. The distillate from both the VC and MEMS is moved by differential pressure into a surge tank. The system, including VC and MEMS bodies is maintained at a vacuum by an eductor system which has as its motive force, the recirculation of distillate. During system operations over pressure protection is provided by a temperature sensor (which equates to saturation pressure) which shuts the entire unit down when temperature reaches 205 to 210 F. As a further precaution to prevent particulate air emissions from the system, the concentrate tank is vented to atmosphere via a HEPA filter, thus, there will be no contaminated air emission from these units.

Operators of the evaporation units will be formally trained and qualified. The training will include theory of operations, system components, principles of operations, system interrelationships, protective devices, and practical factors. The training and qualification will be validated in accordance with existing plant procedures.

3.1.1.1 Location and Equipment Description

Building 910, located south of Pond 207-B South, will be used to house the forced evaporation equipment. This building was originally constructed for a reverse osmosis (RO) system to treat RFP sanitary effluent.

The location of Building 910 and its existing tank storage capacity made it the optimal location for the evaporation equipment. Building 910 is a concrete structure with concrete floors and roof. On the main floor of Building 910, there are three rooms that will be used: the Process Room, Chemical Prep/Make-up Room and Operating Personnel Room. The lower level (basement) of Building 910 contains holding tanks, transfer pumps and ancillary equipment for the evaporator products. Some equipment in Building 910 is being stripped out to accommodate the evaporation equipment. All existing equipment that will be reused for the evaporation project will be inspected and/or tested.

Main Floor Building 910

Process Room: The Process Room is located at the west side of the main floor of Building 910. There will be three vapor compression (VC) units and three multiple-effect, multiple-stage (MEMS) flash evaporators centrally located. A duplex filter station, EDTA injection tank and nitric acid injection tank will be located at the northwest corner inside a bermed area. Three natural gas-fired generators located outside and east of Building 910 will provide electrical power to compressors, pumps and some ancillary equipment, and exhaust heat to the MEMS. All of the doorways into this room will have berms across them and the basement floors will be coated to provide secondary containment. See Figure 3-1 for the main floor layout. Both the main floor and lower level will be equipped with a wet fire suppression system.

Chemical Prep/Make-up Room: The Chemical Prep/Make-up Room is located at the main floor of the south corner of Building 910. The room contains the

nitric acid make-up tank and will be used for the pH adjustment. The east side of this room will be used as a general laboratory, containing nitrate analysis equipment, a pH and conductivity meter. The emergency showers and eye wash are located in this room. All of the doorways will have berms across them, and the floors will be coated with a sealant to provide secondary containment. See Figure 3-1 for the main floor lay-out.

Lower Level Building 910

Six existing tanks on this level will be used as temporary holding tanks for the evaporation products. These tanks will be structurally and seismically qualified for the new application. All six tanks have been inspected for RCRA compliance in accordance with 6 CCR Section 265-191 and for seismic qualification by a qualified professional engineer. Required actions have been incorporated into the installation plan and certification will be issued when the installation has been completed. The distillate will be held in Tanks D-2, D-6, and D-7. The concentrate (brine) from the MEMs units will be held in Tanks D-9 and D-18. Tank D-10 will be used as a surge tank for the distillate system. In addition, a new 600 gallon stainless steel tank D-50 will be used for brine flushing. Pumps for recirculation and transfer of materials will be located on this level. The floor and sump of the lower level will be coated with a sealant to serve as secondary containment for all the equipment within the building. The sump will have one layer of 60 mil high density polyethylene liner on top of the sealant leak detection device. The sump will be lined to meet the requirements of 6 CCR 1007-3 and piping will ensure sump liquids are not discharged outside the containment of Building 910. The containment volume will be 110 percent of the volume of the largest tank located within Building 910. See Figure 3-2 for the lower level floor lay-out.

Auxiliary Equipment

Each of the 207-A and 207-B Solar Ponds will have a pump inside the Pond berm connected to a double containment pipe with leak detection to supply water to the evaporators.

A 2500 gallon stainless steel tank located north of the building 910 will be used to hold scale inhibitor EDTA.

Tank 215-D, which has a capacity of 500,000 gallons, is located to the west of Building 910, north of Building 928. This tank will be used as a holding tank from which the distillate will be supplied on demand into the raw water or condensate systems.

A 500-gallon stainless steel tank located to the east of building 910, will be used to hold nitric acid for pH adjustment.

Three portable cooling towers, which will provide cooling water to the three portable evaporation system, will be located to the north of Building 910.

3.1.1.2 Process Description

A conceptual flow diagram of the three portable evaporators is provided in Figure 3-3. The water from Pond 207-A and Ponds 207-B North, Center, and South and ITS water will be pumped via a double-pipe transfer line which will connect to a manifold station equipped with duplex strainers and duplex filters. The duplex strainers will trap the material of a size that cannot pass through 1/8" to 3/16" perforations. An in-line 100 micron duplex filter will trap the sediments that occasionally are picked up by the transfer pumps. The strained and filtered material will be handled as low level mixed waste as specified by existing RFP waste guidance. The brine produced by the VC unit will be fed to the preheater of the MEMS flash evaporator. The preheated pond water or ITS water will be fed to the VC unit for evaporation. The distillate will be collected from the VC unit and

the MEMS flash evaporator unit into two separate small surge tanks. From the surge tanks, distillate below a conductivity of 150 micro mho/cm will be discharged into one of three 7,000-gallon batch tanks. Distillate exceeding 150 micro mho/cm will be recycled, by a solenoid operated valve actuated by the conductivity probe, back to the feed stream for reprocessing. An automatic composite sampling process will be initiated at the beginning of discharge into the 7000 gallon batch tanks. When the accumulated distillate level reaches the highlevel setpoint on the batch tank, the composite samples will be collected and sent to the laboratory for analysis as specified in the Waste Analysis Plan (WAP). Sections 3.1.1.3 and 3.1.1.4 of this document explains the sampling and analytical requirements in detail. The distillate will then be transferred to the 500,000-gallon distillate holding tank 215D. From Tank 215D, the distillate will be injected into the Raw Water System for plant cooling tower usage on a demand basis. The concentrate from the MEMS flash evaporator will be collected in holding tanks before being transferred to the pondcrete cementation process or Building 374 saltcrete process. A composite sample of the concentrate will be manually collected for analysis as specified by the pond sludge solidification process or the saltcrete process as applicable.

Process Performance

Each portable evaporator system (VC unit in series with MEMS flash evaporator) has a designed output of 18,000 gallons per day. There are three identical systems installed in parallel so that an operator can operate any combination of the three systems simultaneously. The system will be capable of producing a product water quality of 150 micro mho/cm or better and meeting general characteristic of commercially available raw water. The Waste Sampling Plan in this document (Appendix B) provides the specific

constituents to be analyzed and the acceptable action levels. Final concentrate produced will be controlled to reach a total dissolved solids (TDS) level ranging between approximately 300,000 ppm and 400,000 ppm.

Logistics of Pond Water Removal

The three portable evaporator systems will have the capability to treat the water from one pond or a combination of ponds. However, neither treated pond water nor byproduct from the evaporator will be returned to any of the four ponds after the initial verification process has been completed. During initial verification, the water may be discharged to the pond from which it came.

Distillate Disposition Plan

Upon approval of analytical results from the acceptance phase, distillate will be produced on a production basis and will meet all performance specifications of the WAP prior to being transferred to the Tank 215-D (500,000 gallon capacity). From there, the distillate will be pumped into the Raw Water header on a demand basis by a centrifugal pump. The distillate pumped into the Raw Water Header will be used by plant cooling towers. The cooling tower blow down stream will be discharged to the Sanitary Treatment Plant of RFP.

The distillate from tank 215-D may be used as plant boiler feed water when the cooling tower demand falls. For use as feed, operations will pump the distillate into the condensate return receiver which is located in Building 910. This will allow the distillate to be discharged into the 300,000 gallon condensate tank located in Building 443 for supply of boiler feed water.

Concentrate Disposition Plan

The concentrate will be collected in the concentrate holding tank before being transferred to the pondcrete cementation process or to the Building

374 saltcrete cementation process by a tanker truck.

Flow, Level and Spill Control
The main feed stream, final distillate stream, and the final concentrate streams will be monitored for flow rate and will have a continuous flow indication of the total volume transferred. All collection tanks and holding tanks will be equipped with a high level alarm control and an automatic pump shut off to prevent overflow of liquid. The 500,000-gallon distillate holding tank 215D will not have secondary containment, because distillate held in Tank 215D has been proven to meet the "re-use" criteria as stated in the WAP (Appendix B) and thus there will be no release of contaminants that may threaten human life or the environment. Tank 215D will be equipped with a high level alarm and a secondary high level alarm. The high level alarm alerts the operators to stop evaporation. The secondary high level alarm will automatically shut down the transfer pumps that feed into the 500,000-gallon holding tank.

3.1.1.3 Sampling and Analytical Requirement
The purpose of the sampling plan is to ensure the distillate will be an effective substitute for water used in the raw water system and therefore demonstrate that the distillate would have no adverse impact on the quality of the water discharged from the plant or emitted from cooling tower.

Detailed characterization of pond water was recently performed and the data is presented in Tables 2.1 through 2.6. All analytical procedures follow EPA SW-846 methods. Level IV, which is characterized by rigorous QA/QC protocols and documentation, was used for analysis of all constituents. This level provides legally defensible qualitative and quantitative data. The constituents analyzed consisted of the parameters currently measured during the monthly sampling of the Building 374 evaporator distillate and the parameters required for sampling of water discharged from the plant. Distillate from the 374 evaporator is currently reused in the building 374 cooling tower. The WAP detailed in Appendix B implements the necessary actions to ensure that the distillate from these portable flash evaporators will also be an acceptable substitute for raw water.

3.1.1.4 Waste Analysis Plan (WAP)
The foundation for the development of the WAP is the characterization data presented in Tables 2.1 through 2.5 for the Solar Ponds and Table 2.6 for the ITS waters. Constituents not found within the characterization reports have been deleted from the WAP.

3.1.1.5 Facility Safety Features
Fire Protection and Safety Equipment
There will be a new wet fire suppression system installed to cover the entire building. Approximately five fire extinguishers will be provided throughout the entire building. Fire phones, safety shower(s) and eye wash equipment will be located to adequately provide for personnel safety protection.

Alarms
The following is a list of the alarms for both the process and personnel:

Process

- Over temperature alarm(s) - Audible, Visual
- High/low level alarm(s) - Audible, Visual
- Power overload alarm(s) - Audible

- Loss of vacuum alarm(s) - Audible, Visual
- Low flow alarm(s) - Audible, Visual
- Conductivity level high alarm(s) - Visual.

Personnel
Fire alarm - Audible, Visual

Inspection
Inspection requirements of the facility will comply with the appropriate procedures for operation of the system. Tanks containing RCRA regulated waste will be included in the Plant Assessment/Surveillance Program.

Operating Procedures
Operation of all equipment in this facility will follow the appropriate procedures. Procedures will be completed at the completion of equipment installation. Final walkdown of the procedures and revalidation will occur prior to equipment operation. The following is a list ofprocedures that will be implemented prior to equipment operation.

- WO-2210 Systems Line-up
- WO-2211 Chemical Makeup System
- WO-2212 Feed System
- WO-2213 Evaporator System 1
- WO-2214 Evaporator System 2
- WO-2215 Evaporator System 3
- WO-2216 Distillate System
- WO-2217 Concentrate System
- WO-2218 Abnormal/Emergency Response
- Alarm Response Procedure
- Site Specific Health and Safety Plan

Spill Response
The spill response will be in accordance with the plant spill response procedure as contained in the Hazardous Waste Requirements Manual 1-10000HWRM.

Personnel Training
Rocky Flats personnel assigned to operate the Building 910 evaporators will receive the following training:

- Rocky Flats core and area-specific training
- 40-hour OSHA
- Annual RCRA Training
- On-the-Job training provided by the evaporator manufacturer during the initial trial run

- Job-specific training to include theory of operations, system components, principles of operations, system interrelationships, protective devices, and practical factors.

3.1.2 Storage Components

Water collected by the ITS is currently returned to the 207-B ponds(primarily the North impoundment). To allow pond dewatering to proceed, the ITS water will be held in three temporary surge tanks.

3.1.2.1 Location of Tanks

The three temporary surge tanks will be located well within the plant's buffer zone, north of the SEPs (see Figure 3-4).

The proposed site is not located within the 100-year floodplain, wetlands, a saltdome formation, underground cave or mine, or within 200 feet of a fault displaced by a Holocene Fault. The proposed site is not an area of known contamination and is not within a solid waste management unit. Furthermore, the proposed site would have no impact on known archaeological or historic resources and is not expected to affect the black-footed ferret or the bald eagle (DOE, 1991b).

Excavation and grading will be required to prepare the site for the temporary tanks. The site will be graded according to specifications as established in the geotechnical study of the proposed site. Excavation permits will be reviewed and approved by appropriate environmental management staff prior to any work on this site. Measures will be implemented for erosion control and soil stabilization and to facilitate restoration of the pads after the tanks are removed.

3.1.2.2 Equipment Description

Each tank will have a capacity of approximately 500,000-gallons and will be constructed of galvanized steel and high-density polyethylene (HDPE). Each tank will be approximately 112 feet in diameter with

10 foot galvanized steel sidewalls. The bottom and inner sidewalls will be double-walled with HDPE (see Figure 3-5).

The temporary holding tanks and ancillary equipment will be designed, installed, and operated in accordance with the tank requirements of 6 CCR1007-3 Part 264, Subpart J. The tank systems will incorporate double-wall containment features and provisions for detection and removal of primary containment leakage (EG&G, 1991a).

The subgrade will be prepared and graded to allow any leakage to be collected at the leak detection sump. Non-earthen base material (i.e., concrete and/or asphalt) will be placed over the subgrade to provide structural support for the base of each surge tank. A 100-mil geotextile will be placed over the concrete/asphalt base to protect the secondary wall from punctures or abrasions. A 80-mil HDPE secondary wall will then be placed over the geotextile. A HDPE geonet will be placed over the secondary wall to allow any leakage through the primary wall to be immediately collected in the leak detection sump. A 80-mil HDPE primary wall will then be placed over the geonet. In addition, a 20-mil HDPE liner will be placed over the primary wall to protect the primary wall from ultraviolet degradation. The leak detection sump will be located in the middle of each tank and will incorporate below grade piping to a standpipe located outside the tank which will allow the immediate detection of any leakage through the primary wall. The standpipe will be provided with a sensing device. In the event leakage occurs, an alarm will sound in Building 374 which is continuously manned 24 hours a day. If a valid leak occurs, the contents of the tank with the leak will be pumped to another tank. At least one tank

will remain empty to provide this capability.

Water will be pumped from the existing ITS pump house to the tanks and then from the tanks to the three portable evaporators via double-walled piping. Above ground piping will be made of polyvinylchloride and underground piping will be made of polyethylene. All exposed portions of the piping will be heat-traced, insulated, or drained for freeze protection.

In order to prevent overfilling, each holding (surge) tank will beequipped with a high level and low level alarm. The high level alarm will activate when there is approximately 2 feet of freeboard remaining in the tank(s). The freeboard capacity will allow approximately 15 hours of normal fill time. Upon activation, the high level alarm will automatically shut down the feed pumps and begin pumping excess water to an adjacent surge tank which is not full. In addition, the alarm signal will be sent to Building 374 which is continuously manned 24 hours a day.

3.1.3 General Components

3.1.3.1 Quantity of Waste to be Treated

The largest volume solar evaporation pond (Pond 207-A) contains approximately 3 million gallons of water to be evaporated to allow pondcreting of sludges to occur. The 207-B ponds contain a total of approximately 5 million gallons of water to be evaporated. The collected ITS water, which will be stored in the temporary surge tanks and will be a continuing source of water, will require treatment through the evaporator system. The average amount of water collected by the ITS over the course of a year is estimated to be 4 million gallons, based on observations made in 1987.

As previously mentioned, each portable evaporator system has a design output of 18,000 gallons per day. Therefore the utilization of all three systems would have a treatment capacity of 54,000 gallons per day.

3.1.3.2 Treatability Testing

Treatability tests were performed using the proposed treatment system by LICON, Incorporated of Pensacola, Florida (LICON, 1990). In that LICON was not an authorized recipient of pond water, tests were conducted using surrogate pond water. Tests were conducted with feed supply prepared to simulate each of the four SEPs. The surrogate feed supplies were prepared based on the major ions contained in their respective ponds.

Test results indicated that the 10,000 ppm total dissolved solids feed supply (pond average) could be reduced to 1/50th of its present volume and produce an excellent quality of distillate averaging less than 75 mhos/cm. According to recent pond water detailed characterization results, the heavy radionuclides such as U, Pu, and Am detected, are at a treatable level with a high performance type of demister pad. Although tritium was detected, the level was well below established drinking water standards.

A trial run (acceptance phase) of the installed system will be conducted and evaluated prior to full-scale operations. The trial run period will include extensive sampling and analysis of the distillate per the analysis plan. This trial run and testing period will also be used to adjust operations and train operators.

3.1.3.3 General Inspections

Inspections of the storage and treatment operations will be conducted in accordance with the applicable requirements of 6 CCR 1007-3 Part 264, standard plant operating procedures, and as needed. Specific inspection schedules and record keeping procedures will be developed and implemented prior to initiating operations. Inspections will be conducted at a

frequency which identifies problems in time to correct them, prevents human health and environmental hazards, and ensures safe working conditions.

During operations:

- Tank leak detection systems
- Level of water and freeboard in the tanks
- Ancillary equipment
- Above-ground tank equipment (piping, valves, etc.)
- Structural integrity of the tanks
- Area surrounding the tanks
- Loading and unloading areas of hazardous waste.

Other items to be inspected will include, but not be limited to:

- Operating and structural equipment
- Safety and emergency equipment
- Monitoring equipment
- Security devices
- HEPA filters.

3.1.3.4 Management of Waste

As mentioned previously, the concentrate generated by the evaporator system will be collected in the concentrate holding tank and will also be sampled for waste characteristic data before being transferred to either the pondcrete cementation process or to the saltcrete process.

The distillate (water) generated by the evaporator system will not constitute a solid and hazardous waste because it will be used or reused as an effective substitute for a commercial product. Therefore, the distillate is not a waste based on the commercial product exclusion contained in 6 CCR 1007-3 Part 261.2 (e)(ii). The distillate (water) will be used or reused as an effective substitute for commercially available water that could or otherwise would be purchased from the Denver Water Board (DOE, 1989a).

3.1.3.5 Institutional Controls

This IM/IRA will be conducted entirely within the Rocky Flats site boundary. Since current security controls (i.e., access control, fencing, etc.) do not allow the general public into the area of this IM/IRA, additional institutional controls are not warranted.

3.1.3.6 Assumptions, Uncertainties and Contingencies

As detailed in the process description for the evaporator system, distillate not meeting specified quality requirements will be recirculated for additional treatment. In the event that specific quality requirements are not obtained by the proposed system, additional treatment units will be evaluated and incorporated into the treatment system as needed to meet or exceed performance requirements.

Each temporary surge tank will be equipped with a leak detection system. If a valid leak is detected, the tank contents will be transferred to an

adjoining tank. In the unlikely event that a catastrophic failure of a tank occurs, the released water would flow into North Walnut Creek. Much of the water would percolate back into the ground water system. The remainder would be contained in Pond A-3 because ponds A-1 and A-2 are not tributary to Walnut Creek. Sampling of Pond A-3 would then occur. If so determined, the water could be collected and transferred to one or both of the remaining tanks or transferred to the SEPs.

3.1.3.7 Closure of IM/IRA Structural Components

It is anticipated that the temporary surge tanks will be utilized at least into 1995. The tanks may be utilized as part of the initial action that may be required following the Phase I RFI/RI source and soils characterization as defined in the IAG. The temporary tanks will then be replaced by permanent tanks if deemed appropriate. The temporary tanks and ancillary equipment will be closed in accordance with the closure requirements of 6 CCR 1007-3 Part 264, Subpart G.

3.1.4 Costs

The estimated total cost to conduct this IM/IRA is $8,017,000. A breakdown of the estimated capital and operating and maintenance costsassociated with this IM/IRA are included in Table 3.1. This cost is only for the water evaporative efforts and does not include the cost of processing the pond sludge into pondcrete.

3.1.5 Remediation Goals and Performance Standards

The overall goal of this IM/IRA is to remove the liquids from SEPs (207-A, 207-B North, 207-B Center, and 207-B South) as expeditiously as possible in order to be able to remove and solidify the remaining sludges.

An associated goal is to implement a means to store and treat water collected by the ITS which does not include the use of the SEPs.

The proposed site for the three temporary surge tanks complies with all applicable siting criteria. The proposed site for the temporary tanks is not located within the 100-year floodplain, wetlands, a saltdome formation, underground cave or mine, or with 200 feet of a fault displaced by a Holocene Fault. The proposed site is not an area of known contamination and is not within a solid waste management unit. Furthermore, the proposed site would have no impact on known archaeological or historic resources and is not expected to affect the black-footed ferret or the bald eagle (DOE, 1991b).

The principal compliance point is where the distillate enters the raw water system, specifically in the 7,000-gallon capacity batch tanks.

Numerical goals to be attained for the distillate include:

- The maximum contaminant levels (MCLs) as identified in 40 CFR Part 141 Subpart B with the exception of turbidity and microbiological contamination

- The surface water standards for Walnut Creek as identified in 5 CCR 1002-8, Section 3.8.6 (2), Table 2 - Site Specific Radionuclide Standards.

No numerical goals apply to the sludge concentrate. However, the concentrate will be managed within the pondcrete or saltcrete operations in accordance with RCRA regulations for hazardous waste treatment and storage facilities (6 CCR 1007-3 Part 264).

3.1.6 Proposed Schedule of Milestones

The proposed schedule has been established to allow the DOE to meet its IAG obligations for Operable Unit 4 and facilitate meeting commitments developed in the AIP. The proposed milestone schedule is provided in Table 3.2.

3.2 ANALYSIS OF SELECTED REMEDY

This section provides an analysis of the selected remedy in accordance with the NCP. The analysis consists of an assessment of nine evaluation criteria.

3.2.1 Overall Protection of Human Health and the Environment

The selected remedy has been assessed to determine whether it can adequately protect human health and the environment, in both the short- and long-term, from unacceptable risks posed by hazardous substances, pollutants, or contaminants present at the site by eliminating, reducing, or controlling exposures to levels consistent with the remediation goals. Overall protection of human health and the environment has considered the assessments of other evaluation criteria, especially long-term effectiveness and permanence, short-term effectiveness, and compliance with ARARs.

A summary of the site risks has been included in Section 2.6 of this document. This section assessed the potential risks to human health as a result of the flash evaporator (treatment) operation. The assessment indicated that the potential risks to the off-site general public and on-site workers would be negligible.

The implementation of this IM/IRA is not expected to pose any adverse effects to the environment. In fact, a consequence of this IM/IRA will allow the removal of potential contamination source material from the SEPs, thereby reducing the potential of further contamination of the underlying soils and ground water.

3.2.2 Compliance with ARARs

The selected remedy has been assessed to determine whether it attains ARARs under federal environmental laws and state environmental or facility siting laws or provides the grounds for invoking one of the waivers. The selected remedy will attain identified ARARs. Please refer to Section 4.0 of this document for a detailed discussion of ARARs. No waiver requests are expected at this time.

3.2.3 Long-Term Effectiveness and Permanence

The selected remedy has been assessed for the long-term effectiveness and permanence it affords along with the degree of certainty that the remedy will prove successful.

Long-term effectiveness and permanence is a key consequence of the selected remedy. The dewatering of the SEPs will allow the removal and solidification of existing sludge material to occur, thereby allowing closure activities to proceed in an expeditious manner.

The waste remaining after this IM/IRA will be the dewatered sludges left behind in the SEPs. The sludges will then be solidified in accordance with approved pondcrete operations. The removal of the liquids and sludges from the SEPs will benefit ground water quality in the long term, because the contamination sources will be removed.

The proposed treatment system and storage tanks are considered adequate and reliable to meet the objectives of this IM/IRA.

3.2.4 Reduction of Toxicity, Mobility or Volume through Treatment

The degree to which the selected remedy employs recycling or treatment that reduces toxicity, mobility, or volume has been assessed, including how

treatment is used to address the principal threats posed by the site.

The proposed mechanical/thermal forced evaporation system willsignificantly reduce the volume of waste currently contained in the SEPs. Approximately 8 million gallons of liquid will be treated from the ponds.

The removal of this liquid will allow the pondcrete process to occur, thereby reducing the mobility of contaminants in the underlying ground water by eliminating the source.

The evaporation system produces a distillate and a concentrate. The distillate produced will be of high water quality, suitable for use in the plant's raw water supply. The volume of waste concentrate produced is estimated to be 1/50 of the present pond volume.

3.2.5 Short-Term Impacts

The short-term impacts of the selected remedy has been assessed considering potential risks to the general public, workers and the environment.

The potential risks to the general public health and safety during implementation of this IM/IRA are considered minimal.

Volatile chemical emissions from the forced evaporators are expected to be insignificant, because volatile organic concentration in the ITS water have only been sporadically found near the detection limits. The forced evaporator process will be equipped with HEPA filters at the concentrate surge tanks thereby precluding the carry-over of radioactive particulate emissions.

The risk of a catastrophic failure of a temporary surge tank is considered minimal. In such an event, contingencies as per the Surface Water Management Plan are in place to prevent off-site migration of potentially contaminated water.

The potential risks to workers during implementation of this IM/IRA will be minimized to the maximum extent possible. Workers will be trained in and be required to comply with necessary health and safety procedures. Standard operating procedures will be developed for the evaporation process. Personnel protective equipment will be used in accordance with applicable procedures.

The potential environmental risks associated with the implementation of this IM/IRA are considered minimal.

3.2.6 Implementability

The ease or difficulty of implementing the selected remedy has been assessed by considering the technical feasibility, the administrative feasibility, and the availability of services and materials.

The technical feasibility to conduct this IM/IRA is considered very good. The construction and operation of the temporary surge tanks and the evaporator system will follow standard proven practices. Both the storage and treatment systems will be monitored in accordance with the WAP to ensure that the performance objectives are met. met. Equipment parameters will be logged and the logs retained at the facility. All RCRA tanks and the storage tanks will be included in the Plant Material Assessment Program. The treatment system can be adjusted or modified as necessary to meet the required performance standards.

No problems are anticipated relating to administrative feasibility of this IM/IRA. The necessary funds are available. Furthermore, this IM/IRA will

be conducted entirely on-site.

No problems are anticipated with the availability of the needed services and materials to construct and implement this IM/IRA.

3.2.7 Cost
The types of costs associated with the selected remedy have been assessed.

The costs associated with this action are considered necessary for the protection of human health and the environment, and to meet the intent of the IAG and AIP.

A breakdown of the estimated capital and operating and maintenance costs associated with this IM/IRA have been previously included in Table3.1.

3.2.8 State Acceptance
The assessment of State concerns will be made following the State's review and comment on this proposed IM/IRA Decision Document.

3.2.9 Community Acceptance
The assessment of community concerns will be made following the public comment period for this proposed IM/IRA Decision Document.

4.0 IDENTIFICATION AND ANALYSIS OF POTENTIAL ARARs

4.1 STATEMENT AND BASIS OF PURPOSE OF POTENTIAL ARAR ANALYSIS
The analysis of ARARs in Section 4.0 is a review of Potential ARARs for this IM/IRA only. ARARs are currently being negotiated and resolved by the DOE, EPA and CDH on a site-wide basis for the Rocky Flats Plant. Appendix D contains two documents, a letter/agreement dated August 22, 1989 from DOE to CDH concerning water recycling and reuse issues and an initially approved air emission permit number 91JE316(1) from CDH for the flash evaporators as outlined in this IM/IRA. These documents as agreed to by DOE, EPA and CDH are compliance related ARARs for this IM/IRA. Also, Maximum Concentrations Limits (MCL) for radioactive constituents as presented in Table 4-3 shall be observed as compliance ARARs for the IM/IRA.

4.2 SCOPE OF INTERIM MEASURES/INTERIM REMEDIAL ACTION
The overall objectives of this IM/IRA for the 207- Solar Evaporation Ponds and ITS is to facilitate pondcrete operations and to facilitate the closure of the 207- Solar Ponds. ARARs are used in defining the remediation goals for the interim action.

4.3 COMPLIANCE WITH APPLICABLE OR RELEVANT AND APPROPRIATE REQUIREMENTS (ARARs) AND PROTECTION OF HUMAN HEALTH AND THE ENVIRONMENT The NCP [FR Vol 55, No. 46, 8848; 40 CFR 300.430 (e)] requiresthat, in development of remediation goals, the following be considered:

1. ARARs

2. For systemic contaminants, concentration levels that will not cause adverse effects to the human population and sensitive subgroups over a lifetime of exposure

3. For carcinogens, exposure levels represent an upper bound lifetime cancer risk between 10[-4] and 10[-6]. The 10[-6] risk level is to be used as a point of departure when ARARs are not available or are not sufficiently protective because of multiple contaminants or multiple exposure pathways.

4. Factors related to detection limits

5. For current or potential sources of drinking water, attainment of Maximum Contaminant Level Goals (MCLGs) or Maximum Contaminant Levels (MCLs), if MCLGs are zero

6. Attainment of Clean Water Act (CWA) water quality criteria where relevant and appropriate.

The IAG, in paragraph 150, states "Interim Remedial Actions/Interim Measures shall, to the greatest extent feasible, attain ARARs." Also for interim actions, the NCP [40 CFR 300.430(f)] specifically notes that an ARAR can be waived if the action is to become part of the final remedy that will attain ARARs. It may not be practicable to attain all ARARs for this interim action and ARAR waivers or alternate concentration limits may be requested.

This section identifies and analyzes ARARs relevant to the solar evaporator ponds 207-A and 207-B and the surface and ground water from the underground ITS and discusses how the action will be protective of human health and the environment. This remedial action is considered an on-site IM/IRA to be administered under RCRA; therefore, both substantive and administrative requirements of the RCRA regulations (such as RCRA permitting requirements) apply. The CERCLA-based ARAR process for this IM/IRA is required under the IAG.

4.3.1 ARARs

"Applicable requirements," as defined in 40 CFR 300.5, means "those cleanup standards, standards of control, and other substantive requirements, criteria, or limitations promulgated under federal environmental or state environmental or facility siting laws that specifically address a hazardous substance, pollutant, contaminant, remedial action, location, or other circumstance found at a CERCLA site. Only those state standards that are identified by a state in a timely manner and that are more stringent than federal requirements may be applicable." "Relevant and appropriate requirements," also defined in 40 CFR 300.5, means "those cleanup standards, standards of control, and other substantive requirements, criteria, or limitations promulgated under federal environmental or state environmental or facility siting laws, that, while not "applicable" to a hazardous substance, pollutant, contaminant, remedial action, location, or other circumstance at a CERCLA site, address problems or situations sufficiently similar to those encountered at the CERCLA site that their use is well suited to the particular site. Only those state standards that are identified in a timely manner and are more stringent than federal requirements may be relevant and appropriate."

According to CERCLA Section 121(d)(2), in order to be considered an ARAR, a state requirement must be "promulgated". As defined in 40 CFR 300.400(g)(4) of the NCP, the term "promulgated" means that the requirement is of general applicability and is legally enforceable.

4.3.2 TBCs

In addition to ARARs, advisories, criteria, or guidance may be identified "to be considered" (TBC) for a particular release. As defined in 40 CFR 300.400(g)(3), the TBC category consists of advisories, criteria, or guidancedeveloped by EPA, other federal agencies, or states that may be useful in developing remedies. Use of TBCs is discretionary rather than mandatory as is the case with ARARs.

4.3.3 ARAR Categories

In general, there are three categories of ARARs. These categories are:

- Ambient or chemical-specific requirements

- Location-specific requirements

- Performance, design, or other action-specific requirements.

Each category is discussed in more detail below.

4.4 AMBIENT OR CHEMICAL-SPECIFIC REQUIREMENTS

Ambient or chemical-specific requirements set health- or risk-based concentration limits in various environmental media for specific hazardous substances or pollutants. These requirements set protective cleanup levels for the chemicals of concern in the designated media, or may act as action-related requirements in indicating a safe level of air emission or wastewater discharge. The chemical-specific ARARs identified herein are used in defining the remediation goals for clean up of contaminated surface water and discharge of treated water.

ARARs are derived primarily from federal and state health and environmental statutes and regulations. The following may be considered when establishing clean-up standards, but are not considered ARARs: health effects assessments, health advisories, chemical advisories, and guidance document criteria. These and any proposed standards are classified as items to be considered, or TBCs. Where background concentrations for constituents are above the ARAR for that constituent, a waiver from the ARAR may be appropriate. A summary of ARARs for the contaminants found in the surface and ground water of OU4 are presented in Tables 4.1 through 4.3. Table 4.3 presents ARARs for volatile organics, metals, conventional pollutants, and radionuclides and will be applied tooperations involving treated water.

As discussed in 55 FR 8741 (Preamble to the NCP), when more than one ARAR has been identified for a contaminant, the most stringent standard has been identified as the ARAR which the IM/IRA will attain to the greatest extent practicable. Where no ARAR standard exists, a TBC standard has been identified which the IM/IRA will treat as a goal to achieve. Federal and state ARAR spreadsheets used in the ARAR analysis for volatile organics, metals, conventional pollutants, and radionuclides are presented in Tables 4.1 and 4.2. The standards identified in Table 4.3 are based on the most stringent standards found in the Safe Drinking Water Act (SDWA) MCLs and Water Quality Control Commission (WQCC) statewide surface water standards. As described in Sections 4.3.1 through 4.3.5, the standards mentioned above were found to be applicable or relevant and appropriate to RFP Solar Ponds 207-A and 207-B and the ITS waters.

The standards and criteria identified as TBC in Table 4.3 are based on the most stringent standards found in WQCC Site-Specific Surface Water Standards and criteria in Tables I, II, and III of 3.1.16 in the Basic Standards for Surface Water. Additionally, CWA Ambient Water Quality Criteria (AWQC) were applied whenever more appropriate ARARs or TBCs were not identified. Overall, TBC standards were identified in Table 4.3 only when no ARAR standards were found.

As presented in Tables 4.1 and 4.2, the ARARs and TBCs summarized in Table 4.1 were developed using the ARARs rationale described above and were identified by examining the following standards and criteria:

- SDWA MCLs

- Colorado WQCC Standards for Surface Water

- CWA AWQC.

ARARs were not considered for the distillate from the evaporator. The

distillate is not a solid or hazardous waste because it is excluded from regulation pursuant to 6 CCR 1007-3, Part 261.2 (e)(ii).

This IM/IRA is limited in scope and only those ARARs associated with the activities and goals of the IM/IRA are evaluated. The ARARs associated with the effluent, sludge, air discharges, and construction and operation of the treatment units and tanks were considered. All other ARARs will be addressed in the forthcoming record of decision for OU4.

4.4.1 Safe Drinking Water Act MCLs

SDWA MCLs represent the maximum permissible level of a contaminant in water that is delivered to the free-flowing outlet of the ultimate user of a public water system [40 CFR 141.2(c)]. The OU 4 water to be treated according to this IM/IRA will be reused as an effective substitute for commercially available raw water. As directed by CDH, OU 4 treated water will be required to meet MCLs because CDH has determined that this water must meet the same water quality (drinking water quality, except for turbidity and microbiological contamination) as water provided from the Denver Water Board (DOE, 1989a).

Consequently, MCLs are regarded as ARARs. Furthermore, the NCP [40 CFR 300.430(e)] requires that, in development of remediation goals for evaluating alternatives for final remediation, the following be considered for current or potential sources of drinking water: attainment of MCLGs or MCLs, if MCLGs are zero, where relevant and appropriate; and attainment of CWA AWQC, where such criteria are relevant and appropriate. CWA AWQC are discussed in Section 4.3.5. It should be noted that on January 30, 1991, and June 7, 1991, (56 FR 3526 and 56 FR 26460, respectively) EPA published final rules amending MCLs and MCLGs for a number of the constituents identified in Table 4.3. These standards are effective July 30, 1992, and November 6, 1991, respectively, and will be regarded as applicable at that time. For purposes of this workplan, the new MCLs (MCLGs are zero or equal to the MCLs, except in the case of copper), are, therefore, relevant and appropriate and are identified as such in Table 4.3.

4.4.2 Colorado WQCC Standards for Surface Water

The Colorado WQCC has established both state-wide and stream segment-specific standards for the protection of state surface waters. State-wide standards exist for certain radioactive materials as well as organic standards adopted for all state sources of drinking water and areas requiring protection for aquatic life (see Section 3.1.11, 5 CCR 1002-8). These standards are consequently of general applicability. The state-wide standards are enforceable through the state's NPDES permitting process. Having apparently met the NCP state ARAR requirements of enforceability and general applicability [40 CFR 300.400(g)(4)], the state-wide surface water standards have been applied as ARAR in Table 4.3.

Site-specific surface water standards also exist for certain organics, metals, inorganics, and radioactive constituents in the form of goals for Segment 5. Accordingly, these standards do not appear to satisfy the NCP requirements for state ARARs since all segment 5 standards and classifications are goals. These standards have not been generally applied to the surface waters of Colorado. Furthermore, the site-specific standards for radioactive constituents are significantly more stringent than any standards applied to the surface waters of the State of Colorado. Consequently, the site-specific organic, metal, inorganic, and radionuclide surface-water standards cannot be ARAR. These standards have been applied as TBC in Table 4.3 because they reflect the degree of protectiveness determined to be necessary for Rocky Flats Plant surface waters by the Colorado WQCC.

4.4.3 CWA Ambient Water Quality Criteria (AWQC)

The CWA AWQC are non-enforceable guidance developed under CWA Section 304, and are used by states in conjunction with designated stream segmentusages to establish water quality standards for the protection of aquatic life and for the protection of human health. Standards include those established for drinking water and fish consumption, fish consumption only, as well as standards for the protection of aquatic life. CERCLA Section 121(d) requires that CWA AWQC be considered in the development of remediation goals in the FS process, where relevant and appropriate. Relative to this IM/IRA, AWQC are generally considered relevant and appropriate. Pursuant to the preamble of the NCP and EPA guidance (55 FR 8754; EPA, 1990), AWQC will generally not be considered relevant and appropriate whenever other standards exist that are specific to the constituents and the use of the affected water. Consequently, since the WQCC has designated RFP surface waters as drinking water usage and aquatic life protection stream reaches with associated standards, the AWQC were used as ARAR in Table 4.3 only when more appropriate Federal or Colorado standards were unavailable.

4.4.4 Protection of Human Health and the Environment

As illustrated by the hazard quotients and carcinogenic risks listed in Table 4.3, achieving the ARARs should result in a clean-up action that is protective of human health and the environment. For non-carcinogens, the protectiveness goal is a hazard index of 1. The hazard index is the sum of the hazard quotients [i.e., the estimated daily intake (dose) to reference dose ratios] for all of the contaminants combined, which have been computed and are presented in Table 4.3. In assessing non-carcinogenic risk, a hazard index of one or less is considered to be acceptable. If the hazard index exceeds one, it indicates that there might be the potential for adverse non-carcinogenic health effects occurring. Unlike the method used to evaluate the potential for carcinogenic toxicity, the hazard index does not indicate the probability of adverse health effects occurring, but it is used as a benchmark for determining where there is a potential concern. With respect to carcinogens, cumulative cancer risk should be less than 10[-6], but no greater than 10[-4] (individual cancer risks shown in Table 4.3 are considered additive). As noted in Table 4.3, the calculated incremental cancer risks exceed 10[-4] for some of the organic carcinogens as well as for beryllium. However, the cancer risks are computed on the basis of the detection limit and therefore can only be considered a possible maximum carcinogenic risk; the actual risk is unknown but likely to be considerably lower. Removing these contaminants to non-detectable levels and attaining, to the extent practicable, the other ARARs, the IM/IRA is considered protective of human health and the environment.

4.5 LOCATION SPECIFIC REQUIREMENTS

Location-specific ARARs are limits placed on the concentration of hazardous substances or the conduct of activities solely because they occur in certain locations. These may restrict or preclude certain remedial actions or may apply only to certain portions of a site. Examples of location-specific ARARs which pertain to the IM/IRA are federal and state siting laws for hazardous waste facilities (40 CFR 264.18, fault zone and floodplain restrictions), and federal regulations requiring that actions minimize or avoid adverse effects to wetlands (40 CFR Part 6 Appendix A and 40 CFR Parts 230-231).

More specifically, in addition to the requirements described above, pertinent location-specific ARARs include: Colorado requirements for siting of hazardous waste facilities and wastewater treatment facilities (Colorado Revised Statute 25-15-101, 203, 208, 302 and 25-8-292, 702, respectively), National Historic Preservation Act requirements for preservation of significant articles and historic properties (36 CFR Parts 65 and 800, respectively), federal critical habitat protection requirements (50 CFR

Parts 200, 402 and 33 CFR Parts 320-330), and federal requirements for the protection of fish and wildlife resources (40 CFR 6.302). A summary of location-specific ARARs which the IM/IRA will attain to the greatest extent practicable is presented in Table 4.4.

4.6 PERFORMANCE, DESIGN, OR OTHER ACTION SPECIFIC REQUIREMENTS

Performance, design, or other action-specific requirements set controls or restrictions on particular kinds of activities related to management of hazardous substances or pollutants. These requirements are not triggered by the specific chemicals present at a site, but rather by the particular IM/IRA evaluated as part of this plan. Action-specific ARARs are technology -based performance standards, such as the Best Available Technology (BAT) standard of the Federal Water Pollution Control Act. Other examples include RCRA treatment, storage, and disposal standards. Action-specific ARARs, which the IM/IRA will attain to the greatest extent practicable, are included in Table 4.5. Solar pond sludges and precipitate from the Building 910 flash evaporators will be treated under pondcrete operations. Therefore, RCRA LDR [40 CFR Part 268.40] requirements are not relevant and appropriate to the scope of this IM/IRA. RCRA LDR requirements will be considered in the final SEP remediation decision process.

As explained in the National Contingency Plan (see 55 FR 8666) OSHA requirements for worker protection in hazardous waste operations and emergency response (29 CFR 1910.120) are applicable to workers involved in hazardous substance-related activities, as well as other OSHA requirements related to specific circumstances or activities. These requirements must be satisfied, however, the requirements are not environmental in nature, and therefore are not considered ARARs.

5.0 EXPLANATION OF SIGNIFICANT CHANGES TO THE IM/IRA

Significant changes which change or alter this IM/IRA may result based on comments received by the public, EPA or the State. DOE will respond to comments which change or alter the selected remedy and will included those responses in the Final Decision Document for this IM/IRA. Comments have not been received that require a change in the selected remedy.

ROCKY FLATS PLANT (USDOE)

Site Information:

Site Name: ROCKY FLATS PLANT (USDOE)
Address: GOLDEN, CO

EPA ID: CO7890010526
EPA Region: 08

Record of Decision (ROD):

ROD Date: 09/01/1992
Operable Unit: 02
ROD ID: EPA/ROD/R08-92/065

Media: Soil, Ground Water

Contaminant: VOCs, Metals, Inorganics, Radioactive Materials

Abstract: SITE HISTORY/DESCRIPTION: The Rocky Flats Plant (USDOE) (Operable Unit 2) site is part of the 6,550-acre Department of Energy (DOE) nuclear weapons research, development, production, and plutonium processing complex in Jefferson County Colorado. The plant is composed of the 450-acre Rocky Flats Plant (RFP) security area and the remaining buffer area. Land use in the area is predominantly rural and agricultural with several new residential areas under development. In addition, a wetland area is located 1,000 feet from the site. The South Walnut Creek Basin and Woman Creek surface water serve as a source of drinking water. Since 1951, DOE has used the site for manufacturing components for nuclear weapons, processing plutonium, and fabricating, machining, and assembling components from metals. Anumber of past onsite production and waste storage activities resulted in extensive site contamination. During the 1950's and 1960's, solvents and reactive metals including lithium were destroyed onsite. From 1958 to 1967, drums containing radioactive contaminated oils and solvents were stored onsite, with some of the drums corroding and leaking approximately 5,000 gallons of liquid into the soil. Prior to 1968, sanitary sewage sludge and flattened drums contaminated with uranium and plutonium were disposed of in onsite trenches, and drums of uranium-contaminated oil were burned in onsite pits. In addition, various bottled gases were detoxified onsite between 1982 and 1983. Current waste handling practices involve onsite and offsite recycling of hazardous materials,

and offsite disposal of solid radioactive materials at another DOE facility. DOE has conducted a number of investigations that revealed VOCs, metals, and radionuclides above background levels in soil, sediment, ground water, and surface water. A 1969 clean-up action attempted to remove corroded and leaking drums of radioactive waste from an onsite area, remove contaminated soil, and cap the soil. During the clean-up and removal effort winds distributed plutonium to the south and east. In 1970, approximately 1,405 additional drums containing radioactive waste were removed and disposed of offsite. A 1990 ROD addressed contaminated ground water. This ROD addresses OU2, which includes the 903 Pad and Lip Area, Mound Area, and East Trenches Area, which are located southeast of the Rocky Flats Plant, and provides an interim remedy for contaminated soil and ground water. The primary contaminants of concern affecting the soil and ground water are VOCs, including PCE, TCE, toluene, and xylenes; other organics; metals, including arsenic, chromium, and lead; other inorganics; and radioactive materials. PERFORMANCE STANDARDS OR GOALS: Soil and ground water clean-up goals are based on health based criteria of 10[-4] to 10[-6] levels for cancer risk, background levels, andSDWA MCLs and MCLGs. They include chemical-specific goals for ground water for: acetone 10 ug/l; TCE 5 ug/l; xylene 10,000 ug/l; toluene 1,000 ug/l; methylene chloride 5 ug/l; aluminum 0.2 mg/l; antimony 0.6 mg/l; arsenic 0.05 mg/l; barium 1 mg/l; chromium 0.01 mg/l; iron 0.3 mg/l; lead 0.005 mg/l; mercury 0.0002 mg/l; selenium 0.01 mg/l; gross alpha 11 pCi/l; gross beta 19 pCi/l; Pu [239,240] 0.05 pCi/l. Chemical-specific clean-up goals for soil include arsenic 5 mg/l; barium 100 mg/l; cadmium 1 mg/l; chromium 5 mg/l; lead 5 mg/l; mercury 0.20 mg/l; selenium 5.7 mg/l; TCE 5.6 mg/kg; acetone 0.59-160 mg/kg; xylenes 28 mg/kg; and methylene chloride 33 mg/kg. INSTITUTIONAL CONTROLS: Not provided.

Remedy: SELECTED REMEDIAL ACTION: The selected interim remedial action for this site includes constructing an in-situ vacuum-enhanced soil vapor extraction system to perform pilot scale remedial tests; filtering extracted vapor using granular activated carbon, with offsite regeneration of spent carbon; installing ground water depression pumps at the East Trenches Area to expose residual DNAPLs not released through vapor extraction; collecting vapor extraction condensates and ground water in onsite ground water holding tanks; and transporting the condensates and ground water offsite for treatment at a POTW; monitoring radiation levels during equipment construction; mitigating any affected wetlands; and implementing a full scale remediation if pilot scale test results show a 1 ppm hydrocarbon recovery rate. No costs were provided for this remedial action.

Text: Full-text ROD document follows on next page.

Text:
DOE EA-0625

FINAL

SUBSURFACE INTERIM MEASURES/INTERIM REMEDIAL ACTION PLAN/ENVIRONMENTAL ASSESSMENT AND DECISION DOCUMENT

OPERABLE UNIT NO. 2

U.S. DEPARTMENT OF ENERGY

Rocky Flats Plant
Golden, Colorado

ENVIRONMENTAL RESTORATION PROGRAM

10 September 1992

Volume I - Text

DOE EA-0625

SUBSURFACE INTERIM MEASURES/INTERIM REMEDIAL ACTION

PLAN/ENVIRONMENTAL ASSESSMENT AND DECISION DOCUMENT

OPERABLE UNIT NO. 2

VOLUME I

U.S. Department of Energy
Rocky Flats Plant
Golden, Colorado

10 SEPTEMBER 1992

FINAL

Prepared by:

EG&G Rocky Flats, Inc.
Rocky Flats Plant
Golden, Colorado 80401

EXECUTIVE SUMMARY

The subject Interim Measures/Interim Remedial Action Plan/ Environmental Assessment (IM/IRAP/EA) addresses residual free-phase volatile organic compound (VOC) contamination suspected in the subsurface within an area identified as Operable Unit No. 2 (OU2). This IM/IRAP/EA also addresses radionuclide contamination beneath the 903 Pad at OU2. Although subsurface VOC and radionuclide contamination represent a source of OU2 ground-water contamination, they pose no immediate threat to public health or the environment. This is because the extent of the contaminated ground-water plume is contained well within the plant boundary, and its rate of migration is notexpected to result in off-site contamination before final remediation of OU2 is implemented (EG&G, 1990c).

IM/IRAs are typically used as a vehicle for contaminant migration abatement

and/or risk reduction. However, using the IM/IRA to gain sitespecific remedial information to support final action is also justifiable. For example, the U.S. Environmental Protection Agency (EPA) Office of Solid Waste and Emergency Response (OSWER) Directive guidance for ground-water remedial actions states (EPA, 1989a): "Response measures may be implemented to prevent further migration of contaminants if they will present the situation from getting worse, initiate risk reduction, and/or the operation of such a system would provide information useful to the design of the final remedy."

This IM/IRAP/EA identifies and evaluates interim remedial actions for removal of residual free-phase VOC contamination from three different subsurface environments at OU2. The term "residual" refers to the non-aqueous phase contamination remaining in the soil matrix (by capillary force) subsequent to the passage of non-aqueous or free-phase liquid through the subsurface. In addition to the proposed actions, this IM/IRAP/EA presents an assessment of the No Action Alternative. This document also considers an interim remedial action for the removal of radionuclides from beneath the 903 Pad. The decision to pursue such an action will be based on the results of treatability studies examining radionuclide removal technologies, currently being conducted by the U.S. Department of Energy (DOE). Each of the proposed VOC-removal actions involve in situ vacuum-enhanced vapor extraction technology. The remedial actions are proposed not for reasons of mitigating an immediate threat, but rather, for the collection of information that will aid in the selection and design of final remedial actions that address subsurface, residual free-phase VOC contamination at OU2. Also, the IM/IRA takes advantage of thebenefit afforded by a small-scale, early remedial action at a site where the uncertainties associated with subsurface remediation are great. The purpose is in agreement with a recent recommendation by the EPA OSWER with respect to subsurface remediation (EPA, 1989a): "The major recommendation is to orient our thinking so that we initiate early action on a small scale, while gathering more detailed data prior to committing to full-scale restoration." This guidance also advocates that a proposed action provide system flexibility so that it may be modified to better achieve clean-up goals based on information gained during its operation. To achieve this operational flexibility, the proposed vacuum-enhanced vapor extraction systems are initially subjected to in situ pilot testing. Based on information collected during the pilot study phase of the IM/IRA, a determination as to the benefit of continued operation of the vapor extraction and treatment systems (modified as necessary) at OU2 will be made. The Plan discusses general criteria that will be used to conclude pilot testing and to assess the benefit of post-pilot operation.

As noted above, the primary purpose of the proposed early, smallscale in situ vapor extraction actions is to collect information that will aid in the selection and design of final remedies for OU2. Project success will, therefore, be gauged by the usefulness of the data collected with respect to final remedial design, not by the degree of cleanup achieved. However, the anticipated removal of residual free-phase VOC contamination during pilot and post-pilot operation of the vapor extraction systems provides an additional benefit of the proposed Subsurface IM/IRA. No matter how small the scale, removal of residual free-phase VOCs from the OU2 subsurface represents a positive environmental impact.

The Subsurface IM/IRAP/EA has been prepared in accordance with EPA OSWER guidance advocating the use of Observational/Streamlined Approachmethodology for managing uncertainties associated with subsurface restoration. In developing the proposed actions, reasonably conceivable deviations in site conditions at OU2 have been identified, and contingency plans have been developed to manage any associated impacts.

The IM/IRAP/EA first provides project and Observational/Streamlined Approach background information. This information is followed by a description of the general extent of contamination within OU2 and the specific environmental issues associated with subsurface VOC contamination. A regulatory analysis identifying applicable or relevant and appropriate requirements (ARAR) for the proposed Subsurface IM/IRA is then presented. This regulatory analysis is based on DOE's current understanding of the ARAR philosophy as applied to this IM/IRA. CDH has expressed some concerns regarding this regulatory analysis; their comments are presented at the end of this Executive Summary (letter from Gary Baughman to Frazer Lockhart dated 12 March 1992). DOE expects to resolve all ARAR issues prior to finalizing the IM/IRA/EA. The IM/EIRAP/EA subsequently presents in situ vacuum-enhanced vapor extraction actions to be pilot tested in each of three primary OU2 Areas: 903 Pad, Mound, and East Trenches. Each of the proposed actions are critiqued with respect to their expected effectiveness, implementability, and environmental impact.

The subsurface actions proposed at the 903 Pad and East Trenches areas are expected to involve dewatering to allow induced vapor flows to contact any residual free-phase VOC contamination in soils currently beneath the water table. Dewatering may also be required at the Mound Area. The IM/IRAP/EA includes the use of the South Walnut Creek Basin Surface Water Treatment Facility to treat contaminated ground water recovered during the pilot testing phase. The IM/IRAP/EA also provides brief descriptions of other existing or planned Rocky Flats Plant (RFP) water treatment facilities that maypotentially be used during post-pilot IM/IRA operation in the event that the South Walnut Creek Basin facility becomes capacity limited.

After presentation and evaluation of the proposed actions, the IM/IRAP/EA provides a detailed assessment of the No Action Alternative followed by an analysis of the cumulative environmental impacts resulting from all previously approved RFP IM/IRAs and the proposed Subsurface IM/IRA at OU2.

The IM/IRAP/EA concludes with a discussion of the plan for implementing the proposed subsurface actions. Implementation includes the preparation of a Pilot Test Plan for each of the proposed actions. The Test Plans will include all of the detailed design, installation, operation, and test procedures necessary to execute the pilot tests. A Pilot Test Report will also be prepared at the conclusion of all three pilot tests. The report will present an evaluation of test data and offer recommendations concerning post-pilot operation of an in situ vacuum-enhanced vapor extraction system at each of three OU2 IM/IRA sites.

COLORADO DEPARTMENT OF HEALTH
COMMENTS ON
FINAL PROPOSED SUBSURFACE IM/IRAP/EA

COLORADO DEPARTMENT OF HEALTH

4210 East 11th Avenue
Denver, Colorado 80220-3716
Phone (303) 320-8333

Hazardous Materials and Waste Management Division
Telefax Number: (303) 331-4401

Telefax Numbers:
Main Building/Denver
(303) 322-9076

Ptarmigan Place/Denver
(303) 320-1529

First National Bank Building/Denver
(303) 355-6559

Grand Junction Office
(303) 248-7198

Pueblo Office
(719) 543-8441

ROY ROMER
Governor

JOEL KOHN
Interim Executive Director

March 12, 1992

Mr. Frazer Lockhart
U. S. Department of Energy
Rocky Flats Office
P.O. Box 928
Golden, Colorado 80402-0928

RE: Operable Unit 2 Draft Proposed Subsurface Interim Measure/Interim Remedial Action Plan/Environmental Assessment and Decision Document, March 2, 1992

Dear Mr. Lockhart,

The Colorado Department of Health (CDH), Hazardous Materials and Waste Management Division (the Division), has received the above referenced document submitted by DOE. This document includes both a discussion of Applicable or Relevant and Appropriate Requirements (ARARs) in Section 3.2.1 and a presentation of the proposed ARARs for groundwater contaminants in Appendix C. These sections represent the very serious differences in approach to determining ARARs that exist between DOE and CDH.

These differences, outlined below, are so serious that we will allow this document to be released to public comment only if this letter, in its entirety, is included in the document as a part of the Executive Summary. This allows us to make our concerns on the ARAR issue clear to the public, while allowing the already much delayed IM/IRA schedule to proceed. We would also like to point out that, if these issues are not resolved, the Division will be unable to approve a final version of the document on August 28, 1992, as is currently planned.

After a review by the Hazardous Materials and Waste Management and Water Quality Control Divisions of CDH, and the Office of the State Attorney General, it was determined that inadequate or incorrect treatment was given to the following:

- Because of the uncertain chemistry of the groundwater that may be recovered beneath the pilot study areas, a comprehensive list of chemicalspecific ARARs needs to be proposed. This list could include the Target Analyte List (TAL) Metals, and the Target Compound List (TCL) Volatiles and SemiVolatiles, but should include any constituents for which there are standards.

- The Colorado Water Quality Control Act is applied consistently throughout Colorado by the Water Quality Control Commission (WQCC). The resulting standards differ by stream segment for a variety of reasons including different classified uses needing protection and variations in natural background water quality. Therefore, even though Rocky Flats has segment-specific standards for Walnut Creek and Woman Creek the state statute and regulations and the methodology for arriving at these standards are generally applicable throughout the state. In addition, segment-specific standards are enforceable through State and Federal statutes and through NPDES permits. Therefore, all WQCC standards should be included in this document as ARAR.

- A goal qualifier indicates that "the waters are presently not fully suitable but are intended to become fully suitable for the classified use." It is important to note that the goal qualifier for classified uses results in only a temporary modification to numerical standards. The possible active lifetime of this IM/IRA will almost certainly outlast the current temporary modifications. Therefore the "goal" qualifier cannot be used to abrogate certain standards to TBC status.

We strongly urge DOE to revive and expedite the site-wide ARARdiscussions. The issues presented above will certainly be a part of these discussions and resolution depends on continuing communication.

If you have any questions regarding these matters, please call me at 331-4847 or Joe Schieffelin of my staff at 331-4421.

Sincerely,

Gary W. Baughman
Unit Leader, Hazardous Facilities Unit
Hazardous Materials and Waste Management Division

cc: Charlotte Robinson, AGO
Judy Bruch, RFPU
Paul Frohardt, WQCC
Martin Hestmark, EPA

TABLE OF CONTENTS

Section Title

EXECUTIVE SUMMARY

1 INTRODUCTION

1.1 Project Background
1.2 Observational/Streamlined Approach
1.3 IM/IRAP Organization

2 SITE CHARACTERIZATION

2.1 Site Description and Background
2.1.1 Location and Facility Type
2.1.2 Operable Unit No. 2 Description
2.1.2.1 903 Pad Area
2.1.2.2 Mound Area
2.1.2.3 East Trenches Area
2.1.3 Surrounding Land Use and Population Density
2.2 Affected Environment
2.2.1 Physical Environment

2.2.2 Regional and Local Hydrogeology
2.2.2.1 Alluvial Material
2.2.2.2 Bedrock Materials
2.2.3 Site Hydrology
2.2.3.1 Ground Water
2.2.3.2 Surface Water
2.2.4 Meteorology and Climatology
2.2.5 Ecology
2.2.6 Threatened and Endangered Species
2.2.7 Sensitive Environments - Wetlands and Floodplains
2.2.8 Cultural Resources
2.3 Contaminants - Description and Sources
2.3.1 Background Characterization

2.3.2 Soil Contamination
2.3.2.1 Volatile Organic Contamination
2.3.2.2 Inorganic Contamination
2.3.3 Ground-Water Contamination
2.3.3.1 Volatile Organic Contamination
2.3.3.2 Inorganic Contamination
2.3.4 Surface Water Contamination
2.3.5 Air Contamination
2.3.6 Summary of Contamination
2.4 Analytical Data
2.5 Site Conditions that Justify and IM/IRA

3 IDENTIFICATION OF SUBSURFACE IM/IRA OBJECTIVES

3.1 Objectives of Interim Measures/Interim Remedial Action
3.2 Compliance with ARARs and Protection of Human Health and the Environment 3.2.1 Applicable or Relevant and Appropriate Requirements 3.2.2 Items to be Considered 3.2.3 ARAR Categories 3.3 Ambient or Chemical-Specific Requirements 3.4 Location-Specific Requirements 3.5 Performance, Design, or Other Action-Specific Requirements

4 PROPOSED ACTIONS

4.1 Rationale for IM/IRA Technology Selection
4.2 Evaluation of Proposed Actions
4.2.1 Effectiveness
4.2.2 Implementability
4.2.3 Environmental Impacts
4.2.3.1 Air Quality
4.2.3.2 Water Quality
4.2.3.3 Terrestrial and Aquatic Impacts
4.2.3.4 Threatened and Endangered Species
4.2.3.5 Cultural Resource
4.2.3.6 Short-and Long-Term Land Productivity
4.2.3.7 Personnel Exposures
4.2.3.8 Commitment of Resources
4.2.3.9 Transportation Impacts
4.2.3.10 Wetlands and Floodplains Impact Assessment
4.2.3.11 Cumulative Impacts
4.3 Vacuum-Enhanced Vapor Extraction at 903 Pad (IHSS No. 112)
4.3.1 Test Site Description
4.3.1.1 Test Site Selection Rationale
4.3.1.2 Expected Conditions
4.3.2 Remedial Approach
4.3.2.1 Proposed Action Based on Expected Conditions
4.3.2.2 Observational/Streamlined Approach Considerations
4.3.3 Evaluation of Remedial Approach

4.3.3.1 Effectiveness
4.3.3.2 Implementability
4.3.3.3 Environmental Impact
4.4 Vacuum-Enhanced Vapor Recovery at Mound (IHSS No. 113)
4.4.1 Test Site Description
4.4.1.1 Test Site Selection Rationale
4.4.1.2 Expected Conditions
4.4.2 Remedial Approach
4.4.2.1 Proposed Action Based On Expected Conditions
4.4.2.2 Observational/Streamlined Approach Considerations
4.4.3 Evaluation of Remedial Approach
4.4.3.1 Effectiveness
4.4.3.2 Implementability
4.4.3.3 Environmental Impact
4.5 Vacuum-Enhanced Vapor Extraction at East Trenches Area (IHSS No. 111.1)
4.5.1 Test Site Description 4.5.1.1 Test Site Selection Rationale 4.5.1.2 Expected Conditions 4.5.2 Remedial Approach 4.5.2.1 Proposed Action Based On Expected Conditions 4.5.2.2 Observational/Streamlined Approach Considerations 4.5.3 Evaluation of Remedial Approach 4.5.3.1 Effectiveness 4.5.3.2 Implementability 4.5.3.3 Environmental Impact 4.6 Description of Alternative Water Treatment Facilities 4.6.1 South Walnut Creek Basin Surface Water Treatment System 4.6.2 881 Hillside Ground-Water Treatment System 4.6.3 Building 231B GAC Adsorption System/Building 374 Evaporation System 4.7 Environmental Evaluation of No Action 4.7.1 Air Quality Impacts 4.7.2 Water Quality Impacts 4.7.3 Terrestrial and Aquatic Impacts 4.7.4 Wetlands and Floodplains 4.7.5 Threatened and Endangered Species 4.7.6 Cultural Resources 4.7.7 Short-Term Uses and Long-Term Productivity 4.7.8 Personnel Exposures 4.7.9 Commitment of Resources 4.7.10 Transportation Impacts 4.7.11 Cumulative Impacts 4.8 Comparison of Environmental Effects of Proposed Remedial Actions

5 IMPLEMENTATION PLAN

5.1 Pilot Study Test Plans
5.2 Pilot Test Reports
5.3 IM/IRA Schedule

6 REFERENCES

LIST OF APPENDICES

APPENDIX A-SOIL SAMPLING RESULTS

APPENDIX B-GROUND-WATER SAMPLING RESULTS

APPENDIX C-APPLICABLE OR RELEVANT AND APPROPRIATE REQUIREMENTS FOR GROUND-WATER CONTAMINANTS

APPENDIX D-GEOLOGIC LOGS

APPENDIX E-TRANSPORTATION ANALYSIS

LIST OF FIGURES

Figure No. Title

2-1 Location of Rocky Flats Plant

2-2 Remedial Investigation Areas and Individual Hazardous Substance Sites

2-3 Land Zoning in the Vicinity of Rocky Flats Plant

2-4 Rocky Flats Plant Boundaries and Buffer Zone

2-5 Erosional Surface and Alluvial Deposits East of the Front Range, Colorado

2-6 Local Stratigraphic Section of the Rocky Flats Plant

2-7 Potentiometric Surface of the Unconfined Ground-Water Flow System

2-8 1990 Annual Wind Rose for the Rocky Flats Plant

2-9 Soil Sampling Location Map

2-10 Surface and Aerial Americium-241 Concentration Data for the RFP

2-11 Americium-241 (pCi/g) Isoconcentration Contours

2-12 Carbon Tetrachloride Isopleths for the Unconfined Alluvial Ground-Water Flow System

2-13 Tetrachloroethene Isopleths for the Unconfined Alluvial Ground-Water Flow System

2-14 Trichloroethene Isopleths for the Unconfined Alluvial GroundWater Flow System

2-15 Carbon Tetrachloride Isopleths for the Unconfined Bedrock Ground-Water Flow System

2-16 Tetrachloroethene Isopleths for the Unconfined Bedrock Ground-Water Flow System

2-17 Trichloroethene Isopleths for the Unconfined Bedrock GroundWater Flow System

2-18 Surface Water and Sediment Monitoring Stations

4-1 Approximate Locations of Drum Storage 903 Pad Drum Storage Site

4-2 Idealized Cross-Section 903 Pad Area

4-3 Schematic Ground-Water and Vapor Recovery System

4-4 Ground-Water and Vapor Extraction Well Schematic

4-5 Vapor Extraction Wells Schematic

4-6 Pilot Test Unit Vapor Extraction System

4-7 Pilot Test Unit Vapor Injection System

4-8 Idealized Cross-Section Mound Area

4-9 Schematic Proposed Vapor Extraction System Mound

4-10 Idealized Cross-Section East Trenches

4-11 Schematic Ground Water Vapor Recovery System East Trenches

4-12 South Walnut Creek Basin Chemical Precipitation Treatment System

4-13 881 Hillside Ground Water Treatment System (Planned)

4-14 Subsurface IM/IRA Building 231B GAC System (Planned)/Building 374 Low-Level Waste Treatment System

LIST OF TABLES

Table	Title
2-1	Rocky Flats Meteorological Monitoring Station 60 Meter Tower
4-1	Observational/Streamlined Approach at 903 Pad
4-2	Observational/Streamlined Approach at Mound
4-3	Observational/Streamlined Approach at East Trenches
4-4	Comparison of Environmental Effects of Proposed Remedial Actions
5-1	Subsurface IM/IRA Test Plan Outline
5-2	Proposed Schedule, Subsurface IM/IRA, Operable Unit No. 2

GLOSSARY OF ACRONYMS

Am	Americium
ARA	Applicable or Relevant and Appropriate Requirement
AS	Analytical Sampling Location
AT	Analytical Transmitter
BH	Borehole
CAA	Clean Air Act
CCl[4]	Carbon Tetrachloride
CDH	Colorado Department of Health
CEARP	Comprehensive Environmental Assessment and Response Program
CEDE	Committed Effective Dose Quality
CEQ	Council of Environmental Quality
CERCLA	Comprehensive Environmental Resource, Compensation and Liability Act of 1980
CFR	Code of Federal Regulations
CMS	Corrective Measures Study
COE	U.S. Army Corps of Engineers
CWA	Clean Water Act
d/m/g	disintegrations per minute per gram
DNAPL	Dense Non-Aqueous Phase Liquid
DOE	U.S. Department of Energy
DOT	U.S. Department of Transportation
DQO	Data Quality Objective
DRCOG	Denver Regional Council of Governments
EA	Environmental Assessment
EPA	U.S. Environmental Protection Agency
ER	Environmental Restoration (Program)
ERHSPP	Environmental Restoration Health and Safety Program Plan
ESA	Endangered Species Act
FFACO	Federal Facility Agreement and Consent Order
FI	Flow Indicator
FR	Federal Register
FS	Feasibility Study
ft/ft	feet per foot
GAC	Granular Activated Carbon
HA	High Alarm

HEPA	High Efficiency Air Particulate
HI	Hazard Index
HS	Health and Safety (Department)
IAG	Inter-Agency Agreement
IHSS	Individual Hazardous Substance Site
IM/IRAP	Interim Measures/Interim Remedial Action Plan
LI	Level Indicator
mg/l	milligrams per liter
mrem	milli radiation equivalent man
NCP	National Contingency Plan
NEPA	National Environmental Policy Act of 1969
NPDES	National Pollutant Discharge Elimination System
1,1,1-TCA	1,1,1-Trichloroethane
OSA	Operational Safety Analysis
OSWER	Office of Solid Waste and Emergency Response
OU2	Operable Unit No. 2
PA	Protected Area
PCE	Tetrachloroethene
pCi/g	picocurie per gram
pCi/	picocurie per liter
PI	Pressure Indicator
PPCD	Plan for Prevention of Contaminant Dispersion
PSHSP	Project Specific Health and Safety Plan
Pu	Plutonium
PVC	Polyvinyl Chloride
QA/QC	Quality Assurance/Quality Control
RCRA	Resource Conservation and Recovery Act of 1986
rem	radiation equivalent man
RFI	RCRA Facility Investigation
RFP	Rocky Flats Plant
RI	Remedial Investigation
SARA	Superfund Amendments and Reauthorization Act of 1986
SID	South Interceptor Ditch
SOP	Standard Operating Procedure
TCE	Tricholoroethene
TCLP	Toxicity Characteristic Leaching Procedure
TI	Temperature Indicator
U	Uranium
USC	United States Code
USFWS	U.S. Fish and Wildlife Coordination Act
UV	Ultra-violet
VOC	Volatile Organic Compound
ug/l	micrograms per liter

SECTION 1

INTRODUCTION

The subject Interim Measures/Interim Remedial Action Plan/ Environmental Assessment (IM/IRAP/EA) addresses residual free-phase volatile organic compound (VOC) contamination suspected in the subsurface within an area identified as Operable Unit No. 2 (OU2). This IM/IRAP/EA also addresses radionuclide contamination beneath the 903 Pad at OU2. Although subsurface VOCand radionuclide contamination represent a source of OU2 ground-water contamination, they pose no immediate threat to public health or the environment because the extent of the contaminated ground-water plume is contained well within the plant boundary, and its rate of migration is not expected to result in off-site contamination before final remediation of OU2 is implemented (EG&G, 1990c).

IM/IRAs are typically used as a vehicle for contaminant migration abatement

and/or risk reduction. However, use of the IM/IRA to gain sitespecific remedial information to support final action is also justifiable. For example, the U.S. Environmental Protection Agency (EPA) Office of Solid Waste and Emergency Response (OSWER) Directive guidance for ground-water remedial actions states (EPA, 1989a): "Response measures may be implemented to prevent further migration of contaminants if they will prevent the situation from getting worse, initiate risk reduction, and/or the operation of such a system would provide information useful to the design of the final remedy."

This IM/IRAP/EA identifies and evaluates interim remedial actions for removal of residual free-phase VOC contamination from three different subsurface environments at OU2. The term "residual" refers to the non-aqueous phase contamination remaining in the soil matrix (by capillary force) subsequent to the passage of non-aqueous or free-phase liquid through the subsurface. In addition to the proposed actions, this document presents an assessment of the No Action Alternative. This document also considers an interim remedial action for the removal of radionuclides from beneath the 903 Pad. The decision to pursue such an action will be based on the results of treatability studies examining radionuclide removal technologies, currently being conducted by the U.S. Department of Energy (DOE). Each of the proposed VOC-removal actions involve in situ vacuum-enhanced vapor extraction technology. The remedial actions are proposed not for reasons of mitigating an immediate threat, but rather, for the collection of information that will aid in the selection and design of final remedial actions that address subsurface, residual free-phase VOC contamination at OU2. Also, the IM/IRA takes advantage of the benefit afforded by a small-scale, early remedial action at a site where the uncertainties associated with subsurface remediation are great. The purpose is in agreement with a recent recommendation by the EPA OSWER with respect to subsurface remediation (EPA, 1989a): "The major recommendation is to orient our thinking so that we initiate early action on a small scale, while gathering more detailed data prior to committing to full-scale restoration." This guidance also advocates that a proposed action provide system flexibility so that it may be modified to better achieve clean-up goals based on information gained during its operation. To achieve this operational flexibility, the proposed vacuum-enhanced vapor extraction systems are initially subjected to in situ pilot testing. Based on information collected during the pilot study phase of the IM/IRA, a determination as to the benefit of continued operation of the vapor extraction and treatment systems (modified as necessary) at OU2 will be made. The Plan discusses general criteria that will be used to conclude pilot testing and to assess the benefit of post-pilot operation.

As noted above, the primary purpose of the proposed early, smallscale in situ vapor extraction actions is to collect information that will aid in the selection and design of final remedies for OU2. Project success will, therefore, be gauged by the usefulness of the data collected with respect to final remedial design, not by the degree of cleanup achieved. However, the anticipated removal of residual free-phase VOC contamination during pilot and post-pilot operation of the vapor extraction systems provides an additional benefit of the proposed Subsurface IM/IRA. No matter how small the scale, removal of residual free-phase VOCs from the OU2 subsurface represents a positive environmental impact.

OU2 is defined in the final Federal Facility Agreement and Consent Order (FFACO) (DOE, 1991a), commonly known as the Inter-Agency Agreement (IAG), and is comprised of 20 Individual Hazardous Substance Sites (IHSS) that are known in aggregate as the 903 Pad, Mound, and East Trenches Areas.

This IM/IRAP/EA is an integrated Comprehensive Environmental Response,

Compensation and Liability Act/Resource Conservation and Recovery Act/National Environmental Policy Act (CERCLA/RCRA/NEPA) document. Documentation prepared pursuant to CERCLA is integrated with NEPA values in accordance with DOE Order 5400.4. The document has been prepared to conform with the National Contingency Plan (NCP) (FR Vol. 55, No. 46, 8813; 40 CFR 300.415[b][4]) and to the NEPA of 1969, as implemented by regulations promulgated by the President's Council on Environmental Quality (CEQ) (40 CFR 1500-1508), and DOE Implementing Procedures [57 FR 15122 (24 April 1992) (to be codified in 10 CFR 1021)]. This IM/IRAP/EA is also based on EPA OSWER Directive No. 9355.3-03, which emphasizes the benefits of early, small-scale remedial actions to collect critical site information that would otherwise not be available to remedial action planners and designers. The Subsurface IM/IRAP/EA is also prepared in accordance with EPA OSWER Directive 9355.3-06, which advocates the use of Observational/Streamlined Approach methodology for managing uncertainties associated with subsurface restoration. (DOE's integration of NEPA and CERCLA documentation is not intended to represent a statement on the legal applicability of NEPA to environmental restoration activities conducted under CERCLA.)

1.1 PROJECT BACKGROUND

In March 1987, a Phase I Remedial Investigation (RI) under the Environmental Restoration (ER) Program (formerly known as the Comprehensive Environmental Assessment and Response Program [CEARP]) began at OU2. The investigation consisted of: the preparation of detailed topographic maps, radiometric and organic vapor screening surveys, surface geophysical surveys, a soil gas survey, a boring and well completion program, soil sampling, and surface and ground-water sampling. Phase I field activities were completed at OU2 during 1987, and a draft RI report was submitted to the EPA and the Colorado Department of Health (CDH) on December 31, 1987 (Rockwell International, 1987a). Phase I data did not allow adequate definition of the nature and extent of contamination for the purpose of conducting a baseline risk assessment and a feasibility study of remedial alternatives pertaining to contaminated media.

A draft Phase II RI Work Plan that presents the details and rationale for further field work to achieve these objectives was submitted to the regulatory agencies in June 1988 (Rockwell International, 1988c). This draft Work Plan was subsequently revised and submitted as a final Phase II RCRA Facility Investigation/Remedial Investigation Feasibility Study (RFI/RIFS) Work Plan in April 1990 (EG&G, 1990c). The plan was approved by EPA in May 1990. The Work Plan specifies for boreholes to be drilled into waste sources to characterize any waste materials remaining in place, and to assess the maximum contaminant concentrations in soils directly beneath the sites. In addition, ground-water monitor wells will be installed adjacent to some of the boreholes to characterize ground-water quality directly beneath the sites. Additional alluvial monitoring wells will be installed to further characterize and monitor ground-water flow and quality in alluvial materials at OU2. Field work for installation of the alluvial monitoring wells began in October 1991 and is expected to be completed in the Spring of 1992. Bedrock monitoring wells will be completed in subcropping Arapahoe sandstone where it is encountered.

A draft IM/IRAP for contaminated ground water at OU2 was submittedin December 1989 (Rockwell International, 1989b). The plan was prepared based on limited knowledge of the nature and extent of ground-water contamination. Regulatory agency review of the document determined that, although an IM/IRA for ground water is required by the 1989 Agreement in Principle between DOE and CDH, insufficient information existed on the nature and extent of ground -water contamination to pursue effective ground-water remediation at that time. In order to facilitate early evaluation of the need for an IM/IRA for

ground water at OU2, the final Phase II RFI/RIFS Work Plan incorporates a phased investigation approach. The phased approach is to investigate alluvial and hydraulically connected bedrock migration pathways first, and then to subsequently investigate ground-water contaminant sources. This will allow planning, design, and implementation of a ground-water IM/IRA, if necessary, before completion of the RFI/RI and Corrective Measures Study/Feasibility Study (CMS/FS) for OU2.

In February and March 1990, representatives from DOE, EPA, and CDH met to discuss surface water IM/IRAs at the Rocky Flats Plant (RFP) site. The result of these meetings was a series of agreements, with the concurrence of all parties, to implement an IM/IRA for the cleanup of contaminated surface water in OU2. On 26 September 1990, the DOE released for public comment a proposed Surface Water IM/IRA Plan and Decision Document for OU2. In this Plan, specific point source locations in the South Walnut Creek and Woman Creek drainage basins were proposed for collection of surface water. According to the Plan, surface water collected in each basin was to be transferred to a treatment facility discharging to the South Walnut Creek drainage. Effluent would ultimately flow to Pond B-5, where water is monitored, treated as necessary, and discharged in accordance with the RFP's National Pollutant Discharge Elimination System (NPDES). Comments on the IM/IRAP/EA received during the public comment period, however, revealed strong opposition to the transfer of contaminated seep water from the Woman Creek drainage to the South Walnut Creek drainage. Opposition was based on the absence of a proven performance record for the proposed IM/IRA treatment facility with respect to radionuclide removal and the potential for treatment process upsets. Opposition to the Plan was also based on the use of Indiana Street (located outside of the RFP boundary) to transport Woman Creek Basin seep water to the treatment facility by truck. In addition, the public voiced strong concern over potential worker and public health risks resulting from construction activities in the Woman Creek Basin (i.e., atmospheric resuspension of radionuclide-contaminated dust). In light of these concerns, the DOE and regulatory agencies agreed to address collection and treatment of South Walnut Creek and Woman Creek Basin contaminated surface water in two separate IM/IRAP/EAs.

A final South Walnut Creek Basin Surface Water IM/IRAP was submitted in March 1991 (EG&G, 1991f), and was approved by the regulatory agencies shortly thereafter. The Plan included removal of radionuclides and metals from surface water by chemical precipitation and microfiltration, followed by removal of VOCs by granular activated carbon (GAC) adsorption. Installation and startup of the GAC adsorption units occurred in May 1991. Installation of the chemical precipitation/microfiltration units was completed on 24 April 1992, and system startup occurred on 27 April 1992.

Prior to preparation of a Woman Creek Basin Surface Water IM/IRAP/EA, EPA mandated that bench-scale treatability studies of various treatment technologies be conducted in the Spring of 1991 to provide performance data for radionuclide removal. However, seep flows were insufficient for collection of an adequate volume with sufficient levels of radionuclides for conduct of these studies, and it was agreed that the Woman Creek Basin IM/IRAP/EA would be prepared in the absence of such studies to avoid project delays.

A draft Woman Creek Basin Surface Water IM/IRAP/EA was submitted on 02 October 1991 (EG&G, 1991g). This IM/IRAP/EA presents a detailed evaluation of the human health risks and environmental impacts associated with the contaminated Woman Creek Basin surface seeps. Results of the evaluation indicated that the contaminated seeps present no immediate threat to public health or the environment. The IM/IRAP/EA thus presented the No Action Alternative as the preferred alternative. Meetings between DOE, EPA, and

CDH were held subsequent to submission of the IM/IRAP/EA to discuss alternative IM/IRAs that could be conducted at OU2 in lieu of the originally conceived Woman Creek Basin surface water action. The result of these discussions was an agreement that a better use of resources was to pursue an IM/IRA that addresses suspected residual free-phase VOC contamination in the subsurface at one or more OU2 areas. It was further agreed that since subsurface VOC contamination at OU2 does not pose an immediate threat to public health and the environment, the IM/IRA should primarily be used to gain information that will aid in selection and design of final remedial actions at OU2.

1.2 OBSERVATIONAL/STREAMLINED APPROACH

OSWER Directive No. 9355.3-06 (EPA, 1989b) provides guidance for streamlining RI/FS activities to reduce the cost and time required for planning and implementing site cleanups. Streamlining is based on the Observational Method, which has been used for decades in the geotechnical engineering field when dealing with uncertainties associated with subsurface work. The "Observational/Streamlined Approach" has been used to plan the Subsurface IM/IRA at OU2. The fundamentals of the Observational/Streamlined Approach are discussed in this section along with the benefits of applying this approach to the restoration of hazardous waste sites.

The Observational/Streamlined Approach is based on the fundamentaltenet that it is not always possible to fully characterize the subsurface. In recent years, incomplete characterization of hazardous waste sites has delayed design and implementation of remedial actions, and has thus resulted in higher than expected costs. Observational methods aid in the streamlining of clean-up activities by emphasizing "data sufficiency" rather than "data completeness." Planners and designers should ask the question, "Is the site sufficiently characterized to develop a cost-effective and technically defensible remedial action?" By using the four-step process discussed below when developing a remedial action, this questions is answered.

The first step is to explicitly state the expected or probable conditions at the site based on all available data. Expected conditions pertain to subsurface geology, nature of contamination, water table behavior, etc. The expected site conditions, together with the remedial action objectives, are used to formulate the proposed remedial action.

Steps 2 and 3 require identification of reasonable deviations or uncertainties in the expected conditions and development of mechanisms for their resolution, respectively. Uncertainties in subsurface hydraulic communication, for example, may be resolved by conducting a tracer study prior to placement of ground-water recovery wells.

The final step in the Observational/Streamlined Approach planning involves development of contingency plans that address the potential deviations. Contingency planning may involve relocation of contaminant recovery systems, modification of treatment system configuration, use of alternative disposal methods for treatment system residuals, criteria to continue or cease system operation, etc. Modification of the proposed action based on Observational/Streamlined Approach contingency planning results in a technically superior and more cost effective remedial action than would otherwise be achieved.

Although the Subsurface IM/IRA is investigatory in nature, implementation of the pilot-scale systems discussed herein is based on limited site characterization data, and an Observational/Streamlined Approach to conduct this study is necessary. Utilizing this approach will maximize the quality and quantity of information that is gathered for subsequent remedial design

of full-scale systems for final remediation. This IM/IRA may also indicate that the technologies tested are either ineffective or not cost-effective for final remediation. This information is equally valuable by allowing these technologies to be dropped from further consideration in the FS process, and thus foregoing possible costly implementation of ineffective fullscale systems.

1.3 IM/IRAP ORGANIZATION

Section 2 of this IM/IRAP/EA provides RFP site characterization information, focusing on site characterization information for the 903 Pad, Mound, and East Trenches Areas at OU2. The discussion also describes the potentially affected environment associated with the IM/IRA and the results of previous investigations at OU2. The information included in Section 2 has been derived from the draft RI report and final Phase II RFI/RIFS Work Plan.

Section 3 identifies the objectives of the Subsurface IM/IRA at OU2. Applicable or Relevant and Appropriate Requirements (ARAR) and applicable environmental regulations pertinent to remediation of subsurface VOC contamination are also presented in this section.

Section 4 presents the proposed remedial actions to be implemented at each of the OU2 Areas: 903 Pad, Mound, and East Trenches. The proposed actions address removal of expected residual free-phase VOC contamination from the subsurface and are conceptually designed to provide information that will aid in the selection and design of final remedial actions at OU2. The proposed actions are critically evaluated based on CERCLA effectiveness and implementability and NEPA environmental impact criteria. Section 4 also presents an environmental assessment of the No Action Alternative.

Section 5 presents the plan for implementing the Subsurface IM/IRA at OU2. Implementation includes the preparation of a Pilot Test Plan for each of the proposed actions, and a Pilot Test Report at the conclusion of pilot testing. The purpose and content of the Test Plans and Test Report is discussed. A preliminary schedule for the proposed Subsurface IM/IRA is also presented in this section.

Section 6 provides a list of sources referenced in this IM/IRAP/EA.

Volume II of this IM/IRAP/EA contains ground-water, soils, and surface water quality data. Volume II also includes a tabulation of ARARs pertinent to the proposed Subsurface IM/IRA, and includes details of the transportation analysis performed for this Plan.

SECTION 2

SITE CHARACTERIZATION

This section describes the RFP and surrounding environs, and provides details on site hydrology, geohydrology, and contamination at OU2.

2.1 SITE DESCRIPTION AND BACKGROUND

2.1.1 Location and Facility Type

The RFP is located in northern Jefferson County, Colorado, approximately 16 miles northwest of downtown Denver (Figure 2-1). The plant site consists of approximately 6,550 acres of federally owned land in Sections 1 through 4, and 9 through 15, of Township 2 South, Range 70 West, 6th principal meridian. Plant buildings are located within an area of approximately 400 acres, known as the RFP security area. The security area is surrounded by a

buffer zone of approximately 6,150 acres.

The RFP is a government-owned, contractor-operated facility. It is part of a nationwide nuclear weapons research, development, production, and plutonium reprocessing complex, and is administered by the Rocky Flats Office of the DOE. The operating contractor for the RPF is EG&G Rocky Flats, Inc. The facility has been in operation since 1951 and manufactures components for nuclear weapons and conducts plutonium reprocessing. The RFP fabricates components from plutonium, uranium, beryllium, and stainless steel. Historically, production activities have included metal fabrication, machining, and assembly. Both radioactive and nonradioactive wastes are generated in the process. Current waste handling practices involve on-site and off-site recycling of hazardous materials and off-site disposal of solid radioactive and mixed wastes at another DOE facility.

The RFP is currently a RCRA hazardous waste treatment/storage facility. In the past, both storage and disposal of hazardous and radioactive wastes occurred at on-site locations. Preliminary assessments conducted under Phase I of the ER Program identified some of the past on-site storage and disposal locations as potential sources of environmental contamination.

2.1.2 Operable Unit No. 2 Description

OU2 is comprised of the 903 Pad, Mound, and East Trenches Areas, which are located east-southeast of the RFP as shown in Figure 2-2. (Also see Figure 2-4.) The Areas of OU2 lie within either the Woman Creek or South Walnut Creek drainage basins. Because this IM/IRAP/EA exclusively addresses subsurface contamination within the Woman Creek and South Walnut Creek drainage basins, it is useful to examine the historical uses of the OU2 Areas. Twenty sites, designated as IHSSs) lie within OU2: 5 in the 903 Pad Area, 4 in the Mound Area, and 11 in the East Trenches Areas. The historical activities at the OU2 IHSSs is discussed below. 2.1.2.1 903 Pad Area

Five sites are located within the 903 Pad Area (Figure 2-2). These sites are:

- 903 Drum Storage Site (IHSS No. 112).
- 903 Lip Site (IHSS No. 155).
- Trench T-2 Site (IHSS No. 109).
- Reactive Metal Destruction Site (IHSS No. 140).
- Gas Detoxification Site (IHSS No. 183).

Brief descriptions of each of these sites are presented below.

1. 903 Drum Storage Site (IHSS No. 112) - The site was used from 1958 to 1967 to store drums containing radioactively contaminated, used machine cutting oil. The drums, some of which corroded and leaked, contained oils and solvents contaminated with plutonium or uranium. Most of the drums contained lathe coolant consisting of mineral oil (i.e., petroleum distillate oil) and carbon tetrachloride (CCl_4) in varying proportions. However, an unknown number of drums contained hydraulic oils, vacuum pump oils, trichloroethene (TCE), tetrachloroethene (PCE), silicone oils, and acetone (Rockwell International, 1987a). Ethanolamine was also added to new drums after 1959 to reduce the drum corrosion rate. All drums were removed by 1968.

After the drums were removed, efforts were made to scrape and move the plutonium-contaminated soil into a relatively small area, cover it with fill material, and top it with an asphalt containment cover. This remedial action was completed in November 1969. An estimated 5,000 gallons of liquid leaked into the soil during use of the drum storage site. The liquid was estimated to contain 86 grams of plutonium (Rockwell International, 1987a).

2. 903 Lip Site (IHSS No. 155) - During drum removal and clean-up activities associated with the 903 Drum Storage Site, winds distributed plutonium to the south and east of what is now the 903 Pad. Although mostplutonium-contaminated soils were removed, radioactive contamination is still present at the 903 Lip Site in the surficial soils.

3. Trench T-2 Site (IHSS No. 109) - This trench was used prior to 1968 for the disposal of sanitary sewage sludge and flattened drums contaminated with uranium and plutonium.

4. Reactive Metal Destruction Site (IHSS No. 140) - This site was used during the 1950s and 1960s primarily for the destruction of lithium metal (DOE, 1986). Small quantities of other reactive metals (sodium, calcium, and magnesium) and some solvents were also destroyed at this location (Illsley, 1983).

5. Gas Detoxification Site (IHSS No. 183) - Building 952, located south of the 903 Drum Storage Site, was used to detoxify various bottled gases between June 1982 and August 1983. The gases consisted of: nitrogen oxides, chlorine, hydrogen sulfide, sulphur tetrafluoride, methane, hydrogen fluoride, and ammonia. Gas detoxification was accomplished by using various commercial neutralization processes available at the time. The neutralized gases released to the environment during detoxification would no longer be detectable (Rockwell International, 1987b).

A Phase I RI has been completed for these five sites. Phase II was initiated in the fall of 1991.

2.1.2.2 Mound Area

The Mound Area is composed of four sites (Figure 2-2). These are:

- Mound Site (IHSS No. 113).
- Trench T-1 Site (IHSS No. 108).
- Oil Burn Pit No. 2 Site (IHSS No. 153).
- Pallet Burn Site (IHSS No. 154).

These sites are individually described below.

1. Mound Site (IHSS No. 113) - The Mound Site containedapproximately 1,405 drums containing primarily depleted uranium- and plutoniumcontaminated lathe coolant (i.e., petroleum distillate oil). Some drums also contained "Perclene" (Smith, 1975); perclene was a brand name of tetrachloroethene (Sax and Lewis, 1987). Some of the drummed wastes placed in the Mound Site were in solid form (Rockwell International, 1987b). Initial remediation of the Mound Site was accomplished in 1970, and the materials that were removed were packaged and shipped to an off-site DOE facility as radioactive waste. Subsequent surficial soils sampling in the vicinity of the excavated Mound Site indicated 0.8 to 112.5 disintegrations per minute per gram (d/m/g) alpha activity. This radioactive contamination is thought to have come from the 903 Drum Storage Site via wind dispersion rather than from the Mound

Site (Rockwell International, 1987a).

2. Trench T-1 Site (IHSS No. 108) - The trench was used from 1954 until 1962 and contains approximately 125 drums filled with depleted uranium chips (Dow Chemical, 1971) and plutonium chips coated with lathe coolant. The drums are still present in this trench.

3. Oil Burn Pit No. 2 Site (IHSS No. 153) - Oil Burn Pit No. 2 is actually two parallel trenches that were used in 1957 and from 1961 to 1965 to burn 1,082 drums of oil containing uranium (Rockwell International, 1987a). The residues from the burning operations and some flattened drums were covered with backfill. Initial remedial activities were performed in the 1970s (Rockwell International, 1987a).

4. Pallet Burn Site (IHSS No. 154) - An area southwest of Oil Burn Pit No. 2 was reportedly used to destroy wooden pallets in 1965. The types of hazardous substances or radionuclides that may have been spilled on these pallets is unknown. Initial remedial activities were performed in the 1970s (DOE, 1986).

2.1.2.3 East Trenches Area

The East Trenches Area consists of nine burial trenches and two spray irrigation areas (Figure 2-2). The trench numbers and their respective IHSS designations are:

- Trench T-3 - IHSS No. 110.
- Trench T-4 - IHSS No. 111.1.
- Trench T-5 - IHSS No. 111.2.
- Trench T-6 - IHSS No. 111.3.
- Trench T-7 - IHSS No. 111.4.
- Trench T-8 - IHSS No. 111.5.
- Trench T-9 - IHSS No. 111.6.
- Trench T-10 - IHSS No. 111.7.
- Trench T-11 - IHSS No. 111.8.

Trenches T-3, T-4, T-10, and T-11 are located north of the east access road, and trenches T-5 through T-9 are located south of the east access road. The trenches were used from 1954 to 1968 for disposal of depleted uranium; flattened, depleted uranium- and plutonium-contaminated drums; and sanitary sewage sludge. The wastes have not been disturbed since their burial.

IHSS numbers 216.2 and 216.3 are part of the East Trenches Area and are designated as IHSSs because they were used for spray irrigation of sewage treatment plant effluent. The historical discharge of Pond B-3 was to this spray irrigation area. However, this practice has been terminated, and the current Pond B-3 discharge is sent to Pond B-4.

2.1.3 Surrounding Land Use and Population Density

The RFP property is located in a rural area. Approximately 50 percent of the area within 10 miles of the RFP is in Jefferson County. The remainder is located in Boulder County (40 percent) and Adams County (10percent).

According to the 1973 Colorado Land Use Map, 75 percent of this land was unused or was used for agriculture. Since that time, portions of this land have been converted to housing, with several new housing subdivisions being started within a few miles of the Buffer Zone, southeast of the plant site. Land zoning is depicted in Figure 2-3.

A demographic study, using 1990 census data, shows that approximately 1.9 million people lived within the eight-county Denver metropolitan region. This region covers approximately 5,076 square miles and includes the following counties: Adams, Arapahoe, Boulder, Clear Creek, Denver, Douglas, Gilpin, and Jefferson. The most populated sector is to the southeast, toward the center of Denver. This sector had a 1989 population of approximately 600,000 people living between 10 and 50 miles from Rocky Flats. Recent population estimates registered by the Denver Regional Council of Governments (DRCOG) for the eight-county Denver metro region have shown distinct patterns of growth between the first and second halves of the decade.

Between 1980 and 1985, the population of the 8-county region increased by 197,890, a 2.4 percent annual growth rate (DRCOG, 1989). Between 1985 and 1990 a population gain of 80,875 was recorded, representing a 0.9 percent annual increase. The 1990 population showed an increase of 9,300 (or 0.5 percent) from the same date in 1989 (DRCOG, 1990).

The RFP property is approximately 3 miles (north-south) by 4 miles (east-west). Figure 2-3 illustrates that this property consists of plant facilities surrounded by an area of undeveloped land known as the Buffer Zone (approximately 4,600 acres). The current and intended future use of the Buffer Zone is as an undeveloped open area (i.e., "greenbelt") (AEC, 1972). Use of the Buffer Zone as a greenbelt serves to preserve the natural ecological state of the land and prevents development immediately adjacent to the plant area. There are eight public schools within 6 miles of the RFP. The nearest educational facility is Witt Elementary School, which is approximately 2.7 miles east of the Plant Buffer Zone. The closest hospital is Centennial Peaks Hospital, located approximately 7 miles northeast. The closest park and recreational area is the Standley Lake area, approximately 5 miles southeast of the Plant. Boating, picnicking, and limited overnight camping are permitted in the Standley Lake Recreational Area. Several other small parks are located in communities within 10 miles of the RFP. The closest major park is Golden Gate Canyon State Park, located approximately 15 miles to the southwest, providing 8,400 acres of general camping and outdoor recreation.

Other national and state parks are located in the mountains west of the RFP, but all are more than 15 miles away.

Some of the land adjacent to the RFP is zoned for industrial development. Industrial facilities within 5 miles include the former TOSCO (The Oil Shale Company) laboratory (40-acre site located 2 miles south and now occupied by Analytica, Inc.), the Great Western Inorganics Plant (2 miles south), the Frontier Forest Products yard (2 miles south), the Idealite Lightweight Aggregate Plant (2.4 miles northwest), and the Jefferson County Airport and Industrial Park (990-acre site located 4.8 miles northeast).

Several ranches are located within 10 miles of the RFP, primarily in Jefferson and Boulder Counties. They are operated to produce crops, raise beef cattle, supply milk, and breed and train horses. According to the 1987 Colorado Agricultural Statistics, 20,758 acres of crops were planted in Jefferson County (total land area of approximately 475,000 acres), and 68,760 acres of crops were planted in Boulder County (total land area of 405,760 acres). Crops consisted of: winter wheat, corn, barley, dry beans,

sugar beets, hay, and oats. Livestock consisted of: 5,314 head of cattle, 113 hogs, and 346 sheep in Jefferson County; and 19,578 head of cattle, 2,216 hogs, and 12,133 sheep in Boulder County (Post, 1989).

2.2 AFFECTED ENVIRONMENT

2.2.1 Physical Environment

The natural environment of the RFP and vicinity is primarily influenced by its proximity to the Front Range of the Rocky Mountains. The RFP is located directly east of the north-south trending Rocky Mountains at an elevation of approximately 6,000 feet above mean sea level. The RFP is located on a broad, eastward-sloping plain of overlapping alluvial fans. These fans extend approximately 5 miles east of the Front Range and terminate where gentle slopes break to low rolling hills. The Continental Divide is approximately 16 miles west of the RFP. The operational area at the RFP is located near the eastern edge of the fans on a terrace between the stream-cut valleys of North Walnut Creek and Woman Creek. The Rocky Flats Alluvium (the deposit of coalescing alluvial fans) is exposed at the surface and consists of a topsoil layer underlain by as much as 100 feet of silt, clay, sand, and gravel.

Mineral resources found in the vicinity of the RFP include: sand, gravel, crushed rock, clay, coal, and uranium. There are no known clay, coal or uranium deposits within the RFP Buffer Zone; however, these commodities are mined within 20 miles of the plant. The Schwartzwalder Uranium Mine is located approximately 4 miles southwest of the RFP. This mine has been the largest producer of vein type uranium ore in Colorado and ranks among the six largest of this type in the United States (DOE, 1980). Active sand and gravel mines lie within the Buffer Zone boundaries. In addition, there is an aggregate processing facility adjacent to the northwest corner of the Buffer Zone that reopened in 1989. Oil and natural gas production is also active in nearby northwest Adams County and east central Boulder County.

Oil and natural gas activities near the RFP site includes oil field developments, pipeline, and production operations. The closest major oil and gas fields are in northwest Adams County (Jackpot and Spindle Fields), and in east central Boulder County (Boulder Field). A natural gas pipeline, which originates in Wyoming and proceeds across eastern Colorado into Oklahoma, is located approximately 10 miles north of the RFP in southern Boulder County. Local natural gas pipelines cross the south side of the RFP. The nearest refinery operation is the Conoco Refinery located in Commerce City about 20 miles east of the RFP. A north-south oriented oil pipeline feeds into the refinery from fields in northeastern Colorado and southeastern Wyoming (Donaldson and MacMillan, 1980).

There are four main drainages within the RFP property as shown in Figure 2-4. North Walnut, South Walnut, Rock, and Woman Creeks all have intermittent streams. These drainages enter downstream reservoirs that provide drinking and irrigation water. There are a number of ditches crossing the area that convey water collected off site to other areas of the RFP, Walnut Creek, or Woman Creek. Until late 1974, Plant wastewater had been discharged into Walnut Creek, and until 1975, filter backwash from the raw water treatment plant went into Woman Creek. All process wastewater is now either recycled or disposed through evaporation. Evaporation residues are solidified by the addition of Portland cement, characterized, and subsequently

managed according to RFP waste management operating procedures. Sanitary wastewater is discharged in accordance with the RFP's NPDES permit effluent requirements.

2.2.2 Regional and Local Hydrogeology

The stratigraphic section that pertains to the RFP includes, indescending order, unconsolidated surficial units (Rocky Flats Alluvium, various terrace alluviums, valley fill alluvium, and colluvium) (Figure 2-5), Arapahoe Formation, Laramie Formation, and Fox Hills Sandstone (Figure 2-6). Ground water occurs under unconfined conditions in both the surficial and shallow bedrock units. In addition, confined ground-water flow occurs in deeper bedrock sandstones.

2.2.2.1 Alluvial Materials

The Rocky Flats Alluvium underlies a large portion of the RFP. The alluvium is a broad planar deposit consisting of a topsoil layer underlain by up to 100 feet of poorly stratified silt, clay, sand, gravel, and cobbles.

Unconfined ground-water flow occurs in the Rocky Flats Alluvium, which is relatively permeable. Recharge to the alluvium occurs from precipitation, snowmelt, and water losses from ditches, streams, and ponds that are cut into the alluvium. General water movement in the Rocky Flats Alluvium is from west to east and toward the drainages. (Ground-water flow is also controlled by paleochannels in the top of the bedrock.) The water table in the Rocky Flats Alluvium rises in response to recharge during the spring a declines during the remainder of the year. Discharge from the alluvium occurs at minor seeps in the colluvium that covers the contact between the alluvium and bedrock along the edges of the valleys. OU2 is situated on a terrace of Rocky Flats Alluvium that thins to the east or the RFP, and does not directly supply water to wells located downgradient of the RFP.

Various other alluvial deposits occur topographically below the Rocky Flats Alluvium in the Plant drainages. Colluvium (slope wash) mantles the valley side slopes between the Rocky Flats Alluvium and the valley bottoms. In addition, remnants of younger deposits, including

the Verdos, Slocum, and Louviers Alluvia, occasionally occur along the valley side slopes. Recent valley fill alluvium occurs in the active stream channels.

Unconfined ground-water flow occurs in these surficial units. Recharge is from precipitation, percolation from streams and ditches during periods of surface water runoff, and by seeps discharging from the Rocky Flats Alluvium. Discharge is by seepage into other geologic formations and streams, and by evaporation where the water table approaches the ground surface. The direction of ground-water flow is generally downslope through culluvial materials and then along the course of the stream in valley fill materials. During periods of high surface water flow, water is lost to bank storage in the valley fill alluvium and returns to the stream after the runoff subsides.

2.2.2.2 Bedrock Materials

The Cretaceous Arapahoe Formation underlies surficial materials beneath the Plant. This formation is a fluvial deposit composed of overbank and channel deposits. It primarily consists of claystone with some sandstone and is nearly flat lying beneath the Plant (less than a 2-degree dip) based on the draft seismic profiling report (Rockwell International, 1989a). The sand bodies within the claystone are composed of fine-grained sands and silts, and their hydraulic conductivity is relatively low compared to the overlying Rocky Flats Alluvium. Total formation thickness varies up to 270 feet (Robson, Romero, and Zawistowski, 1981).

The Arapahoe Formation is recharged by ground-water movements from overlying surficial deposits and by leakage from streams. The main recharge areas are under the Rocky Flats Alluvium, although some recharge from the colluvium and valley fill alluvium is likely to occur along the stream valleys. Recharge is greatest during the spring and early summer when rainfall andstream flow are at a maximum and water levels in the Rocky Flats Alluvium are high. Ground-water movement in the Arapahoe Formation is generally toward the east, although flow within individual sandstones is not fully characterized at this time. Regionally, ground-water flow in the Arapahoe Formation is toward the South Platte River in the center of the Denver Basin (Robson, Romero, and Zawistowski, 1981).

The Laramie Formation underlies the Arapahoe Formation and is composed of two units, a thick upper claystone and a lower sandstone. The claystone is greater than 700 feet thick and is of very low hydraulic conductivity; therefore, the U.S. Geologic Survey (Hurr, 1976) concludes that RFP operations will not impact any units below the upper claystone unit of the Laramie Formation.

The lower sandstone unit of the Laramie Formation and the underlying Fox Hills Sandstone comprise a regionally important aquifer in the Denver Basin known as the Laramie-Fox Hills Aquifer. Aquifer thickness ranges from 200 to 300 feet near the center of the basin. These units subcrop west of the Plant and can be seen in clay pits excavated through the Rocky Flats Alluvium. The steeply dipping beds of these units west of the Plant (approximately a 50degree dip) quickly flatten to the east (less than 2-degree dip) based on preliminary results of the high resolution seismic reflection study (Rockwell International, 1989a). Recharge to the aquifer occurs along the rather limited outcrop area exposed to surface water flow and leakage along the Front Range (Robson, Wacinski, Zawistowski, and Romero, 1981). In the vicinity of the RFP, this would occur west of the Plant where the units subcrop.

Sixteen wells were completed in various zones within bedrock during the 1987 drilling program at OU2. Although claystone was the most frequently encountered lithology immediately below the alluvium/bedrock contact, interbedded sandy, silty, and lignitic units with both gradational and sharp contactswere present as well. All of the bedrock encountered directly beneath surficial materials was weathered, and some saturated sandstones were encountered.

2.2.3 Site Hydrology

The following discussion of the site hydrology of OU2 includes ground water that occurs in surficial and bedrock materials, and surface water drainage patterns of the Woman Creek and South Walnut Creek drainages.

2.2.3.1 Ground Water

Ground water occurs in surficial materials (Rocky Flats Alluvium, colluvium, and valley fill alluvium) and in Arapahoe sandstones and claystones at OU2. These two flow systems, which are hydraulically connected at shallower portions of the Arapahoe Formation, are discussed separately below.

Ground Water in Surficial Materials

Ground water is present in the Rocky Flats Alluvium, colluvium, and valley fill alluvium under unconfined conditions. Recharge to the water table occurs as infiltration of incident precipitation and seepage from ditches and creeks. In addition, detention ponds along Woman Creek and South Walnut Creek recharge the valley fill alluvium. Figure 2-7 shows the

potentiometric surface of the uppermost ground water measured between April 4 and April 8, 1988, and the locations of alluvial and bedrock wells in the vicinity of OU2. The potentiometric surface during April 1988 is typical of the spring time water table at OU2. The shallow ground-water flow system is quite dynamic with large water level changes occurring in response to precipitation events that influence stream and ditch flow. For example, between mid-April and September 1986 water levels in wells 1-86 and 4-86 (completed in valley fill alluvium) dropped more than 4 and 8 feet, respectively. Alluvial water levels are highest during the months of May and June then decline during late summer and fall with some wells going completely dry. Ground-water flow in the Rocky Flats Alluvium is generally from west to east, following the surface of the claystone bedrock. Alluvial ground water discharges to seeps, springs, surface water drainages, and subcropping Arapahoe Sandstone at OU2. Seeps and springs occur along the edge of the Rocky Flats Alluvium terrace (at the alluvium/bedrock contact) and on the side slopes of the terrace. Seeps and springs on the terrace side slopes may be due to thinning of colluvial materials. Ground water in colluvial materials south of the 903 Pad and East Trenches Areas discharges to the South Interceptor Ditch (SID), and ground water in valley fill materials discharges to Woman or South Walnut Creeks.

Hydraulic conductivity values for surficial materials were estimated from drawdown-recovery tests performed on 1986 wells during the initial site characterization, and from slug tests performed on selected 1986 and 1987 wells during the Phase I RI (Rockwell International, 1987a). Mean hydraulic conductivities are 4 x 10[-4], 7 x 10[-4], and 9.5 x 10[-5] centimeters per second (cm/s) for Rocky Flats, Woman Creek Valley Fill, and South Walnut Creek Valley Fill Alluvium, respectively.

Bedrock Ground Water

Due to their relatively high permeability, the meandering lenticular sandstones contained within the claystones (i.e., the basal formation) provide the greatest potential for ground-water flow in the Arapahoe Formation. Flow within individual sandstones is assumed to be from west to east, but the geometry of the bedrock ground-water flow path is not fully understood at this time due to its dependence upon the continuity of the sandstones and their hydraulic interconnection (Robson, Romero, and Zawistowski, 1981). Evaluation of the lateral extent and degree of interconnection of the sandstone units is a primary goal of the Phase II Bedrock RI for OU2. Ground water recharged to sandstones occurs as infiltration from alluvial ground water where sandstonessubcrop beneath the alluvium and by leakage from claystones overlying the sandstones. Ground water from the basal formation of the Arapahoe aquifer is used for irrigation, livestock, watering, and domestic purposes. Wells are located east of the RFP within the Denver Basin.

There is a strong downward gradient between ground water in surficial materials and bedrock. Vertical gradients range from 0.31 feet per foot (ft/ft) between wells 35-86 and 34-86 to 1.05 ft/ft between wells 41-86 and 40-86. These gradients imply a relatively high hydraulic conductivity contrast between the surficial materials and bedrock, which is supported by hydraulic conductivity test results

2.2.3.2 Surface Water

Surface water drainage patterns at the RFP are shown on Figures 2-2 and 2-4. A discussion of the major OU2 surface water features, including the Woman Creek and South Walnut Creek drainages, is presented below. Collection and treatment of the South Walnut Creek Basin surface water and seepage is being addressed in the IM/IRA (EG&G, 1991f) discussed in Section 1.

Woman Creek

Woman Creek is located south of the Plant, with headwaters in largely undisturbed Rocky Flats Alluvium. Runoff from the southern part of the Plant is collected in the SID located north of the creek and delivered downstream to Pond C-2 (see Figure 2-2). Pond C-1 (upstream of C-2) receives stream flow from Woman Creek. Flow in Woman Creek is also influenced by diversion of water from Rocky Flats Lake into the creek by local landowners. The discharge from Pond C-1 is diverted around Pond C-2 into the Woman Creek channel downstream. Water in Pond C-2 is treated and monitored prior to discharge. Discharge from Pond C-2 is in accordance with the Plant's NPDES permit (discharge point 007). Historically, discharge from Pond C-2 has been to Woman Creek;however, since October of 1989, treated water is being pumped to the South Walnut Creek drainage and flows off site via the Broomfield Diversion Canal.

Flow in Woman Creek and the SID is intermittent. This has been observed by field investigation crews since 1986.

South Walnut Creek

The headwaters areas of South Walnut Creek has been filled during construction of RPF facilities. As a result, flow originates from a buried culvert located in the east-central portion of OU2, west of Building 991. Flow in the upper reach of South Walnut Creek is directed to the south of Building 991 and under the Protected Area (PA) fence by a buried, corrugated metal culvert. The culvert outlet is located in the South Walnut Creek drainage approximately 500 feet downgradient of the PA fence near the discharge of the sewage treatment plant. A concrete culvert and a second corrugated metal culvert also discharge into the South Walnut Creek drainage just downgradient of the PA fence and north of the Mound Area. The flow from the concrete culvert originates as seepage from the hillside south of Building 991 and flows into a ditch along the slope. The corrugated metal culvert drains Plant runoff that collects in a drainage south of the PA. The combined flow then enters the South Walnut Creek detention pond system. Below the detention ponds, South Walnut Creek, North Walnut Creek, and an unnamed tributary join within the Buffer Zone to form Walnut Creek. Flow is routed around Great Western Reservoir by the Broomfield Diversion Canal. Great Western Reservoir is located approximately 1 mile east of this confluence and is a primary drinking water source for the residents of Broomfield.

The South Walnut Creek detention pond system consists of five ponds (B-1, B-2, B-3, B-4, and B-5) that retain surface water runoff and RFP discharges for flood control, monitoring, and treatment prior to downstream release. All flow in the pond system is eventually detained in Pond B-5, where it is treated and monitored prior to discharge. Water is discharged from Pond B-5 in accordance with the Plant NPDES permit (discharge point 006). Ponds B-1 and B-2 are reserved for spill control, surface water runoff, or treated sanitary waste of questionable quality. Pond B-3 is used as a holding pond for sanitary sewage treatment plant effluent. The historical discharge of Pond B-3 was a spray irrigation system located in the vicinity of the East Trenches; however, this practice has been terminated and current Pond B-3 discharge is routed to Pond B-4. In addition to Pond B-3 discharge, Ponds B-4 and B-5 receive surface water runoff from the central portion of the RFP. The surface water runoff received by Pond B-4 is collected by the Central Avenue Ditch and the South Walnut Creek Drainage.

2.2.4 Meteorology and Climatology

The area surrounding the RFP has a semiarid climate characteristic of much of the central Rocky Mountain region. Approximately 40 percent of the 15-inch annual precipitation falls during the spring season, much of it as snow. Thunderstorms (June to August) account for an additional 30 percent of the annual precipitation. Autumn and winter are drier seasons, accounting for 19 and 11 percent of the annual precipitation, respectively. Snowfall averages 85 inches per year, falling from October through May (DOE, 1980). Temperatures are moderate; extremely warm and cold weather is usually of short duration. On the average, daily summer temperatures range from 55 F to 85 F, and winter temperatures range from 20 F to 45 F. The low average relative humidity (46 percent) is due to the blocking effect of the Rocky Mountains.

Wind, temperature, and precipitation data are collected on Plant site and summarized annually. Table 2-1 presents the 1990 annual summary of the percent frequency of wind directions (16 compass points) divided into 6 speed categories. These frequency values are represented graphically in Figure 2-8. Winds at the RFP are predominantly northwesterly. Winds greater than 4.18 meters per second (m/s) (9.2 miles per hour mph) with easterly components occur with a low frequency. The Pasquill Stability Class D represents the prevailing meteorological conditions for the RFP (EG&G, 1991a), and average downwind directional frequencies.

Special attention has been focused on dispersion meteorology surrounding the Plant due to the remote possibility that significant atmospheric releases might affect the Denver metropolitan area, which is located in the predominant downwind (southeast) direction. Studies of air flow and dispersion characteristics (e.g., Hodgin, 1983 and 1984) indicate that drainage flows (winds coming down from the mountains to the west) turn and move toward the north and northeast along the South Platte River valley and pass to the west and north of Brighton, Colorado (DOE, 1980), which is just north of Denver.

2.2.5 Ecology

The RFP site includes species of flora representative of tall grass prairie, short grass plains, lower montane, and foothills ravine regions. It is evident that the vegetative cover along the Front Range of the Rocky Mountains has been altered by human activities such as burning, timber cutting, road building, and overgrazing for many years. Since the acquisition of the RFP property, vegetative recovery has occurred as evidenced by the presence of grasses such as big bluestem and sideoats grama (two disturbance-sensitive species). No vegetative stresses attributable to hazardous waste contamination have been identified (DOE, 1980).

The animal life inhabiting the RFP and its buffer zone consists of species associated with western prairie regions. The most common large mammal is the mule deer with an estimated population between 100 to 125 permanent residents. There are a number of small carnivores, such as the coyote, red fox, striped skunk, and long-tailed weasel. A profusion of small herbivore species can be found throughout the RFP and Buffer Zone such as the pocket gopher, white-tailed jackrabbit, and the meadow vole (DOE, 1980).

Woman Creek supports an aquatic biota typical of high-prairie streams. Due to the low nutrient content in Woman Creek, the stream supports only small algal populations. Cattails and bullrush are also present. The rocky bottom of Woman Creek supports a relatively diverse biota composed of may flies, caddis flies, and other forms typical of clean water streams. Redside dace minnows are abundant in the streams and ponds; a few bluegill are also present (DOE, 1990a).

Bull snakes and rattlesnakes are the most frequently observed reptiles. Eastern yellow-bellied racers have also been seen. The eastern shorthorned lizard has been reported on Plant site, but these and other lizards are not commonly observed. The western painted turtle and the western plains garter snake are found in and around many of the ponds (DOE, 1980).

Commonly observed birds include western meadowlarks, horned larks, morning doves, and vesper sparrow. A variety of ducks, killdeer, and redwinged blackbirds are seen in areas adjacent to ponds. Mallards and other ducks frequently nest and raise young on several of the ponds. Common birds of prey in the area include marsh hawks, red-tailed hawks, common birds of prey, rough-legged hawks, Swainson's Hawks, Great Horned Owls, and Burrowing Owls (DOE, 1980).

2.2.6 Threatened and Endangered Species

Relevant laws and regulations that protect threatened and endangered species include: NEPA of 1969, the Endangered Species Act (ESA) of 1973(Public Law 93-0205), the Clean Water Act (CWA) as amended (33 U.S.C. 1251), and the Migratory Bird Treaty Act (16 U.S.C. 1701-711). Federal agencies must ensure that actions authorized, funded, or carried out by them will not jeopardize the continued existence of any endangered or threatened species (EG&G, 1991g).

Studies were conducted at the RFP to identify potential habitat for threatened and endangered species and other species of special concern (EG&G, 1991e). A literature search was conducted to obtain information on sensitive species that may be present at the RFP and data on habitats present on the site. Information on endangered species was obtained from the U.S. Fish and Wildlife Service (USFWS). The U.S. Army Corps of Engineers (COE) was contacted for information on wetland plant species. The Colorado Natural Areas Program and Colorado Division of Wildlife were contacted for information on state plant and animal species of special concern (EG&G, 1991e).

Habitat potentially suitable for four sensitive plant species: the Colorado butterfly plant (Gaura neomexicana var. coloradensis), the diluvium lady's tresses orchid (Spiranthes diluvialis) the forktip threeawn (Aristida basiramea) and the toothcup (Rotala ramosior), is also present on the RFP site. However, no individuals of these species were observed during the reconnaissance surveys.

The bald eagle (Haliaeetus leucocephalus) was identified to occasionally use habitat between 0.3 and 1.1 miles from the RFP site during the winter months. Habitat use by bald eagles on the site is expected to be causal, if it occurs at all. No bald eagle nests occur on the RFP site (DOE, 1990a).

Results of RFP studies also indicate that habitats potentially suitable for the endangered peregrine falcon (Falco peregrinus) and the ferruginous hawk (Buteo regalis) are present at the RFP site (EG&G, 1991g). Although the peregrine falcon was not observed during the reconnaissance level surveys,two historic eyries are present within 10 miles of the RFP site. The Peregrine Falcon Recovery Plan (USFWS, 1984) discourages land-use practices that would adversely alter the character of their hunting habitat or prey base within a 10-mile radius of a nesting cliff (including historical sites).

Potentially suitable habitat is also present for six sensitive wildlife species, including: white-faced ibis (Plegadis chichi), ferruginous hawk (Buteo regalis), mountain plover (Charadrius montanus), long-billed curlew (Numenius americanus), Preble's meadow jumping mouse (Zapus hudsonius

preblei), and swift fox (Vulpes velox). Insufficient information is available to determine if habitat for the sensitive species Texas horned lizard (Phyrnosoma cornutum) is present on the RFP site. Prior to undertaking actions that may affect potentially suitable habitat, focused surveys will be conducted to determine if sensitive wildlife species are present.

The results of the aforementioned studies that pertain to fauna indicate that habitat potentially suitable for the endangered black-footed ferret (Mustele nigripes) is present on the RFP site. Black-footed ferrets require prairie dog colonies or complexes of smaller prairie dog colonies as habitat. In the northeast area of the plant site, approximately 15 acres were identified as a prairie dog colony location. These 15 acres are part of a larger colony comprised of an estimated 47 acres that is dissected by Highway 128. This acreage is part of a 753-acre complex that primarily occurs east of Indiana Street. Although the 47-acre colony by itself is insufficient to support black-footed ferrets, the larger complex is potentially suitable habitat for ferrets. This 753-acre complex is fragmented by several major roads and highways. No confirmed sightings have been reported for this area, but several unconfirmed sightings have been reported for the Denver area. Surveys of the 753-acre complex may be required to determine if the 15 acrespresent on the RFP site is habitat for the black-footed ferret. Surveys will be required only if potential development directly impacts this colony. Based upon the information gathered for this survey, the USFWS is not considering the area of the RFP site as a re-introduction site for black-footed ferrets.

2.2.7 Sensitive Environments - Wetlands and Floodplains

The relevant laws and acts which protect wetlands and floodplains include: NEPA, Executive Order (E.O.) 11990-Protection of Wetlands; all pertinent sections of the CWA; the Fish and Wildlife Act plus associated coordination acts; and regulations promulgated under 10 CFR Part 1022 - DOE Compliance with Floodplain Wetlands Environmental Review Requirements. The rules promulgated under NEPA 42 U.S.C. 4321, et seq., in 40 CFR parts 1500 through 1508 state that all federal agencies are required to consider the environmental effects to wetlands and floodplains for any proposed action (EG&G, 1990d).

Aerial photography for the 903 Pad, Mound, and East Trenches Areas was examined for wetlands identification, followed by limited site inspection (EG&G, 1990a). Wetlands have also been identified along both the Woman Creek and SID drainage areas (EG&G, 1990a). The SID receives surface water runoff from the southern part of the RFP facility with additional contributions from OU2. However, drainage contribution to the SID from OU2 is minimal. Evenly spaced drop structures along the SID have lowered flow velocities, increased sediment accumulation, and created fairly dense linear stands of wetlands. From a point due south of the 903 Pad and extending to Pond C-2, approximately 0.15 acres of wetlands are contained within this portion of the SID. Two isolated stands of wetlands have also been identified southeast of IHSS 140, where ground water emerges as seeps or springs. These two areas are each less than 500 square feet in size. Wetland species observed were primarily common cattails (Typha latifolia) (greater than 95 percent predominance), spike rush(Eleocharis macrostachya) and bullrush (Scirpus americanus). The wetlands primarily function as flow attenuation features with additional minor contributions to wildlife habitat and water quality enhancement. Drainage contribution to the SID from OU2 is minimal.

A detailed floodplain analysis has delineated a narrow, 100-year floodplain along the linear channel configuration of Woman Creek estimated to be 100-feet wide (DOE, 1991a). Woman Creek is an intermittent stream flowing

primarily in response to precipitation events and interaction between surface water and shallow ground water. Initial site characterization studies completed in 1986 record measurable flow occurrences only at 4 of the 11 gauging stations along the drainage. Flow data for each of the four gauging stations was less than 10 gallons per minute (DOE, 1990a).

Each of the proposed actions for the Subsurface IM/IRA, along with their anticipated impacts to floodplains and wetlands, are described in Section 4. However, since the proposed actions are not located in the above described floodplains or wetlands, it should be noted that the provisions of 10 CFR 1022, DOE Compliance with Floodplain/Wetlands Environmental Review Requirements, do not apply.

2.2.8 Cultural Resources

NEPA (1969), the National Historic Preservation Act of 1966 (Public Law 89-665), and subsequent law amendments (Public Laws 91-243, 93-54, 94-422, 94-458) provide that all federal agencies implement programs for the protection of cultural resources.

A Cultural Resources Survey of the RFP was conducted between 31 May and 23 June 1991 that identified 45 cultural resources, none of which were recommended as eligible for listing on the National Register of Historic Places (EG&G, 1991a). In addition to the 45 sites located during the 1991 survey, thereare six previously identified historic sites that were previously determined not to be eligible for listing on the National Register for Historic Places. However, these sites were not re-evaluated during this site-wide archeological survey. The State Office of Archeology and Historic Preservation has determined that any action in the vicinity of OU2 will not impact cultural resources (Burney, 1989).

2.3 CONTAMINANTS - DESCRIPTION AND SOURCES

The following discussion of contaminant types and distribution are based on data and interpretations presented in the Phase II RI/FS Work Plan (EG&G, 1990c), Draft Remedial Investigation Report (Rockwell, 1987a), and Draft Remedial Investigation Plan (Rockwell, 1988c). Soil, ground water, and surface water were sampled and analyzed for radionuclides and for the Hazardous Substance List (HSL) organics and inorganics. In general, soils in the vicinity of the IHSSs were found to contain low concentrations of VOCs, and occasionally elevated concentrations of plutonium (Pu) and americium (Am). Most soil samples contained phthalates, but this may be a result of field or laboratory contamination of the samples. Carbon tetrachloride (CCl[4]), tetrachloroethene (PCE), and trichloroethene (TCE) are the primary VOCs found in the upper hydrostratigraphic unit (this includes the alluvium and hydraulically interconnected bedrock sandstone [uppermost sandstone]) ground water flow system at OU2. Trace elements occurring above natural background levels in ground water include: strontium, barium, copper, and nickel, and to a lesser extent chromium, manganese, selenium, lead, zinc, and molybdenum. Also, major cations and anions and total dissolved solids are somewhat elevated above background throughout and downgradient of the 903 Pad, Mound, and East Trenches Areas. Uranium-238 is the predominant radionuclide occurring above background in the upper hydrostratigraphic unit ground-water flow system. An evaporative concentration conceptual model has been advanced that may explain concentrations of high total dissolved solids, metals, and uranium in ground water at OU2.

Organic contamination is observed in seeps downgradient of the 903 Pad and in the upper reaches of South Walnut Creek at the Mound Area. Also, there are somewhat elevated concentrations of total dissolved solids, major ions,

strontium, zinc, and uranium at many of the surface water stations. Seeps downgradient of the 903 Pad have also been found to contain Pu and Am. This is postulated to be due to the presence of contaminated suspended solids (i.e., soil) in the seep water, and is based on the chemistry of Pu and Am in natural water systems and studies performed by EG&G. The literature indicates that Pu is practically insoluble under oxidizing and near-neutral conditions (Cleveland, 1979) and Am strongly complexes with colloidal material and should exist in the particulate fraction (Orlandini et al., 1990). That Pu and Am in surface seep water is particulate in nature is also supported by preliminary studies performed by EG&G (EG&G, 1991). The studies involved successive filtration of OU2 seep water with filter media possessing various pore sizes (i.e., 0.45 micrometers (m), 0.2 m, and 0.1 m). The filtrates were then analyzed for Pu and Am. The analyses indicate that Pu and Am in surface water at OU2 are associated with the particulate phase. A more, comprehensive successive filtration study to examine the distribution of Pu and Am (i.e., dissolved versus particulate) in OU2 surface water is being planned by EG&G at this time.

Pu and Am occur above background in surface soils. Other radionuclides and trace metals occur at low concentrations and are infrequently above background, but may also be soil contaminants at the 903 Pad, Mound, and East Trenches Areas. Data suggest Pu and Am were released to soils in the area via wind dispersion during initial remedial efforts at the 903 Drum Storage Site. These radionuclides occur in surface soils throughout the 903 Pad, Mound,and East Trenches Areas and other downwind areas to the southeast.

The following discussion provides additional details of contamination in OU2 ground water, soils, sediments, and surface water. Comprehensive ground-water monitoring at the RFP has occurred since 1986. Wells have been installed throughout the property and are sampled quarterly. Appendix B-1 presents a summary of VOCs, radionuclides, metals, and inorganic contaminant concentrations above detection limits in the unconfined ground-water system at OU2. The extent of soil contamination at the 903 Pad, Mound, and East Trenches Areas was determined from soil samples collected in 1987 during the Phase I RI (Appendix A). Samples were collected from boreholes drilled in and adjacent to known IHSS locations (Figure 2-9). Two-foot intervals were composited for VOCs, and 2- to 10-foot intervals were composited for all other analytes. Boreholes were not drilled into sites still containing wastes (the Trenches and 903 Pad) due to potential health hazards to field workers and potential for release of waste constituents to the environment. Data for surface water and sediments has not been tabulated in this IM/IRAP because these media are not directly relevant to the IM/IRA. Nevertheless, a discussion of existing contamination in these media is provided in order to present a comprehensive description of the nature and extent of contamination at OU2.

2.3.1 Background Characterization

In order to facilitate the interpretation of chemical results in non-background areas, a background characterization program has been implemented to define the spatial and temporal variability of naturally occurring constituents. Field work was conducted in 1989, and a draft Background Geochemical Characterization Report was prepared and submitted to the regulatory agencies on 15 December 1989 (Rockwell International, 1989a). The draft report was updated in December 1990 to include additional rounds of ground-water and surface watersamples. The document summarizes the background data for ground water, surface water, sediments, and geologic materials, and identifies preliminary statistical boundaries (tolerance intervals) of background variability. Spatial variations in the chemistry of geologic materials and water were addressed by placing sample locations

throughout background areas at the Plant. Evaluation of temporal variations in water chemistry is ongoing.

2.3.2 Soil Contamination

The following discussions include a summary of VOCs, radionuclides, and metals concentrations that are above detection limits in soils at OU2. This discussion is considered preliminary because soil samples have not been collected in the actual waste burial areas (IHSS). This type of sampling will be conducted during the Phase II RI.

2.3.2.1 Volatile Organic Contamination

VOCs (including: PCE, TCE, toluene, 2-butanone, CCl[4], acetone, and methylene chloride) were reported in samples from the 903 Pad and East Trenches Areas. Occurrences of total xylenes, ethylbenzene, and toluene were also reported for the 903 Pad Area, whereas 1-2-dichloroethane (1,2-DCA), 1,1,1-TCA, and 1,1,2-Trichloroethane (1,1,2-TCA) were reported in an East Trenches borehole. The Mound Area soils, like other portions of OU2, contained acetone (hundreds of micrograms per kilogram) and methylene chloride (typically tens of micrograms per kilogram) at concentrations too low to unambiguously demonstrate contamination with these compounds. Other organic constituents in the Mound Area (PCE, CHCl[3], 1,2-DCA) were less numerous and at lower levels than at other areas within OU2.

2.3.2.2 Inorganic Contamination

Radionuclide Contamination

Based on the Phase I RI borehole data, Pu and Am are the principalradionuclide contaminants exhibiting elevated concentrations in soils. Highest concentrations occurred in samples that included the surface soils in the area, and were typically on the order of 100 picoCuries per gram (pCi/g). Because many of the surface soil samples were mixed into large composites, the Phase I RI data do not eliminate the presence of radionuclides other than Pu and Am. Cesium-137, tritium, and uranium were detected, albeit at nearbackground concentrations and in fewer than 10 samples. Surface contamination of soils with Pu and Am was further demonstrated by recent aerial and in situ radiological surveys (EG&G, 1990a; EG&G, 1991b) (Figures 2-10 and 2-11). The radioactivity detected in that survey was associated with known radioactive material storage and handling areas (i.e., the 903 Pad), and was attributed to Pu, Am, and a uranium decay product. Soil sampling indicated elevated concentrations of americium in soils east of the 903 Pad Lip Site as high as 97 pCi/g, and by inference from their expected activity ratio, plutonium as high as 500 pCi/g. Subsequent analysis of samples from the area with high americium concentrations indicated plutonium concentrations as high as 457 pCi/g. The cesium-137 activity at RFP is at a level consistent with global fallout.

Metals Contamination

Several metals occurred above background in soil samples (aluminum, arsenic, barium, cadmium, calcium, iron, mercury, manganese, lead, antimony, vanadium, and zinc), although most exceeded background by less than a factor of two and/or in only one or two samples. Appendix A presents maximum metal concentrations in soils.

2.3.3 Ground-Water Contamination

2.3.3.1 Volatile Organic Contamination

The primary VOCs in ground water (CCl[4], PCE, and TCE) are portrayed by isopleths for alluvial ground water in Figures 2-12 through 2-14and bedrock ground water in Figures 2-15 through 2-17. This data provides a representative "snapshot" of ground-water contamination at OU2, i.e., previous and subsequent water quality data show similar patterns of ground-water VOC contamination. The ground-water data in Appendix B-2 confirm the relative dominance of CCl[4], PCE, and TCE in alluvial and shallow bedrock ground water at OU2 compared to other VOCs, and documents occurrences of 1,1 -dichloroethane (1,1DCA), 1,1-dichloroethene (1,1-DCE), 1,2-dichloroethene (1,2-DCE), and vinyl chloride (all are possible degradation products of the principal contaminants), and 1,1,1-trichloroethane (1,1,1-TCA), total-1,2-DCE, 2-hexanone, chloroform (CHCl[3]), methylene chloride, acetone, and carbon disulfide. The latter four analytes were reported at levels below detection limit and therefore represent only estimated values.

A review of Figures 2-12 through 2-17 suggest that the 903 Pad is the main source of CC1[4], with possible contributions from the northern East Trenches. Also, the Mound Area appears to be the main source of PCE, and TCE occurs throughout OU2 implying multiple sources.

2.3.3.2 Inorganic Contamination

Radionuclides

Appendix B-2 shows that dissolved concentrations of the uranium isotopes (U-234, U-235, and U-238) have been above background at OU2. The maximum concentration for uranium 238 was 28 +- 2 picoCuries per liter (pCi/) in well 1287 in the 903 Pad Area. Numerous occurrences of uranium at lower concentrations and in wells completed in diverse lithologies demonstrate that the distribution of uranium is not thoroughly delineated at OU2. Review of unvalidated Pu data (total and dissolved) for ground-water wells east-southeast of the 903 Pad indicates Pu in ground water is generally at non-detectable levels (error term is greater than the reporter value). The highest concentrations of Pu reportedwere in well 2-71 (total plutonium = 1.9 +- 1 pCi/ on 3/11/87 and 32 +- 3 pCi/ in 1988). However, there are three other sampling events showing total Pu was non-detectable, and the reported value for 1988 is suspect because an exact date for the sample cannot be determined from the documentation. Furthermore, there are seven other analyses for dissolved plutonium for this well where the radionuclide was non-detectable. Because Pu and Am are infrequently detected in ground water at this well and elsewhere, it is uncertain whether these radionuclides are actual ground-water contaminants.

Metals

Metals that exceeded background in one or more wells in the second quarter of 1989 include: aluminum, antimony, arsenic, barium, cadmium, chromium, copper, iron, lead, lithium, manganese, mercury, molybdenum, nickel, potassium, selenium, silver, strontium, vanadium, and zinc. A summary of multiple sampling events (Appendix B-1) shows that only a subset of these analytes repeatedly exceed background and/or exceed background by a wide margin. The sporadic exceedances of background, and the absence of apparent gradients in metal concentrations with respect to IHSSs, hinders drawing definite conclusions as to whether these constituents are derived from IHSSs.

Major Ions

Major ions and total dissolved solids (TDS) are somewhat elevated above background throughout and downgradient of the 903 Pad, Mound and East Trenches Areas (Appendix B-2). Total dissolved solids typically ranged

between 400 and 1,000 milligrams per liter (mg/l); chloride was generally 30 to 100 mg/l, nitrate was 2 to 10 mg/l, and most sulfate concentrations were between 10 and 100 mg/l in the second quarter of 1989. In general, major cations were accordingly elevated. The highest concentrations of major ions are in well 2987 southeast of the 903 Pad, although TDS in ground water at the northernmost wells (34-87 and 35-87) was also quite high in (~ 1,000 mg/l).

2.3.4 Surface Water Contamination

Surface water and surface seep stations in the vicinity of the 903 Pad, Mound, and East Trenches Areas were sampled during field activities from 1986 through 1991. The following discussion is based on all available data because many seeps or stream stations were dry during some samplings. Surface water monitoring locations are shown in Figure 2-18. The surface water seeps are immediately downslope and southeast of the 903 Pad Area, and downslope and north of the Mound Area and East Trenches Areas.

Because surface water at seeps and in streams represents groundwater discharge (intermittent discharge with respect to streams), the surface water compositions are similar to those of local ground water. The data for both media show that PCE, TCE, CCl[4], and their degradation products are the principal VOCs and show very similar major ion contents as well. However, there is enough variability within stations so that it is not possible to demonstrate surface/groundwater connections on a well-by-well, seep-by-seep basis.

Seeps in the vicinity of the 903 Pad Lip Site have had significant concentrations of Pu and/or Am. However, the samples contained suspended solids, and surface soils in the vicinity of the seeps are contaminated with radionuclides. Furthermore, total radiochemistry data do indicate notably higher Pu and Am concentrations than in filtered samples (0.45 m nominal pore size), demonstrating that most of the radionuclides are in a particulate form. Therefore, the local soils represent the most direct potential source for seep contamination. There is no immediate threat to public health and the environment posed by surface water contamination because the affected surface water is contained within the Plant boundary by existing detection ponds, and is treated and monitored prior to discharge for removal of volatile organic contaminants and suspended particulates to which radionuclides, ifpresent, are likely to adsorb.

2.3.5 Air Contamination

The 903 Pad Area is recognized as the principal source of airborne Pu contamination at the RFP. An extensive air monitoring network known as the Radioactive Ambient Air Monitoring Program (RAAMP) is maintained at the Plant in order to monitor particulate emissions from the 903 Pad Area and other Plant facilities. Historically, the particulate samplers located immediately east, southeast, and northeast of the 903 Pad, Mound, and East Trenches Areas have shown the highest Pu concentrations. This finding is corroborated by the results of soil surveys that indicate elevated Pu concentrations to the east, particularly southeast of the area. However, RAAMP has found ambient air samples for Pu to be well within the DOE guidelines of 20.0 x 10[6] pCi/ established for the protection of human health (Rockwell International, 1987b).

2.3.6 Summary of Contamination

The Phase I RI investigations of environmental media lead to the general conclusions that volatile organic and inorganic contamination in soils, ground water, and surface water and radionuclide contamination in soils

exist around several OU2 IHSS. The RI also determined that the distribution and magnitude of the contamination can be better delineated via sampling and analysis planned for the Phase II investigation.

TCE, PCE, and CCl[4] are the principal organic contaminants in soils, surface, and ground waters, with lesser amounts of their degradation products and other compounds at numerous sampling sites throughout OU2. Apparent Pu and Am in surface water samples are other apparent indicators of RFP-derived contamination.

Several metals and other inorganic constituents (including uranium) are also above background in the environmental media, but the data do notpermit unambiguous conclusions with regard to contamination. The uncertainty results in part from the absence of clear concentration gradients and from the limited knowledge of the inorganic composition of waste sources in OU2. Natural processes (e.g., evaporative concentration) may govern the source and distribution of such inorganic constituents. This will be further investigated in the context of long-term remediation at OU2.

2.4 ANALYTICAL DATA

Appendix A of Volume II presents a compilation of volatile organic, inorganic, and radiochemistry data for all ground-water monitoring stations at OU2 that are available at this time. Some of the data have been validated; they are identified in the appendices by a qualifier adjacent to each datum. The qualifiers "V" (valid), "A" (acceptable with qualifications), and "R" (rejected) are assigned in accordance with the ER Program Quality Assurance/Quality Control (QA/QC) Plan (Rockwell International, 1989c). Rejected data either did not conform to the QA/QC procedures, or insufficient documentation exits to demonstrate conformance with these procedures. These data, at best, can only be considered qualitative measures of the analyte concentrations. The schedule for the IM/IRA does not permit waiting for all data to be validated. However, the validated data and their similarity to invalidated data are considered sufficient for this IM/IRAP/EA.

2.5 SITE CONDITIONS THAT JUSTIFY AN IM/IRA

The IM/IRA will provide information for selection, design, and implementation of the final remedial action that addresses subsurface VOC contamination.

As discussed in Section 1, there is no immediate threat to public health and the environment posed by subsurface VOC contamination at OU2. Cleanup of subsurface VOC contamination at OU2 will, therefore, be addressed in designing and implementing final remedial actions. However, uncertainties with respect to the OU2 subsurface geology and its effect on site-specific remedial technology performance presents many challenges for selection and design of final actions. Thus, the IM/IRA is an investigative tool to resolve such uncertainties and streamline the RI/FS/remedial action (RA) process which is, the primary justification for the proposed Subsurface IM/IRA at OU2.

SECTION 3

IDENTIFICATION OF SUBSURFACE IM/IRA OBJECTIVES

3.1 OBJECTIVES OF INTERIM MEASURES/INTERIM REMEDIAL ACTION

The primary objective of the Subsurface IM/IRA is to provide information that will aid in the selection and design of final remedial actions at OU2

that will address removal of suspected residual free-phase VOC contamination. In general, the information to be collected includes subsurface characterization and site-specific technology performance data, which can be used in the FS remedial alternatives evaluation and final remedial system design. The IM/IRA will be comprehensive in that subsurface geological data will be collected for a minimum of three different OU2 locations. Based on the meetings between DOE, EPA, and CDH during the Fall of 1991 (Section 1), DOE is proposing this Subsurface IM/IRAP/EA that specifies treatability testing at the 903 Pad, Mound, and East Trenches Areas for the implementation and evaluation of VOC source removal technologies.

3.2 COMPLIANCE WITH ARARS AND PROTECTION OF HUMAN HEALTH AND THE ENVIRONMENT

The NCP [40 CFR 300.430 (e)] requires that, in development of remediation goals, the following be considered:

- ARARs.
- For systemic contaminants, concentration levels that will not cause adverse effects to the human population and sensitivesubgroups over a lifetime of exposure.
- For carcinogens, exposure levels represent an upper bound lifetime cancer risk between 10[-4] and 10[-6]. The 10[-6] risk level is to be used as a point of departure when ARARs are not available or are not sufficiently protective because of multiple contaminants or multiple exposure pathways.
- Factors related to detection limits.
- For current or potential sources of drinking water, attainment of Maximum Contaminant Level Goals (MCLGs) or Maximum Contaminant Levels (MCLs), if MCLGs are zero.
- Attainment of CWA ambient water quality criteria (AWQC), where relevant and appropriate.

The IAG, in paragraph 150, states "Interim Remedial Actions/Interim Measures shall, to the greatest extent practicable, attain ARARs." Also for interim actions, the NCP [40 CFR 300.430(f)] specifically notes that an ARAR can be waived if the action is to become part of the final remedy that will attain ARARs.

This section identifies and analyzes ARARs relevant to the proposed Operable Unit No. 2 Subsurface IM/IRA. Because a remedial action would be considered an on-site IM/IRA to be administered under CERCLA, only substantive and not administrative requirements of regulations (such as RCRA) apply. Permits, for example, are not required (per paragraph 121 of the IAG).

3.2.1 Applicable or Relevant and Appropriate Requirements

"Applicable requirements," as defined in 40 CFR 300.5, mean "those cleanup standards, standards of control, and other substantive requirements, criteria, or limitations promulgated under federal environmental or state environmental or facility siting laws that specifically address a hazardoussubstance, pollutant, contaminant, remedial action, location, or other circumstance found at a CERCLA site. Only those state standards that are identified by a state in a timely manner and that are more stringent than federal requirements may be applicable." "Relevant and appropriate

requirements," also defined in 40 CFR 300.5, mean "those cleanup standards, standards of control, and other substantive requirements, criteria, or limitations promulgated under federal environmental or state environmental or facility siting laws, that, while not 'applicable' to a hazardous substance, pollutant, contaminant, remedial action, location, or other circumstance at a CERCLA site, address problems or situations sufficiently similar to those encountered at the CERCLA site that their use is well suited to the particular site. Only those state standards that are identified in a timely manner and are more stringent than federal requirements may be relevant and appropriate." According to CERCLA 121(d)(2), in order to be considered an ARAR, a state requirement must have been "promulgated." As defined in 40 CFR 300.400(g)(4) of the NCP, the term "promulgated" means that the requirement is of general applicability and is legally enforceable.

3.2.2 Items to be Considered

In addition to ARARs, advisories, criteria, or guidance may be identified as to be considered (TBC) for a particular release. As defined in 40 CFR 300.400(g)(3), the TBC category consists of advisories, criteria, or guidance developed by EPA, other federal agencies, or states that may be useful in developing remedies. Unlike ARARs, use of TBCs is discretionary.

3.2.3 ARAR Categories

In general, there are three categories of ARARs. These categories are:

- Ambient or chemical-specific requirements.
- Location-specific requirements.
- Performance, design, or other action-specificrequirements.

Each category is discussed in more detail below.

3.3 AMBIENT OR CHEMICAL-SPECIFIC REQUIREMENTS

Ambient or chemical-specific requirements set health- or risk-based concentration limits in various environmental media for specific hazardous substances or pollutants. These requirements set protective cleanup levels for the chemicals of concern in the designated media, or may act as action-related requirements in indicating a safe level of air emission or wastewater discharge. The chemical-specific ARARs identified herein are used in defining the remediation goals for discharge of treated ground water to surface water.

ARARs are derived primarily from federal and state health and environmental statutes and regulations. Where background concentrations for constituents are above the ARAR for that constituent, a waiver from the ARAR may be appropriate (e.g., technical impracticability).

A summary of ARARs for the contaminants found to exceed background in OU2 ground water are presented in Appendix C, Table C-1 and includes ARARs for volatile organics, metals, conventional pollutants, and radionuclides. TBCs are also identified in Table C-1 where ARARs do not exist, and are used as goals for ground-water treatment, where necessary to be protective.

The two sets of ARARs identified in Table C-1 are those previously established for the OU1 ground-water treatment facility and for the OU2 South Walnut Creek surface water treatment facility. These ARARs were established by the regulatory approval of the respective IRAPs that define

the IM/IRAs for OU1 and OU2. Both of these treatment facilities are candidates for the treatment of ground water extracted during the Subsurface IM/IRA. A third candidate facility is the Building 231/374 treatment systems. The Building 231/374 facility is a zero discharge treatment system, therefore, water quality chemicalspecific ARARs are not applicable.

There are a number of potential OU2 ground-water contaminants for which ARARs were not identified in the respective OU1 and OU2 IRAPs, i.e., these contaminants were not expected to be present in the influent based on the quality of the water the systems were designed to treat. These contaminants are identified in Table C-1. For this IM/IRA, ARARs or TBCs (in the absence of an ARAR) have been identified for these contaminants by applying the ARAR rationale in the respective IRAPs, and selecting the rationale (and ARAR) that was most stringent. This technique is used for the Subsurface IM/IRA to provide conservative effluent standards for all potential OU2 ground water contaminants. It is not, however, considered a basis for establishing ARARs for future remedial efforts at the RFP. DOE is preparing a consolidated approach to establishing ARARs for future remedial activities that it plans to offer to EPA and CDH in the near future. This consolidated approach will provide the premise for discussions with EPA and CDH on the ARAR selection methodology to be used for remediation at all operable units at the RFP.

Of the elements/compounds detected in ground water at OU2, ARARs or TBCs cannot be identified from environmental regulations and guidance for: 4-methyl-2-pentanone, 2-hexanone, calcium, magnesium, potassium, sodium, strontium, bicarbonate and cesium[137]. .

(Note: As discussed in Section 2.3.3., cesium[137] is not an RFP contaminant.) For these constituents, background concentrations (EG&G, 1990b) are used as goals for the IM/IRA. For organic contaminants, background is considered the Contract Laboratory Program (CLP) Contract Required Quantitation Limits (CRQL).

Regardless of ARARs, the system ultimately used for treatment of ground water in this IM/IRA will be selected based on the ability of the treatment system to remove the contaminants actually measured in the extracted water, e.g., the OU1 facility will not be used if the ground water contains above background plutonium or americium concentrations because this facility was not designed for their removal. (Note: The unit processes in the OU1 facility potentially can remove plutonium/americium, but treatment performance for removal of these radionuclides would have to be demonstrated before OU2 ground water is transferred there for treatment.) Likewise, the Building 231 facility utilizes activated carbon for organic contaminant removal, and the presence of methylene chloride, vinyl chloride, chloroform or ketones in extracted ground water would render this facility inappropriate for use. The South Walnut Creek Basin Treatment System has been designed to treat water containing all of the potential OU2 contaminants. Based on current data, this treatment system is the preferred system for the Subsurface IM/IRA. Treatment performance considerations for selection of the Subsurface IM/IRA ground-water treatment system is discussed further in Section 4.

3.4 LOCATION-SPECIFIC REQUIREMENTS

Location-specific ARARs are limits placed on the concentration of hazardous substances or the conduct of activities solely because they occur in certain locations. These may restrict or preclude certain remedial actions or may apply only to certain portions of a site. Examples of location-specific ARARs that pertain to the IM/IRA are federal and state siting laws for hazardous waste facilities (40 CFR 264.18, fault zone, and floodplain

restrictions), and federal regulations requiring that actions minimize or avoid adverse effects to wetlands (40 CFR Part 6 Appendix A and 40 CFR Parts 230-231).

More specifically, in addition to the requirements described above, pertinent location-specific ARARs include: Colorado requirements for siting of hazardous waste facilities and wastewater treatment facilities (Colorado Revised Statue 25-15-101, 203, 208, 302 and 25-8-292, 702, respectively); National Historic Preservation Act requirements for preservation of significantarticles and historic properties (36 CFR Parts 65 and 800, respectively); federal critical habitat protection requirements (50 CFR Parts 200, 402 and 33 CFR Parts 320-330); and federal requirements for the protection of fish and wildlife resources (40 CFR 6.302).

A summary of location-specific ARARs, which this IM/IRA will attain to the greatest extent practicable, is presented in Table C-4.

3.5 PERFORMANCE, DESIGN, OR OTHER ACTION-SPECIFIC REQUIREMENTS

Performance, design, or other action-specific requirements set controls or restrictions on particular kinds of activities related to management of hazardous substances or pollutants. These requirements are not triggered by the specific chemicals present at a site, but rather by the particular IM/IRA actions that are part of this plan. Action-specific ARARs are technology-based performance standards, such as the Best Available Technology (BAT) standard of the Federal Water Pollution Control Act. Other examples include RCRA treatment, storage, and disposal standards, and CWA pretreatment standards for discharges to publicly owned treatment works (POTW).

RCRA land disposal restrictions (LDR) for certain contaminants (40 CFR Part 268.40) are also action-specific ARARs for the disposal of secondary wastes generated during water treatment. Any wastes, hazardous or not, are subject to CERCLA section 121(d)(3), also known as the "off-site policy." The "off-site policy" requires that CERCLA wastes be shipped off site only to facilities in compliance with applicable federal and state laws. Action-specific ARARs that will be attained by the IM/IRA to the greatest extent practicable are included in Table C-3. Table C-2 presents RCRA LDRs that are potentially ARAR for placement or land disposal involving non-effluent wastes (e.g., treatment sludges, excavated soils, used treatment materials) if they may be determined to contain hazardous wastes. LDR requirements may be relevant andappropriate for wastes that are not hazardous wastes, as defined in 40 CFR Part 261, but do contain hazardous substances. Any wastes generated by the IM/IRA will be evaluated to determine if they are identifiable as hazardous wastes. At present, no determination has been made whether the anticipated contaminants of wastes from the IM/IRA are listed hazardous wastes. However, IM/IRA wastes, such as spent carbon may be found to be characteristically hazardous (40 CFR part 261 Subpart C).

Action-specific ARARs also exist for air emissions from this IM/IRA. The Colorado Air Quality Control Commission (AQCC) has established emission control regulations for the protection of state air quality. Relative to this IM/IRA, AQCC regulations provide pertinent requirements that must be considered. Action-specific ARARs, which the IM/IRA will attain to the greatest extent practicable, are included in Table C-3.

AQCC Regulation 7 (5 CCR 1001-7) provides requirements for sources of VOCs that are associated with the formation of ozone. Regulated sources of VOCs must implement Reasonably Achievable Control Technology (RACT) and describe any control measures in an emission permit application to the Air Quality Control Division (AQCD). According to AQCC Regulation 3, Section III.D, the

threshold for the permit requirement is emission of 1 ton or more of VOCs per year. As defined in Section G of the AQCC Common Provisions Regulations, RACT means a technology that will achieve the maximum degree of emission control that a particular source is capable of meeting, and which is reasonably available considering technological and economic feasibility. The IM/IRA will not emit VOCs in excess of 1 ton/year because a vapor treatment system will be used to remove in excess of 99 percent of the VOCs. However, the treatment system would constitute a RACT.

AQCC Regulation 8 (5 CCR 1001-8) includes requirements for thecontrol of hazardous air pollutants. Of the potential contaminants in this IM/IRA, beryllium, benzene, mercury, lead, and vinyl chloride are considered hazardous air pollutants according to this regulation. With the exception of lead, the requirements of Regulation 8 are neither applicable nor relevant and appropriate to this IM/IRA. In general, the controls of Regulation 8 apply to emission sources that use or manufacture material containing the hazardous air pollutant. Since this IM/IRA will neither use nor manufacture any of the hazardous air pollutants, the emission limit provisions of Regulation 8 are not ARAR, however, they do provide useful guidance to be considered. With respect to lead, the emission limit of 1.5 micrograms per cubic meter (ug/m[3]) applies to any stationary source. Therefore, the standard may be applicable to the IM/IRA, and accordingly, has been applied as ARAR.

Under EPA regulations at 40 CFR Part 61 Subpart H, hazardous air pollutant restrictions also exist for radionuclide emissions at DOE facilities. These regulations require monitoring to ensure that any radionuclides emitted do not result in any member of the public receiving an effective dose equivalent or more than 10 milliradiation equivalent man per year (mrem/yr). Because this standard applies to RFP as a whole, plant emissions are regularly assessed. The plant emissions have been found to fall orders of magnitude below the standard. Emissions from the IM/IRA will be monitored and the results incorporated with the plant data.

A table summarizing restrictions on IM/IRA air emissions is presented in Table C-5.

DOE requirements for worker protection in hazardous waste operations and emergency response (DOE Order 5480) are applicable to workers involved in hazardous substance-related activities. Even though these requirements are not environmental in nature, and therefore, are not considered ARARs,they must be satisfied.

SECTION 4

PROPOSED ACTIONS

This IM/IRA involves application of in situ vacuum-enhanced vapor extraction at three different subsurface environments at OU2 for removal of suspected, residual free-phase VOCs from the vadose and saturated zones. The three subsurface sites selected for implementation of the IM/IRA differ in their expected geology and nature of contamination. Each of the three selected sites are located within one of the three primary OU2 areas: 903 Pad, Mound, and East Trenches. As discussed in this section, each of the sites offer unique challenges for in situ remediation of the subsurface.

Implementation of the proposed in situ vacuum-enhanced vapor extraction actions may be complicated by uncertainties resulting from incomplete site characterization of OU2. A phased implementation of the proposed actions is therefore proposed to ensure project success. The planned phases of implementation include:

- Location of test sites.
- Pilot testing.
- Post-pilot operation (if deemed beneficial).

The first phase is the location of suitable test sites at the 903 Pad, Mound, and East Trenches Areas. Data from the Phase II RI will be used to pinpoint locations for the vapor extraction and injection wells. In the event that these data do not provide enough information to select well locations, a soil vapor survey will be conducted.

The second phase involves in situ pilot testing of the proposed vapor extraction systems at each of the test sites. Information collected during the pilot studies will aid in the selection, design, and implementation of final subsurface VOC removal actions at OU2. Information from the pilot study phase will also be used to assess the benefit of pursuing the final phase of the IM/IRA, post-pilot study operation of the systems with system modifications as appropriate.

The final phase of IM/IRA implementation is post-pilot operation (if deemed beneficial) of the vapor extraction systems at the three OU2 test sites. EPA OSWER Observational/Streamlined Approach methodology has been used to formulate the proposed actions to minimize difficulties in the execution of this IM/IRA. The Observation/Streamlined Approach involves development of a remedial action based on probable site conditions that are identified using existing information, and that are modified as necessary as additional information is gained during implementation.

Prior to presentation of the proposed actions, it is useful to consider the rationale behind selection of in situ vacuum-enhanced vapor extraction for this IM/IRA. This background information is presented in Section 4.1. Section 4.2 describes the process that is used to critically evaluate the effectiveness, implementability, and environmental impact of the proposed actions. Sections 4.3 through 4.5 present and evaluate each of the proposed actions at the 903 Pad, Mound, and East Trenches Areas, respectively. Section 4.6 presents a detailed description of existing or planned RFP water treatment facilities that could potentially be used to treat contaminated ground water generated during Subsurface IM/IRA dewatering operations. Section 4.7 presents an environmental assessment of the No Action Alternative with respect to OU2 subsurface VOC contamination, and Section 4.8 provides a summary comparison of environmental impacts from the proposed remedial actions and the No Action Alternative.

4.1 RATIONALE FOR IM/IRA TECHNOLOGY SELECTION

NCP guidance states that "few alternatives, and in some cases,perhaps only one, should be developed for interim actions." Based on a review of technologies available for in situ removal/destruction of VOCs, only one remedial alternative, in situ vacuum-enhanced vapor extraction, was selected for immediate implementation in the Subsurface IM/IRA. A second technology, in situ steam stripping, is also being considered for investigation as part of this IM/IRA because it has the potential to recover both VOCs and radionuclides, and the technology is currently being tested by DOE.

The technology review process involved identification of potentially feasible VOC-removal/destruction technologies followed by evaluation with respect to the following criteria:

- Achieve IM/IRA objective.

- Address the source of the dissolved-phase ground-water plume.
- Minimize the risk of spreading contamination.

As discussed in Section 3, the primary objective of the IM/IRA is to collect information that will aid in selection and design of final OU2 remedial actions that address subsurface residual free-phase VOC contamination.

Source removal played an important role in the technology review process. The organic contaminants at OU2 are primarily chlorinated solvents (PCE, TCE, and carbon tetrachloride). All of the chlorinated solvent contaminants at OU2 have specific gravities greater than 1.0 (i.e., heavier than water). Liquids with this property are referred to as Dense Non-Aqueous Phase Liquids or DNAPLs. These substances have very low solubilities in water, on the order of 100 to 1,100 mg/l (parts per million). For this reason, classical remedial actions like ground-water extraction and aboveground treatment will not remediate the site in a timely manner. Pump and treat technologies require that the source material first dissolve into the ground water. For example, removal of a 55-gallon solvent spill in this manner would require pumping approximately 45,000,000 gallons of ground water with an average concentration of 2 mg/l. Furthermore, the water bearing formations at OU2 are not expected to yield large volumes of water due to their low permeabilities. Therefore, technologies that have the potential to directly remove the source material were considered desirable.

Finally, the review process involved examining technologies with respect to their risk of spreading VOC and radionuclide contamination. This is particularly important at OU2 due to the potential mobilization of radionuclides that may be present at the test sites, specifically uranium, plutonium, and americium. Radionuclide mobility in the aquifer is sensitive to fluctuations in temperature and pH. Candidate remedial technologies were eliminated from further consideration if they posed any unknown risk of uncontrolled mobilization of radionuclides or VOCs.

Candidate in situ remedial technologies considered for the Subsurface IM/IRA included:

- Dehalogenation.
- Chemical oxidation.
- Steam stripping.
- Bioremediation.
- Vacuum-enhanced vapor extraction.

In situ dehalogenation involves introducing an aqueous dehalogenating solution such as sodium borohydrite solution or zinc and acetic acid into the affected portion of the aquifer. Dehalogenating solutions are reductants that liberate nascent (atomic) hydrogen, which replaces chlorine atoms on the solvent molecules, significantly reducing their toxicity. However, there are process uncertainties with respect to uncontrolled mobilization of radionuclides that may be present in the subsurface. The dehalogenation solutionsmay, for example, lower the pH of the ground water or degrade subsurface humic materials, potentially increasing radionuclide mobility. Bench-scale treatability studies will be performed to resolve this uncertainty prior to consideration of the technology for field implementation.

In situ chemical oxidation involves introducing an aqueous oxidizing solution such as a combination of metallic iron and hydrogen peroxide (i.e., Fenton's reagent) into the affected portion of the aquifer. The oxidizing agent (hydroxyl radical in the case of Fenton's reagent) reacts with the VOCs to mineralize them to carbon dioxide and water. Preliminary results of bench-scale testing of chemical oxidation for the 881 Hillside ultra-violet (UV) peroxide/oxidation treatment system have indicated successful destruction of VOCs containing carbon-carbon double bonds (i.e., TCE, PCE, etc.). The results have suggested poor destruction efficiencies for VOCs not containing the reactive carbon-carbon double bonds (i.e, carbon tetrachloride, 1,1,1-TCA, etc.). Also, as discussed above for in situ dehalogenation, there are uncertainties associated with chemical oxidation with respect to uncontrolled mobilization of radionuclides. Therefore, treatability studies examining chemical oxidation will be conducted in the laboratory prior to consideration of the technology for field implementation.

In situ bioremediation utilizes naturally occurring or cultured microorganisms to degrade VOCs. Nutrients and co-metabolites are injected into the subsurface to augment and sustain the microbe populations. Bioremediation has successfully treated many non-halogenated hydrocarbons, but has been less successful with halogenated compounds. Nonetheless, recent progress in bioremediation research indicates that this technology holds promise for the degradation of halogenated organic compounds. At this time, however, inclusion of bioremediation investigations in the Subsurface IM/IRA at OU2 is premature. Iffuture research progress indicates that bioremediation is a practical alternative for degradation of free-phase chlorinated solvents, this technology will be tested to examine its applicability for OU2.

In situ steam stripping includes injection of pressurized steam to displace ground water and vaporize free-phase VOCs trapped in the aquifer and vadose zone soils. Subsurface temperature increases associated with the injected steam, along with a reduction in subsurface pH, may be effective in solubilizing radionuclides adsorbed to the subsurface matrix. Recovery wells are used to collect dissolved, free-phase and/or vapor-phase VOCs and dissolved radionuclides. Condensation of steam and VOCs occurs at the steam front, which expands vertically and laterally over time. The orientation of the steam front is critical to prevent the downward migration of condensed freephase VOCs. However, uncertainties associated with maintaining the steam front at the proper angle and the effectiveness of radionuclide desorption and solubilization require that in situ steam stripping be first examined on a bench scale prior to field testing. Treatability studies examining this technology are currently being conducted by Lawrence Livermore National Laboratory (LLNL) in Livermore, California. Because in situ steam stripping has the potential to recover both VOCs and radionuclides, and this technology is currently being investigated by DOE, it is being considered for further investigation as part of this Subsurface IM/IRA. An additional project phase may, therefore, be added to the Subsurface IM/IRA to conduct an in situ steam stripping pilot test after the results of LLNL study are assessed.

In situ vacuum-enhanced vapor extraction involves the installation of one or more vapor extraction wells within or adjacent to an area containing residual free-phase hydrocarbons. The wells are manifolded into a vacuum pump and the vacuum induced in the subsurface creates a sweep of air through the formation. The induced air flow volatilizes and removes the residual freephase solvents. Separate wells may also be used to inject ambient or heated air into the formation to increase airflow through the contaminated area. In order to address residual contamination held in the aquifer material, the water table must be lowered by pumping to expose the residual

DNAPL to the air flow induced in the formation. In situ vacuum-enhanced vapor extraction coupled with water table depression satisfies the three criteria listed above and has been selected for the Subsurface IM/IRA at OU2. It will provide data that will be useful in the selection and design of a final action as it is potentially applicable at all OU2 solvent spill or burial sites. It addresses the source of the dissolved-phase groundwater plume and reduces the likelihood of additional contaminants migrating from the vadose to the saturated zone. This technology does not involve subsurface injection of liquid reagents, so there is little probability of spreading the VOC contamination. In addition, mobilization of radionuclides that may be present is not expected because no change in ground-water pH is expected.

Actions involving in situ vacuum-enhanced vapor extraction are proposed at three locations within OU2: IHSS No. 112, a former drum storage site at the 903 Pad Area; IHSS No. 113, a former drum storage site at the Mound Area; and IHSS No. 111.1, a burial trench at the East Trenches Area. The locations of these IHSSs are shown on Figure 2-2. Vapor extraction technology can be universally applied at all proposed test locations given adequate formation permeability to air and a known residual DNAPL location. However, application of this technology will be customized to the site-specific hydrogeologic and contaminant distribution conditions. Water table depression efforts will be applied only at those sites where a significant saturated thickness exists (>3 feet). Additional differences in vapor extraction technology application at the three test sites will include site-specific extraction and air injection well placement and design. Site-specific considerations are discussed in Sections 4.3 through 4.5.

4.2 EVALUATION OF PROPOSED ACTIONS

This section discusses the elements of an integrated CERCLA/NEPA evaluation process that will be used to critically examine the proposed actions at the 903 Pad, Mound, and East Trenches Areas. This integrated process is based on both CERCLA and NEPA evaluation criteria as set forth in the March 1990 NCP and the draft DOE NEPA Compliance Guidance Manual (DOE, 1988a as revised), respectively.

An integrated CERCLA/NEPA evaluation process is used in DOE remedial action planning to critically evaluate alternative remedies so that a preferred alternative may be selected. In this case, however, only one action alternative, in situ vacuum-enhanced vapor extraction, has been proposed for implementation at this time (see Section 4.1). Nonetheless, analysis of the proposed in situ vapor extraction actions with respect to CERCLA and NEPA evaluation criteria provides a more thorough understanding of the actions. CERCLA evaluation criteria considered in the analysis include effectiveness and implementability. Analysis of relative cost is used in the CERCLA evaluation process to choose between one or more similarly effective and implementable remedial alternatives. Cost analysis, therefore, need not be included in the evaluation process for the Subsurface IM/IRA. NEPA evaluation criteria considered in the analysis include impacts of the proposed remedial actions to human health and the environment. In order to integrate the requirements of NEPA into the evaluation process, two elements are included:

- CERCLA and NEPA criteria are given equal weighing in the evaluation process.

- Assessment of the environmental impacts of the No Action Alternative is included in the evaluation process.

4.2.1 Effectiveness

The criteria for effectiveness evaluation of the proposed subsurface IRAs include the use of alternatives to land disposal, thus promoting treatment or recycling; risk of potential exposure to residuals remaining on site; continued reliability over the life of the IM/IRA; and compliance with ARARs criteria, advisories, and guidance. In addition, the proposed actions will be evaluated with respect to reduction of toxicity, mobility, and volume of wastes per the March 1990 NCP.

Effectiveness evaluation of the proposed subsurface IRAs does not include several of the CERCLA effectiveness criteria due to the nature of the IM/IRA. These criteria include threat reduction and length of time until protection is achieved. These criteria are not applicable to the Subsurface IM/IRA since subsurface VOC contamination at OU2 does not pose a threat to public health or the environment nor is the proposed action in its current form expected to substantially alter the existing dissolved-phase ground-water plume during the duration of the test. The Subsurface IM/IRA is designed to remove contaminants from small areas at three of the suspected source areas at OU2 and to evaluate a remedial technology that may ultimately be applied on a large scale as part of the final action. Therefore, statements regarding mitigation of identified threats or length of time until protection is achieved are not applicable.

CERCLA effectiveness and NEPA environmental impact criteria both address worker and community protection. In order to avoid repetition in this document, worker and community protection issues associated with the proposed actions will be presented only once in the environmental impact analysis sections.

4.2.2 Implementability

The criteria for implementability evaluation of proposed actionsinclude technical feasibility, availability, and administrative feasibility. Technical feasibility includes the ability to: construct the technology; maintain its operation; meet process efficiencies or performance goals; demonstrate performance; and comply with the Superfund Amendments and Reauthorization Act (SARA) requirement that IM/IRAs should contribute to the efficient performance of a long-term remedial action to the extent practicable. Availability includes the availability of necessary equipment, materials and personnel; availability of adequate off-site treatment, storage, and disposal capacity, if appropriate; and description of post-remedial site controls that will be required at the completion of the action. Administrative feasibility includes the likelihood of public acceptance of the proposed action, including site and local concern; coordination of activities with other agencies; and ability to obtain any necessary approvals or permits.

4.2.3 Environmental Impacts

The criteria for environmental evaluation of the IM/IRA actions include DOE NEPA compliance guidelines for: terrestrial and aquatic impacts, threatened and endangered species, historical and archeological sites, wetlands and floodplains, and cumulative impacts; and air quality, water quality, short- and long-term land productivity, personnel exposures, commitment of resources, and transportation impacts.

The procedural guidance for compliance with NEPA and various related environmental statutes for the proposed action in this Subsurface IM/IRAP/EA is found in the Draft DOE NEPA Compliance Guide (DOE, 1988a as revised). Coordination of NEPA compliance procedures with review requirements of other environmental statutes that bear on the NEPA process enhances the

probability of complete compliance and achievement of timely implementation of programs and projects. The Compliance Guide is intended to assist DOE and contractors by providing the following information on the NEPA process: the processes of related environmental statutes that bear on the NEPA process; the timing relationships between EPA review and review requirements of other environmental statutes; and the NEPA process compliance and development for programs and projects. Regulatory guidance procedures for environmental restoration projects as they relate to air quality, water quality, terrestrial and aquatic impacts, threatened and endangered species, and historic and archaeological sites are discussed in Sections 4.2.3.1 through 4.2.3.5. Short- and longterm land productivity, personnel exposures, commitment of resources, transportation impacts, wetland and floodplain impact assessment, and cumulative impacts are discussed in Sections 4.2.3.6 through 4.2.3.11.

4.2.3.1 Air Quality

Air quality impacts are addressed by estimating changes in ambient air quality due to the No Action Alternative and the Subsurface IM/IRAs. Changes in air quality could result from possible emissions of VOCs (Subsurface IM/IRAs) and generation of fugitive dust (Subsurface IM/IRAs). VOC air emissions from the No Action Alternative are not expected to be significant relative to other VOC air emissions from the RFP that are regulated by CDH since, under the No Action Alternative, VOCs will primarily remain in the subsurface and continue to leach into ground water.

Air quality impacts from VOCs released during vapor extraction system installation activities (e.g., drilling, well installation, and vapor extraction system component setup) would be minimal when compared to the normal operational activity at the RFP even though VOC concentrations in soils in the vicinity of 903 Pad, Mound, and East Trenches are significant. This is because the limited amount of drilling planned for each of the three IM/IRA sites is expected to minimize the generation of VOC-containing drill cuttings. Thus, there will be an insignificant release of VOCs to the air from drill cuttings that amount to less than 2 cubic yards per site. However, in the event that releases are greater than expected, they will be controlled by adherence to the procedures set forth in the Project-Specific Health and Safety Plan (PSHSP) and the Plan for Prevention of Contaminant Dispersion. (See "Personal Exposures" section below.)

The PSHSP will require employees to wear personal protection equipment (PPE) including respirators, gloves, and protective clothing during work tasks where contaminant releases are likely. This will prevent employee exposure in the event of an unplanned release. Employees who are unprotected at the time of an unexpected release will be alerted to take immediate evasive/protective action by warning alarms on direct reading analytical equipment.

If routine air monitoring of dust emissions from planned activities reveals higher than expected dust concentrations, the implementation of dust control techniques described in the PPCD will be initiated. These techniques may include such measures as soil wetting with water or a watersurfactant mixture, windscreen deployment, a change in drilling techniques, application of surfactants to unpaved roads, restrictions on vehicular traffic, temporary stoppage of project operations due to high winds, etc. The PPCD describes a staged approach to preventive measures assessment.

The vapor extraction system includes an offgas treatment unit for removal of contaminants from the vapor stream prior to discharge to the atmosphere. The system includes GAC adsorption units to remove VOCs and in-line high efficiency air particulate (HEPA) filters to capture any radionuclides that

may be released from the subsurface. HEPA filters will be followed by a radiation sensor that will shut the system down before the release of major amounts of radionuclides to the GAC units can occur. Although vapor-phase GAC adsorption is not intended for removal of particulates, filtration of 20 to 50 microns and larger in size is provided by the granular packed bed. Thus, in the unlikely event that the upstream HEPA filters are not properly functioning, the GAC units would provide some filtration capacity.

Dermal exposure, inhalation, and inadvertent ingestion of airborne radioactivity and VOCs on fugitive dusts are analyzed in later sections of this report entitled "Personnel Exposure-Routine Operation." Pollution from engine emissions, fugitive dust generation by vehicles and particulates from tire wear will be analyzed separately in "Transportation Impacts."

With respect to dewatering activities any subsurface water collected would be processed through existing RFP treatment systems. If free-phase VOCs are recovered during dewatering, a closed phase separator system (described in Section 4.3.2) will be added to the vapor extraction system. Therefore, no change in the levels of VOCs in the ambient air off site is expected. The mixing of chemicals for water treatment and use of strong acids or bases in cleaning operations may contribute to odors within the confines of existing water treatment facilities and will be controlled by adequate ventilation. These odors would not be noticeable from outside the treatment facilities, nor would they be a hazard to workers in the facility under normal circumstances. Spills of chemicals that might be involved in accident conditions will be administratively controlled by actions specified in the Operational Safety Analysis (OSA). Considering the above factors, air quality impacts are not further discussed except under personnel exposures and transportation impacts.

4.2.3.2 Water Quality

As discussed in Section 2.3.5, the water quality data for the 26 surface water and surface seep stations in OU2 suggest that VOC contamination atthese stations is a result, at least in part, from soil and subsurface contamination at the 903 Pad, Mound, and East Trenches. The proposed vapor extraction system will remove VOCs from the subsurface and may, over an extended period of time, eliminate enough source material to reduce VOC contaminants in the OU2 seeps, ponds, and creeks.

With respect to the Subsurface IM/IRA, potential impacts to water quality may also arise from surface water runoff from disturbed ground surfaces resulting in sediment transport to the surface waters in both South Walnut Creek and Woman Creek drainage basins. However, erosion control measures, as defined in the construction specifications, would prevent any contaminated runoff from entering surface waters. Techniques may include, but not be limited to: fiber compost nets; grouted riprock; hydromulching and seeding; erosion bales to prevent runon; and benches, berms, and silt fences to control runoff. The area impacted by the construction would be restored immediately upon completion of the project.

Soils within OU2 are contaminated with plutonium, uranium, americium (Rockwell International, 1989a). During drilling and vapor extraction system installation, surveys would be performed to detect any radioactive contamination. Significant radioactive contamination would be handled in accordance with the PSHSP procedures.

With respect to water treatment, spills of subsurface water, chemicals, or treatment media associated with operation and maintenance of the vapor extraction system will be mitigated by use of secondary containment, which would likely capture all of the spilled material. Spills of liquids

resulting from accidents will be controlled by actions specified in the OSA. Transport of secondary wastes will be in accordance with standard Plant and project-specific operating procedures and presents a negligible hazard to on -site or off-site water quality. Considering the above factors, water qualityimpacts are not further discussed.

4.2.3.3 Terrestrial and Aquatic Impacts

Regulations which require federal agencies to assess project impacts on terrestrial and aquatic biota include: NEPA of 1969, the Fish and Wildlife Coordination Act (FWCA) (16 U.S.C. 661-666c), the ESA of 1973 (Public Law 93 -0205), the CWA as amended, and the Migratory Bird Treaty Act (16 U.S.C. 1701-1711) and DOE Order 5400.5. Related guidance includes: DOE, 1988, Environmental Guidance Program Reference Book; ESA and the FWCA, U.S. DOE, Washington, D.C.

Terrestrial populations that may be negatively impacted by drilling and excavation within OU2 for subsurface remediation include: vegetation, ground-dwelling rodents, reptiles, and invertebrates. However, none of these terrestrial populations are threatened or endangered, and they can be expected to quickly re-establish their populations in the disturbed area. Furthermore, areas of impact will be minimal (less than 50 feet by 50 feet) and any loss of vegetation could be offset somewhat by reseeding disturbed areas with native grass and shrub species. Therefore, impacts to terrestrial ecosystems from subsurface remediation will not be further discussed in subsequent sections.

The nearest point of aquatic life that may be affected by the collection, treatment, and discharge of subsurface contaminated ground water is South Walnut Creek. The quality of effluent discharges and the effects on aquatic biota are evaluated and discussed in the Surface Water IM/IRAP for South Walnut Creek (EG&G, 1991e).

4.2.3.4 Threatened and Endangered Species

Representative laws and regulations which protect threatened and endangered species include: the NEPA of 1969, the ESA of 1973, the CWA as amended, and the Migratory Bird Treaty Act. Federal agencies must ensure that actions authorized, funded, or carried out by them will not jeopardize the continued existence of any endangered or threatened species (EG&G, 1991g). Section 7(a)(2) of the ESA requires federal agencies "in consultation with and with the assistance of the Secretaries of the Interior and Commerce, to ensure that their actions are not likely to jeopardize the continued existence of any endangered or threatened species or result in the destruction or adverse modification of the critical habitat of such species...." The statutory authority is listed as follows: Section 7 of the ESA of 1973 (16 U.S.C. 1536), P.L. 93205, December 28, 1973; as amended by P.L. 95-632, P.L. 96-159, and P.L. 97-304. Authority to conduct consultations has been delegated by the Secretary of the Interior to the Director of the USFWS who has authority over endangered or threatened species and their critical habitats as listed in 50 CFR 17.

Related guidance implementation includes the following:

- 50 CFR Part 17 - Endangered and Threatened Wildlife and Plants (includes critical habitats).

- 50 CFR Part 225 - Federal/State Cooperation in the Conservation of Endangered and Threatened Species.

- 50 CFR Part 402 - Interagency Cooperation.

- Environmental Guidance Program Reference Book. U.S. Department of Energy, 1988.

- Endangered Species Act, and the Fish and Wildlife Coordination Act, U.S. DOE, Washington, D.C.

The drilling and excavation for subsurface IRA in OU2 will not affect potential habitat suited for threatened and endangered species. Although there are three endangered species of interest in the RFP area, there is no critical habitat present for these species in the OU2 area. The three endangered species of interest in the RFP area are the black-footed ferret (Mustele nigripes) (USFWS, 1988), the peregrine falcon (Falco peregrinus), and the bald eagle (Haliaeetus leucociphalus) (EG&G, 1991g).

Prairie dog colonies in the northeast area of the plant site provide the potential food source and habitat for the black-footed ferrets. However, no prairie dog towns exist in or near the OU2 area so black-footed ferrets are likely not to exist in this area (DOE, 1990a).

Peregrine falcons were not observed during the reconnaissance-level surveys for the threatened and endangered species evaluation (EG&G, 1991g), although two historic nest sites are located within 10 miles of the RFP site. The Peregrine Falcon Recovery Plan (USFWS, 1984) discourages land-use practices that would adversely alter the character of their hunting habitat or prey base within a 10-mile radius of a nest cliff (including historical sites). Because peregrine falcons prey exclusively on waterfowl and other birds, drilling extraction and or injection wells in OU2 and installation of wells in OU2 will not affect the hunting habitat or the prey base for the peregrine falcon.

Although bald eagles (Haliaeetus leucocephalus) are identified as occasionally using habitat between 0.3 and 1.1 miles from the RFP site during the winter months, sightings are rare and little suitable habitat occurs. No bald eagle nests occur on plant site (DOE, 1990a).

Based on the above discussion, further consideration of impacts to threatened and endangered species for OU2 IM/IRA is not warranted and is not included in subsequent sections.

4.2.3.5 Cultural Resource

NEPA (1969) and the National Historic Preservation of 1966 (Public Law 89-665), together with subsequent law amendments (Public Laws 91-243, 93-54, 94-422, 94-458), provide that all federal agencies implement programs for the protection of historical and archeological resources. Section 106 of the National Historic Preservation Act requires federal agencies to consider the effects of the proposed actions on properties eligible for or listed on the National Register of Historic Places. Section 110(f) of the National Historic Preservation Act requires specifications in federal agency's actions to minimize harm and adverse effects to National Historic Landmarks. Regulatory guidance procedures include the following:

- 36 CFR 800 - Protection of Historic and Cultural Properties (51 FR 31118-31125, September 2, 1986).

- Environmental Guidance Program Reference Book. Historic Preservation Requirements. U.S. Department of Energy, 1987. U.S. DOE, Washington, D.C.

- Guidelines for Federal Agency Responsibilities under Section 110 of

the National Historic Preservation Act (53 FR 4727-4746, February 17, 1988). National Park Service.

- National Register of Historic Places (published by the National Park Service at various times in the Federal Register) (reference to these listings is in DOE. 1987).

- Advisory Council on Historic Preservation, 1986. Section 1206, Step-by-step.

- National Register Bulletins issues periodically by the National Park Service.

Compliance with Section 106 requires federal agencies to identify and evaluate historic properties. The RSO (DOE Order 5440.1c) and the State Historic Preservation Officer locate and evaluate the eligibility of possible historic properties for the National Register of Historic Places. A cultural resource study of the RFP was conducted between 31 May and 28 June 1991 that identified 45 cultural resources, none of which were recommended as eligible for listing on the National Register of Historic Places (EG&G, 1991a). In addition to the 45 sites located during the 1991 survey, six previously identified historic sites were also previously determined to not be eligible for listing on the National Register for Historic Places. They were not re-evaluated during this site-wide archeological survey. The State Office of Archeology and Historic Preservation has determined that any action in the vicinity of OU2 will not impact cultural resources (Burney, 1989). Therefore, further discussion of historic and archeological sites is not included in subsequent sections.

4.2.3.6 Short- and Long-Term Land Productivity

Land within OU2 is currently undeveloped and will remain so for the foreseeable future as part of the Rocky Flats Plant. OU2 lies within the Rocky Flats security boundaries and is not accessible to the general public. Short- and long-term land productivity will not be altered by the project and, therefore, is not discussed.

4.2.3.7 Personnel Exposures

DOE NEPA documentation includes analysis of potentially significant occupational impacts to workers and the public. This analysis includes radiological and nonradiological impacts under routine and accident conditions. Analysis of accidents includes potential impacts to workers as a result of an accident, and potential impacts associated with clean-up activities.

When analyzing occupational impacts, credit was taken for worker protection provided by the Environmental Restoration Health and Safety Program Plan (ERHSPP). The ERHSPP addresses the minimum health and safety requirements for outside contractors as dictated by the EM Department and the Health and Safety (HS) Department. The ERHSPP outlines the requirements for a PSHSP that identifies construction tasks, potential hazards and the steps to control hazards. The PSHSP would be prepared in accordance with guidelines set forth in the ERHSPP, and the Plan for Prevention of Contaminant Dispersion (PPCD) (EG&G, 1991d), and would be completed after the IM/IRA design is finalized. The PSHSP must be approved by the EM and HS Departments, and will be reviewed by EPA and CDH. Worker protection is also addressed by the OSA which is completed during preparation of the PSHSP. The OSA addresses health and safety concerns originating from routine site operations.

Drilling Activities

Potential personnel exposures during drilling/vapor extraction system installation activities would result from several pathways:

- Dermal and airborne exposure to VOCs or radioactive materials from subsurface water and drilling fluids.

- Airborne exposure to radionuclides and VOCs while drilling the wells.

There would be limited potential for dermal contact with contaminated soil and fluids considering the small amount of soil cuttings generated (~ 2 yd[3]). Also, the PSHSP would specify the appropriate levels of personnel protection (e.g., respirators, gloves, goggles, protective clothing) to protect against inhalation and direct contact with contaminants. Considering the personnel protection and limited potential for dermal exposure, and that dermal contact is a minor exposure route for the identified contaminants, potential impact to workers would be negligible. Airborne exposure of workers and the public to radionuclides and VOCs will be prevented through the PPCD and the PSHSP. Access controls to the plant site and drilling areas would preclude dermal contact as a credible exposure route for other site personnel and the public.

Routine Operations

Potential exposure routes for remediation workers, other on-site personnel, and members of the general public during routine operations include:

- ù Airborne exposure to VOC vapors from the subsurface water collection system sumps, the tank truck, the process influent tank, and from the water treatment process equipment.

- Dermal contact with contaminants while performing operations and maintenance activities.

- Fugitive dust generated in the wake of vehicles traveling to the water collection stations for maintenance and surveillance activities.

Subsurface IM/IRA operations and maintenance activities would be performed in accordance with OSA procedures, which specify appropriate levels of monitoring and personnel worker exposure protection. Considering the unconfined nature of the work areas and administrative controls, potential worker exposures to airborne VOCs would be very low. Airborne VOC concentrations and resulting exposures to other on-site personnel and the general public would be significantly less because of their greater distance from the source. The potential for chronic exposure of workers to VOCs resulting from operational tasks associated with the GAC adsorption system would be small, considering replacement of GAC units does not involve contact with spent carbon, and OSA procedures will be in place to protect workers from potential hazards.

Personnel protective measures may be necessary during some routine operational activities where there is a potential for worker contact with contaminated water. Appropriate measures would be followed as specified in the OSA for those activities. Access controls would preclude dermal exposure as a credible pathway for other on-site personnel and the general public.

Occasional travel to the subsurface water collection stations will be required for maintenance and surveillance purposes. While some fugitive dust may be generated in the wake of vehicles, it is not expected to be a

significant exposure pathway for the vehicle operator, other on-site personnel, or the general public because of the short travel distance on unpaved roads and the anticipated low frequency of travel to the collection stations.

Any accidents that may occur during the installation phase of the proposed action would be typical of drilling activities. The PSHSP will identify appropriate precautions and responsibilities for each job. The PSHSP will also specify appropriate air monitoring and response procedures in the event of an unusual VOC or radionuclide release. Workers will be familiar with the PSHSP and a copy of it will be available at the work site.

During operations, accidents that could impact either workers or members of the public would include fires or major spills of contaminated material. Potential releases of untreated water along the truck route or proposed pipeline or within the existing treatment facilities would create the potential or short duration airborne VOCs. Intake of contaminants by workers involved in the cleanup would be controlled by following safety precautions specified in the OSA.

This section on personnel exposures applies to all three proposed actions. Therefore, further discussion of personnel exposure is not included in subsequent sections.

4.2.3.8 Commitment of Resources

Commitment of Resources is evaluated by examining the economic and ecological value of materials (and labor) required for the IM/IRA preferred actions. The resources (including both material and labor) required for construction and operation of this Subsurface IM/IRA are relatively minor. No significant commitment of economically or ecologically valuable resources is involved. With the exception of the land area, all the materials for construction and operation of the surface water treatment system will be irrevocably and irretrievably committed to the implementation of remedial action. The facilities proposed for treatment of the Subsurface IM/IRA-generated water utilize preexisting process equipment and do not require additional purchase and installation of treatment facilities for the IM/IRA.

4.2.3.9 Transportation Impacts

Human health impacts due to transportation include latent effects associated with vehicle pollution, in addition to traumatic injuries and fatalities resulting from accidents. Normal transportation is associated with incremental pollution from engine emissions, fugitive dust generation in the vehicle's wake, and particulates from tire wear. The table below presents estimates of risks (Rao et al., 1982) resulting from truck and rail transportation. Uncertainties are associated with pollution emission rates and atmospheric dispersion behavior. To compensate for these uncertainties, the analysis utilized conservative estimates for determining pollution health effects. The tabulated accident impacts are average values over population zones (urban, suburban, rural) and are derived from Department of Transportation (DOT) nationwide statistics.

Drilling fluids and cuttings are to be treated as hazardous material and transported in accordance with appropriate DOT regulations and DOE orders. Transport and handling of other hazardous materials will also be in accordance with appropriate regulations and orders and the On-Site Transportation Manual (DOE, 1991c). Emergency response procedures for accidental spills or container failures are described in Section 17 of the On-Site Transportation Manual. Estimation of transportation impacts for the 903 Pad, Mound, and East Trenches Subsurface IM/IRAs is detailed in Appendix

E.

4.2.3.10 Wetlands and Floodplains Impact Assessment

The relevant laws and acts that protect wetlands and floodplains include: NEPA of 1969; Section 401 and 402 of the CWA; the Fish and Wildlife Act of 1956 plus associated coordination acts; and regulations promulgated under 10 CFR Part 1022 - DOE Compliance with Floodplain Wetlands Environmental Review Requirements. The rules promulgated under NEPA 42 U.S.C. 4321, et seq., in 40 CFR parts 1500 through 1508 state that all federal agencies are required to consider the environmental affects of any proposed action (EG&G, 1990d). Since the proposed actions are at least 400 feet away from any wetlands and are not within a floodplain, 10 CFR Part 1022 does not apply.

Executive Orders (E.O.) that require federal agencies to consider the effects of proposed action on wetlands and floodplains are as follows:

- E.O. 11990 Protection of Wetlands (May 24, 1977).
- E.O. 11988 Floodplain Management (May 24, 1977).

These orders require federal agencies to avoid, to the extent possible, destruction and modifications of wetlands, and adverse impacts associated with the occupancy and modification of floodplains. Federal agencies are required to determine if wetlands and floodplains that may be affected by the action are present, assess the impacts on these environments, and consider alternatives to the action. DOE regulations establishing policy and procedures for the RFP site in compliance with E.O. 11990 and 11988 are found in 44 FR 12594 (7 May 1979).

Documentation of a wetlands and/or floodplain review involves: (1) public notification of intent to perform a wetlands/floodplain review; (2) wetlands/floodplain assessment; and (3) a statement of findings for actions involving floodplains.

When an action in a wetlands and/or floodplain requires an EA, the wetlands and/or floodplain assessment will be prepared concurrent with, and is included in, the EA. Wetlands and/or floodplain assessments that are part of the EA are subject to approval by the Assistant Secretary for the Environment, Safety and Health. Actions in wetlands may, but do not necessarily, require an EA (DOE, 1988).

4.2.3.11 Cumulative Impacts

A "cumulative impact" is defined in 40 CFR 1508.7 as "the impact on the environment which results from the incremental impact of the action when added to other past, present, and reasonably foreseeable future actions regardless of what agency (federal or non-federal) or person undertakes such other actions. Cumulative impacts can result from individually minor but collectively significant actions taking place over a period of time." Cumulative impacts will incorporate similar, previous IM/IRA actions in the same geographic location and consider impacts on aquatic and terrestrial biota, and impacts from construction and operations of the proposed action to on-site personnel and the general public (DOE, 1988d). It is noted that air quality and water quality impacts are not cumulative because emissions, discharges, or releases are not expected to occur during routine operations. Impacts resulting from installation activities or operational accidents would be short lived and are, thus, also not cumulative.

4.3 VACUUM-ENHANCED VAPOR EXTRACTION AT 903 PAD (IHSS NO. 112)

This section presents a detailed description of the proposed action at the 903 Pad. This discussion focuses on the rationale and criteria for selecting the test site at the 903 Pad, expected test site conditions, proposed treatment systems, and Observational/Streamlined Approach considerations with respect to deviations in expected test site conditions. The criteria presented below for 903 Pad test site selection were also used to select sites at the Mound and East Trenches Areas (Sections 4.4 and 4.5, respectively).

4.3.1 Test Site Description

4.3.1.1 Test Site Selection Rationale

The criteria listed below were used to guide test site selection. The test area should possess:

- A relatively high probability of containing residual free-phase DNAPL in the vadose and/or saturated zone.
- A low probability of containing buried drums.
- A low probability of containing metallic Pu or U.

The first criterion is related to the proposed remedial technology, in situ vacuum-enhanced vapor extraction. As discussed in Section 4.1, in situ vacuum-enhanced vapor extraction is a VOC source removal technology, requiring the presence of residual free-phase chlorinated solvents in order to demonstrate successful performance. In addition, the test site should not contain buried containers because the proposed actions involve drilling boreholes. Penetration of a buried drum containing waste will likely result in a release of contamination to the subsurface. Lastly, the test site should not contain buried metallic Pu or U as these materials are potentially autopyrophoric and should not be disturbed during drilling or vapor extraction activities.

IHSS No. 112 (see Figure 2-2), a former drum storage location at the 903 Pad, satisfies all three test site selection criteria. With respect to the first criterion, drums stored at IHSS No. 112 between 1958 and 1967 reportedly leaked an estimated 5,000 gallons of fluid onto the ground (Freiberg, 1970). Calkins (1970) reports that fluids stored at the 903 Pad included: lathe coolant consisting of hydrocarbon oils, and carbon tetrachloride in varying proportions; hydraulic oils; vacuum pump oils; TCE; and PCE. Carbon tetrachloride was detected at a 6,400 ug/l in a water sample collected in September 1990 from alluvial monitoring well 1587 which is located downgradient of the 903 Pad (see Figure 2-11). This well is located approximately 300 feet from the suspected spill location, suggesting much higher concentrations at the spillsite. IHSS 112 satisfies the second criterion based on reports indicating that drums were not buried at this location. All drums were stored on the ground and subsequently removed. Reportedly, the only metallic nuclear material released at the 903 Pad is an estimated 86 grams of finely divided plutonium (Freiberg, 1970) of which a significant portion was removed during subsequent remedial efforts. A study conducted by Clark (1991) concluded that plutonium in the 903 Pad soil is inert with respect to pyrophoricity (Clark, 1991).

The specific location of the fluids released at 903 Pad was determined by review of aerial photographs which reveal the former location of storage drums and areas of stained soils (Figure 4-1). The proposed action will be conducted in an area of stained soils in the north-central portion of IHSS No. 112.

4.3.1.2 Expected Conditions

Site-specific geologic, hydrologic, and contaminant type and distribution information local to the proposed 903 Pad test site is not currently available. Therefore, an idealized conceptual hydrogeologic and contaminant distribution model has been developed based on information derived from geologic logs, water level data, and ground-water chemistry from investigative activities conducted near the proposed test site. The site-specific conceptual model was further refined using the geologic log of the borehole drilled for monitoring well 1687 located approximately 300 feet east of the 903 Pad. This log is representative of the 903 Pad Area and is presented in Appendix D. The idealized conceptual model of the 903 Pad pilot test site is illustrated in Figure 4-2. The diagram illustrates the hydrogeology and contaminant distribution expected to exist within 50 feet of the ground surface.

Sand and gravel alluvium extends to approximately 18 feet below ground surface. It is expected that the alluvium contains unconfined ground water perched on bedrock with a saturated thickness of approximately 4 feet. Furthermore, the saturated thickness will likely vary seasonally. The alluvium overlies claystone bedrock which may contain isolated or interconnected fractures. The claystone bedrock is not expected to contain recoverable ground water.

It is expected that carbon tetrachloride comprises the majority of the released hazardous contaminants with lesser amounts of TCE and PCE. As discussed in Section 4.1, these contaminants have limited solubility in water and have a specific gravity greater than 1.0 (i.e., DNAPL). The conceptual model thus indicates the vertical migration of these DNAPLs through the vadose zone and the saturated alluvium coming to rest in structural depressions on the claystone bedrock surface. Infiltration of DNAPL along bedrock fractures is also shown. A review of existing monitoring well design and ground-water chemistry (Rockwell, 1987a) with respect to the presence of dissolved versus residual free-phase chlorinated solvents in the claystone bedrock near the 903 Pad was inconclusive. It is important to note that the presence of pools of DNAPL perched on the bedrock is also uncertain and may never be conclusively determined. However, the presence of a dissolved carbon tetrachloride plume coupled with the presence of stained surface soils and an estimated release of 5,000 gallons of fluids suggests the

presence of residual free-phase chlorinated solvents in the vadose and saturated zones which would constitute a continuing source for the dissolvedphase contaminant plume.

4.3.2 Remedial Approach

4.3.2.1 Proposed Action Based on Expected Conditions

This section provides a detailed description of the interimremedial action proposed for implementation at the 903 Pad test site. The proposed action is based on the idealized conceptual hydrogeologic and contaminant distribution model described in Section 4.3.1.2, and involves:

- In situ vacuum-enhanced vapor extraction coupled with ground-water depression for the alluvial material.

- In situ vacuum-enhanced vapor extraction for the upper portion of the claystone bedrock.

A second site may also be selected at the 903 Pad to conduct tests of in

situ steam stripping for removal of both VOC and radionuclide contamination. Further consideration of this technology is deferred pending completion of treatability studies being conducted by LLNL. The reader is referred to Section 4.1 for additional explanation of in situ steam stripping.

This section first discusses the elements of the vapor and groundwater extraction system followed by a description of the proposed vapor and ground-water treatment systems.

Vapor and Ground-Water Extraction

Figure 4-3 illustrates the location and configuration of the vapor and ground-water recovery wells to be installed at the 903 Pad. Two alluvial vapor extraction wells will be installed in an area of stained soils in the north central portion of IHSS No. 112 (Figure 4-1). The existing asphalt cap on 903 Pad is expected to prevent short circuiting of air flow from the atmosphere to the extraction wells. Ground water will be extracted from the alluvium using pumps installed

in the vapor extraction wells. An air-tight seal will be installed at the top of the well casing to allow the extraction of both vapor and ground water. A schematic diagram showing pump placement and casing cap ispresented in Figure 4-4. Between these two wells, one air injection well will be installed in the alluvium. This well will be used to depress the water table and increase the volume of soils contacted by injecting ambient air. This will be accomplished by connecting an air injection manifold to the well and also installing a submersible pump. The pump riser pipe and air injection manifold will exit the well casing via an airtight seal. Ambient and heated air will also be injected during the test to determine if the additional air flow and heat increases the rate of volatilization of residual DNAPL. Ambient and heated air will be injected at a rate equal to one-half of the combined extraction rate. This is to ensure that injected air does not further disperse vapor phase contaminants in the vadose zone. Under ideal conditions of isotropy and homogeneity of the alluvial soils or bedrock, air flow lines can be expected to form a closed loop between the injection and extraction wells given reasonably close well spacing (<25 feet). Radial pressure distribution equations (Johnson et. al, 1989) will be used during Test Plan development to insure that negative pressures are maintained at the boundary of the test area.

Remedial efforts in the alluvium and bedrock will be isolated from each other in order to prevent cross-contamination. Preventative measures include installing separate wells in the alluvium and bedrock. Bedrock wells will be isolated from the alluvium by the installation of a steel surface casing. Well construction schematics are presented in Figure 4-5. Note that alluvial groundwater extraction wells will have screened sections that penetrate several feet into the bedrock. This is to allow for the collection and recovery of free-phase or "flowing" DNAPL should it be encountered at the alluvial/bedrock interface.

The results of the in situ pilot tests will be evaluated to assess the benefit of post-pilot operation of the vapor extraction system at each of the IM/IRA test sites. The objective of post-pilot system operation is to recover significant amounts of VOCs from the test areas. Pilot test data will be evaluated with respect to the following criteria:

- Mass of VOCs recovered per unit cost.
- Mass of VOCs recovered per unit time.
- Areal influence of vapor extraction system.

- Ability to successfully control the mobility of contaminants.
- Ability to successfully dewater aquifer material (if present).

These criteria will be used to evaluate the pilot test data within the context of the limitations imposed by test site geology and contaminant distribution, logistical considerations, and costs relative to alternative residual free-phase VOC-removal technologies (e.g., excavation). As discussed in Section 5, the pilot test data, data analysis, and recommendations for continued system operation at the three test sites will be presented in a Pilot Test Report.

The conceptual hydrogeologic model illustrated in Figure 4-2 shows some limited penetration of DNAPLs into bedrock fractures. To evaluate the potential to recover residual DNAPL (if any), two vapor extraction wells will be installed in the upper portion of the claystone bedrock. One air injection well will be installed between the two extraction wells. All bedrock extraction/injection wells will be installed to a minimum depth of 30 feet into the bedrock. No recoverable ground water is expected in the upper portion of the bedrock.

Dynamic system performance will be evaluated by monitoring vapor recovery rates, contaminant concentrations in recovered vapor and by measuring vacuum induced in the subsurface. Vapor recovery rates will be measured using a dedicated pitot tube installed in the vapor collection manifold. Contaminant concentrations will be measured by sampling recovered vapor with subsequent chemical analyses. Formation pressures will be measured in recovery wells and the injection well prior to injecting air. Dedicated valves between the vapor collection manifold and each vapor extraction well will allow one well to be operated independently while formation pressures are measured in the adjacent well. In addition, two or more temporary vacuum monitoring probes will be placed within the test area to determine the area of influence of the vapor extraction system.

System effectiveness will be evaluated by establishing initial conditions through collection of soil samples during the advancement of boreholes for well installation and subjecting them to laboratory analyses. Upon completion of the IRA, additional soil samples will be collected in the proximity of the original samples. Comparison of contaminant concentrations before and after the test will provide a quantitative evaluation of system effectiveness.

The proposed test site selection was based on qualitative data from the proposed test site and conditions extrapolated from quantitative data collected near the proposed test site. Should the proposed test site prove inadequate, an alternative test site will be selected. The most likely reason for poor site conditions is the absence of residual free-phase DNAPL. A preliminary threshold for determining success will be concentrations of hydrocarbon compounds in the recovered soil vapor equal to 1 part per million (ppm) as measured with a portable photoionization detector calibrated for the major contaminant expected at each test site (i.e., CCl_4 at 903 Pad). This value was selected because it is the lowest concentration which can be reliably detected with basic field instrumentation. The hydrocarbon concentrations will be confirmed by subsequent laboratory analyses. The test will be conducted for a minimum of 7 days before abandonment and new site selection. If the recovered vapor contains hydrocarbon concentrations equal or greater than 1 ppm, the test duration will be determined while the test is in progress. In any case, the test duration should not exceed 3 months.

Therefore, implementation of this technology may be appropriate under the criteria, outlined in the introductory paragraphs of this section, once treatability studies have been successfully completed.

A preliminary review of potential test sites revealed 903 Pad as the most suitable test site. Releases of VOCs are suspected to have occurred at the 903 Pad and finely disseminated radionuclide contamination is known to be present in the soil. However, further evaluation of this technology is deferred pending completion of the treatability studies.

Vapor and Ground-Water Treatment

Vapors extracted from the subsurface at the 903 Pad will be treated for removal of particulates and VOCs prior to discharge to the atmosphere as illustrated in Figure 4-6. The vapor treatment system conceptually illustrated in Figure 4-6 will be newly constructed specifically for the Subsurface IM/IRA. Extracted vapors are first passed through a mist eliminator to remove entrained condensate that may be present. The mist eliminator is packed with stainless steel mesh that provides a large surface area that allows small entrained liquid droplets to coalesce into larger droplets that separate by gravity from the vapor stream. Accumulated liquids are gravity drained from the mist eliminator while the vacuum pump is off. Condensate generated by the treatment system will be placed in the ground-water holding tank for subsequent treatment (discussed below).

The vapor leaving the mist eliminator passes through a vacuum pump provides the driving force for subsurface vapor extraction. The vacuum pump will be specified to provide a range of operational service to accommodatethe different subsurface conditions at each of the OU2 pilot test sites. Lower permeability clay soils at the Mound, for example, will likely require higher vacuum pressure to be applied to the subsurface to induce adequate vapor flow than would be required for the higher permeability soils at the East Trenches Area. Detailed specification of the vacuum pump as well as all other treatment system components will be provided in the Pilot Test Plan which will be prepared after regulatory agency approval of the Subsurface IM/IRAP/EA (Section 5.1).

The vapor exiting the vacuum pump is filtered by a HEPA filtration unit. HEPA filters contain fabric filtration media that is capable of removing particulates as small as 0.3 microns with 99.7 percent efficiency (Federal Standard 209b). In this vapor treatment application, HEPA filtration prevents fouling of downstream process equipment (i.e., vacuum pump and GAC units) and ensures operation within particulate emissions standards (Section 3.2.3). The latter is particularly important if the extracted vapors contain particulates contaminated with radionuclides. Figure 4-6 shows that the vapor treatment process includes two HEPA filters configured in parallel. One of the units is operated in a standby mode, and thus provides redundancy in the event that the on-line filter plugs or otherwise fails. Filter plugging is monitored with the pressure indicators installed on the inlet and outlet of the HEPA filters.

The vacuum pump mentioned above imparts heat to the vapor stream as a result of the work performed on the fluid. The magnitude of increase in vapor temperature depends on many factors including vapor flow rate and pump duty. The vapor stream may have to be cooled to ensure efficient adsorption of VOCs by the GAC units. Optimal adsorption efficiencies are achieved at temperatures less than 80 F. If required, a heat exchanger will be included in the pilot system design to cool the vapor stream. Figure 4-6 illustrates a water-cooled heat exchanger where warm water existing the exchanger is sprayed cooled (i.e., evaporative cooling) in a recirculation tank.

The cooled vapor stream is then processed through two GAC adsorption units for removal of VOCs prior to discharge to the atmosphere. Adsorption of VOCs is a result of a physicochemical attraction between the VOC molecules and the GAC, which provides a very large surface area for adsorption to occur. The concept design includes two GAC units configured in series (i.e., lead and polishing positions). Once the GAC unit in the lead position is fully loaded with VOCs (i.e., spent), it is taken out of service. The polishing GAC unit is moved to the lead position and a new GAC unit is placed in the polishing position. Physical movement of the polishing GAC unit is not necessary to place it in the lead position. This is accomplished by changing the open/closed configuration of the process valves. Spent GAC generated during the pilot study phase of the IM/IRA will be analyzed for the presence of radionuclides to determine whether it may be regenerated or must be managed as a mixed waste. Due to the nature of this remedial action along with the presence of HEPA filtration upstream of the GAC units, it is expected that the GAC will not be contaminated with radionuclides and will be able to be regenerated. Regeneration is typically performed by the manufacturer and involves the passage of hot air through the bed to desorb the VOCs. The desorbed VOCs are then destroyed by high-temperature incineration.

The instrumentation and analytical sampling locations shown on Figure 4-6 conceptually illustrates the process information necessary to properly operate and evaluate the proposed vacuum-enhanced vapor extraction and treatment system. Detailed specification and placement of process instrumentation will be provided in the Pilot Test Plan. However, the following discussion of process measurements that are common to a variety of vapor extraction system configurations will aid in the understanding of process operation. Level measurement on the mist eliminator indicates the amount of condensate that has accumulated and notifies the operator of the need to drain the unit. As mentioned above, pressure measurement before and after the HEPA filters provides an indication of filter plugging.

Based on this differential pressure measurement, the standby filter containing virgin filter media is brought on line. The spent filter is taken off line and its filter media replaced. Similarly, differential pressure measurement across the GAC units provides an indication of unit loading and/or plugging.

Real-time monitoring is often employed for critical parameter measurement, alarm, and control. For the proposed vapor treatment system, online radiation monitoring immediately downstream of the HEPA filters detects failure of the filters to remove radionuclide-contaminated particulates if present in the extracted vapors. Likewise, real-time VOC leak detection is used to monitor the integrity of system piping and connections to ensure emission-free operation. Leaks in process piping located downstream of the vacuum pump (i.e., positive pressure side) and upstream of the GAC units may result in VOC emissions. Leaks on the negative pressure side of the process do not result in undesired emissions. Rather, atmospheric air is pulled into the system. RCRA leak detection is often implemented by monitoring the secondary containment cavity of the process piping. Specifically, a hydrocarbon sensor is placed into the secondary containment cavities of the process piping and connected to an alarm. In addition to these alarms, the signals from the real-time radiation and VOC sensors may be used to provide automatic shutdown of the system. Details of control signal wiring will be presented in the Pilot Test Plans.

Vapor flow measurement and analysis of vapor samples will allow calculation of contaminant mass recovery rates, and thus, evaluation of system performance. Comparison of upstream and downstream vapor flow measurementsprovides additional information for assessment of system vapor

leaks. Measurement of the temperature of the vapor leaving the heat exchanger is crucial in maintaining the operating efficiency of the GAC units.

As mentioned above, pilot testing of the in situ vacuum-enhanced vapor extraction system involves injection of ambient and heated air into the test area formation to study the effect on VOC mass recovery. Figure 47 illustrates the equipment that will be used for air injection: a blower and liquid propane gas-fired heater. This equipment will be sized during the detailed design phase of the IM/IRA (i.e., Test Plan) to provide a range of operational service that accommodates the different subsurface conditions at each of the OU2 test areas. Process

instruments and controls will be used on the air injection system to ensure proper control of air flows and temperatures.

As noted on Figures 4-6 and 4-7, the vapor injection, extraction, and treatment system components are mounted on a flat-bed trailer. This allows the equipment to be easily moved to different vapor extraction test sites. Electric power necessary to operate these systems at the 903 Pad test site will be obtained from existing power lines in the vicinity of 903 Pad. Electric power-driven equipment includes vapor and ground-water extraction pumps, air injection blower, instrumentation and controls, cooling water circulation pump, and heat tracing.

The South Walnut Creek Basin Surface Water Treatment Facility (Section 4.6.1) is proposed for use in treating contaminated ground water and condensate generated by Subsurface IM/IRA pilot test activities at the 903 Pad. This facility has been selected because of the uncertainty associated with the chemistry of the ground water that may be recovered directly beneath the 903 Pad. The South Walnut Creek Basin Surface Water Treatment Facility is the only existing or planned RFP treatment system that has been designed to address all of the potential contaminants of concern. At OU2 these contaminants include VOCs, radionuclides (i.e., Pu, Am, and U), and metals. The 881 Hillside Ground-Water Treatment System, for example, has been designed to remove VOCs, metals, and U, but not Pu or Am. Proposed use of the South Walnut Creek Basin facility to treat contaminated Woman Creek Basin Surface seeps and discharge the treated water to the South Walnut Creek drainage (EG&G, 1990e) encountered strong public opposition with respect to interbasin transfer of this seep water. It should be noted, however, that ground water at the 903 Pad test site flows in two directions: northeast toward the South Walnut Creek Basin, and southeast toward the Woman Creek Basin. This bidirectional flow is a result of the 903 Pad Area being located on a potentiometric crest. Therefore, use of the South Walnut Creek Basin facility to treat any ground water that may be recovered at the 903 Pad IM/IRA test site does not raise the issue of interbasin transfer of contaminated water. The South Walnut Creek Basin Treatment System is centrally located with respect to all of the proposed pilot test locations and has spare processing capacity. It is also proposed that ground water and condensate generated from pilot testing at the 903 Pad be transported to the South Walnut Creek Basin Treatment System by tank truck. Truck transport has been selected over pipeline transport because of the relatively short duration of the pilot study and the uncertainties associated with production of ground water, if any. Ground-water production and chemistry data collected during the pilot study phase of the IM/IRA will allow consideration of the use of other RFP treatment systems for post-pilot study operation. These data will also be used to determine the means of contaminated water transport (tank truck versus pipeline) to the designated treatment facility during post-pilot studyoperation. Candidate RFP water treatment systems that may potentially support the Subsurface IM/IRA are discussed in Section 4.6.

It is estimated that approximately 1 gallon per minute (gpm) of ground water will be produced in dewatering the 903 Pad test area alluvium. The volume of condensate produced will be minimal. Ground water and condensate recovered during pilot testing will be allowed to accumulate in an insulated and heated holding tank located at the test site. The contents of the tank will be transported by tank truck to the South Walnut Creek Basin Treatment Facility for removal of contaminants. Assuming the use of a 5,000-gallon holding tank and a 5,000-gallon tank truck, one trip will be required every 3 days to accommodate a 1 gpm recovery rate. The one-way transportation distance from the 903 Pad test site to the South Walnut Creek Basin treatment facility is less than one-half mile via Central Avenue and the treatment facility access road.

As discussed above, several incidental wastes would be generated during installation and operation of the proposed subsurface action at the 903 Pad. These wastes include: personnel protective equipment, drill cuttings (i.e., contaminated soil from well installation), vapor extraction treatment residuals including spent HEPA filtration media and GAC; ground-water treatment residuals including sludge and GAC; and recovered free-phase solvents (Section 4.3.3.2). All incidental wastes from installation and operation are expected to be similar to those already generated at RFP and will constitute a small fraction of the wastes already processed for storage or disposal by the site. These solid wastes will be characterized and handled according to RFP waste management operating procedures (EG&G, 1991h).

4.3.2.2 Observational/Streamlined Approach Considerations

In accordance with EPA Observational/Streamlined Approach guidance, this section identifies potential deviations from the expected conditions at the903 Pad test site, mechanisms to identify the deviations, and contingency plans that respond to the deviations. Deviations from expected conditions are a result of incorrect assumptions with respect to site-specific hydrogeology and nature of contamination based on limited site characterization data. As mentioned in Section 4.3.1.2, the expected conditions at the 903 Pad are based on qualitative data regarding the site history and quantitative data derived from investigative activities performed near the proposed test site, but not actually within the test area. In light of the uncertainties associated with extrapolation of site conditions from these data, the development of contingencies to respond to unexpected conditions within the test site is a critical component of the IM/IRA.

Table 4-1 presents reasonable deviations that might be encountered during implementation of the proposed vapor extraction system at the 903 Pad test site. The table also indicates the mechanisms that will be used to identify the potential deviations and presents contingency plans that will be implemented in the event that a deviation actually occurs. The remainder of this Section provides a detailed explanation of Table 4-1.

Free-phase solvent contamination at 903 Pad is not expected to have penetrated more than 30 feet into the claystone bedrock. This expected condition is based on a review of existing RI data. The potential deviation would be the presence of free-phase contamination at depths greater than 30 feet into bedrock. The method for detecting the deviation is visual inspection of soil samples recovered during drilling of the bedrock vapor extraction well boreholes. The contingency involves continuing the boring to the lower limit of observed contamination and installing a well screen to the total depth of the boring. However, the boring will not extend beyond 100 feet total depth.

Recoverable ground water in the claystone bedrock at the 903 Padtest site is not expected. Borings advanced through the claystone near the 903 Pad during previous investigative efforts recovered only dry to moist soil samples. It is possible, however, that the vacuum induced by the vapor recovery wells will result in the accumulation of residual soil moisture in the well. This potential deviation from expected conditions will be directly measured using an electronic water level indicator. The contingency will involve retrofitting the vapor recovery wells with ground-water extraction pumps. Ground water extracted during pilot testing will be transported to the South Walnut Creek Basin Treatment System as discussed above.

DNAPLs are not expected to accumulate in the alluvial or bedrock wells. There is, however, uncertainty in this expectation, and it is conceivable that accumulation of DNAPLs in the wells may occur. The bedrock wells, for example, may receive DNAPLs from pools perched on the bedrock. The presence of free-phase liquid contaminants in ground-water extraction wells will be determined by visual inspection of the recovered ground water for an immiscible phase. The contingency to respond to this deviation will involve retrofitting the ground-water storage system with a liquid-phase separation unit installed between the extraction wells and the storage tank.

Although not expected, during vapor extraction system startup it is conceivable that radionuclide-contaminated particulates resulting from disturbed soils along the length of the extraction wells may be entrained into the vapor stream. HEPA filters are included in the vapor treatment process for particulate removal. Filtration protects the GAC against fouling and ensures that radionuclides are not discharged from the system. Spent HEPA filter media will be sampled and analyzed for the presence of radionuclides. If after several weeks of system operation, analysis of spent filtration media establishes that radionuclide-contaminated particles are not present in the vapor stream, HEPA filtration will be removed from the process, allowing a greater vacuum to be pulled on the subsurface. If analysis indicates the presence of radionuclides, however, HEPA filtration will be retained. In either event, realtime radiation monitoring will be conducted.

It is expected that GAC adsorption will provide cost-effective recovery of vapor-phase VOCs. This is strictly a function the VOC mass recovery rate observed during the pilot study. Based on the mass recovery rate, the feasibility of stand-alone GAC adsorption will be compared to condensation and thermal oxidation. Condensation involves chilling the vapor stream to liquify VOCs. The liquid stream is recovered and sent off site for recycling. Residual VOCs in the vapor stream are removed by GAC adsorption. Thermal oxidation involves immediate destruction of VOCs extracted from the subsurface.

4.3.3 Evaluation of Remedial Approach

4.3.3.1 Effectiveness

The proposed subsurface action at the 903 Pad test site provides an alternative to excavation and disposal of VOC-contaminated soils. VOCs recovered by the GAC adsorption units are subsequently thermally desorbed and destroyed at an off-site GAC regeneration facility. During the regeneration process, a small quantity of ash may be generated which requires land disposal. The action is also expected to generate sludge from treatment of contaminated ground water and condensate at the South Walnut Creek Basin Surface Water Treatment Facility. This sludge may require land disposal and/or on-site storage as a hazardous mixed waste. Likewise, spent HEPA filtration media may also require land disposal or on-site storage as a

hazardous mixed waste. However, generation of spent HEPA filtration media is expected to be minimal and only during the initial weeks of operation. Management of treatment systemresiduals according to RFP standard operating procedures will eliminate exposure risks.

Vapor-phase recovery is an efficient method for reducing contaminant mobility and volume. By addressing free-phase source contamination, a reduction in the amount of contaminant available to dissolve into the ground water ultimately results in reduction of the volume of contaminated ground water migrating from the test areas. A reduction in toxicity is also achieved by recovery and destruction of VOCs. Vapor-phase recovery may be implemented using relatively simple, cost effective and reliable equipment. As discussed in Section 3, there are no ARARs for remediation of subsurface soils. ARARs do exist, however, for treatment and discharge of any ground water recovered during the IRA. Proposed use of the South Walnut Creek Basin Surface Water Treatment Facility (EG&g, 1991f) is expected to achieve ARARs associated with ground-water treatment.

4.3.3.2 Implementability

Vacuum-enhanced vapor extraction is a technically feasible remedial action for OU2. The simplicity of design, fabrication using commonly available materials, ease of maintenance and potential for cost-effective operation make in situ vacuum-enhanced vapor extraction an attractive remedial technology. Vapor extraction is a proven technology that has been successfully applied at many sites. In unconsolidated formations, vapor extraction has been successfully implemented in both coarse and fine-grained material. The alluvial material at the proposed test sites is expected to be coarse grained and consist of sand, gravel and lesser amounts of silt and clay. The bedrock material at the proposed test sites is consolidated and its permeability to air flow has not been quantified. Both sandstone and claystone bedrock is expected to have relatively low permeabilities when compared with the alluvium; however, bedrock permeability is expected to be high enough to permit a measurable vapor flow rate. Performance of the proposed systems will be demonstrated by calculating contaminant mass recovery rates based on vapor flows and contaminant concentrations. Regeneration services for the GAC adsorption units are readily available, and special labor skills are not necessary to construct and operate the vapor extraction and treatment equipment.

Factors limiting the success of in situ vacuum-enhanced vapor extraction at the 903 Pad include low formation permeability and amount of residual free-phase contamination in the subsurface. A review of existing data suggest that low formation permeability will not be a limiting factor in the alluvium, however, bedrock permeability may be low. Confirmation of source area locations will be critical to the successful implementation of this technology as an interim or final action. Should additional data become available during the Phase II RI suggesting a more promising test area, interim remedial efforts may be redirected to another site.

As noted in Section 4.2, CERCLA evaluation criteria include assessment of a proposed remedial action with respect to public acceptance. Several aspects of the proposed Plan should receive favorable public acceptance. For example, the information collected during the IM/IRA could expedite final remedial efforts at OU2. Moreover, conduct of the IM/IRA could achieve some degree of VOC source removal and subsequent destruction of recovered VOCs. Potential removal of subsurface VOC contamination without the need to excavate should also be received favorably. In addition, the proposed vacuum-enhanced vapor extraction actions pose a very low probability of spreading subsurface contamination. The risk of spreading VOC contamination is small because the soils affected are under negative pressure and the air

sweep induced by the vacuum is collected at the extraction wells. The risk of spreading subsurface radionuclide contamination is very low because they are non-volatile. Some public concern may result over the proposed use of air injection to enhance VOC recovery because of the increased risk of spreading VOC contamination. Proper design of the injection and extraction systems to ensure capture of all injected air minimizes this risk. Another favorable aspect of the Subsurface IM/IRA is the use of the Observational/Streamlined Approach in planning and implementing the IRA in order to maximize data quality and quantity. Finally, use of existing RFP water treatment facilities to treat ground water and condensate should also be viewed favorably.

No permits are required for implementation of the Subsurface IM/IRA. All materials needed to construct and operate the proposed interim remedial system are commonly available. During the installation of extraction wells, approximately 6 cubic yards of drill cuttings (waste soil) will be generated. This material may be classified as hazardous mixed waste. Extracted ground water will be treated at existing RFP facilities. Therefore, administrative feasibility of the proposed interim action appears high.

4.3.3.3 Environmental Impact

Commitment of Resources

The vapor extraction system proposed for the Subsurface IM/IRA at the 903 Pad will not require construction of additional treatment facilities, but will require commitment of resources (equipment and material) to install approximately six extraction wells with component HEPA filters, GAC units, water collection systems, and monitoring devices.

Treatment of contaminated subsurface water from OU2 will result in an incremental increase in site pickup and deliveries of spent GAC units and replacement units and chemicals for the pretreatment of water. If the pilot testing phase is successful and the vapor extraction system is expected to operate for a year or more, deliveries will be spread out over the course of the year and will be handled by one of the existing Plant chemicalsuppliers. The very small number of shipments involved for both the GAC units and the chemical treatment system will result in an insignificant impact to human health.

Off-site transportation impacts associated with the shipment of dewatering sludge to a mixed waste disposal site, will be very low as determined in DOE (1990b). Relatively low concentrations of contaminants, the physical form of the waste, disposal site acceptance criteria, and compliance with DOT packaging and transport requirements all contribute to very low health risks from incident-free shipment and accident events.

Transportation Impacts

The proposed subsurface water collection system involves transportation activities during installation and routine operations. Installation transportation activities will primarily involve the movement of equipment for drilling, well installation, material deliveries for installation, and potential off-site disposal of excavated soils resulting from drilling. Routine operations will require the transfer of collected water to the South Walnut Creek Basin Treatment System, periodic inspection and maintenance of the pumps and collection systems, and occasional off-site shipment of dewatering sludge to a low-level mixed waste disposal site. Potential health effects from fugitive dust during installation will have negligible impacts, as discussed earlier in this section. Given the limited extent of

transportation activities associated with the collection system and the health effect estimates presented in Appendix E, transportation health effects are predicted to be very small. Additional discussion details are provided in Appendix E.

Wetlands

Wetlands areas have been identified near the 903 Pad proposed action site. These wetlands are fed by several seeps that are located in two areas: approximately 1,000 feet to the southeast of the site, and approximately 1,200 feet to the north of the site. These seeps typically have flows that fluctuate seasonally and normally remain below 2 gpm. Many of these seeps dry up during periods of low recharge.

Dewatering activities at the 903 Pad are predicted to result in a water extraction rate of 1 gpm or less. Inasmuch as there are no technologies for effectively conducting vapor extraction when ground water is present, removal or collection of the water is a necessity. Ground-water extraction is not expected to have a significant impact on nearby wetlands because of the small expected flow and limited duration (3 years or less). However, it is known that there is considerable variation in the water table elevations within OU2, near surface water-bearing units. Therefore, it is possible that dewatering rates may be different than predicted and may have an indirect effect on wetlands. The total wetlands area that could be affected by the proposed 903 Pad action is estimated to be less than one-fortieth of an acre. Suitable habitat exists in the surrounding area to accommodate any temporary wildlife displacement. At the conclusion of the IM/IRA, ground-water flow will return to its previous levels, and any temporary wetlands impacts will be naturally mitigated.

Water treatment alternatives are considered in Section 4.6. If a treatment alternative is selected, its purpose would be to remove contaminants from the water that might reach a drinking water source. While it would be possible to reintroduce the treated water at the collection point or at the seeps, thus preserving the wetland areas, such a program would simply reintroduce clean water into a local ground-water system that is contaminated. This would contribute to an increased potentiometric surface and this an increased potential for contaminant migration.

Cumulative Impacts

Installation activities will result in increased vehicular traffic, engine emissions, and the number of workers. The number of personnel required for the project will be a small increase to the assumed yearly additional construction loading.

It is estimated that two workers will be involved in routine operation and maintenance of the vapor extraction system at the 903 Pad. The same workers will also be able to operate and maintain vapor extraction system systems at Mound and the East Trenches. This will have negligible impact on the number of Plant personnel. In routine operations, these workers will not be exposed to any levels of chemicals or waste stream pollutants that would restrict them from other assignments at the RFP.

4.4 VACUUM-ENHANCED VAPOR RECOVERY AT MOUND (IHSS No. 113)

This section presents a detailed description of the proposed action at the Mound Area. This discussion focuses on the expected test site conditions, proposed treatment systems, and Observational/Streamlined Approach considerations with respect to deviations in expected test site conditions.

4.4.1 Test Site Description

4.4.1.1 Test Site Selection Rationale

The rationale and criteria used for selection of the Subsurface IM/IRA test sites is discussed in Section 4.3.1.1. IHSS No. 113, a former drum storage location at the Mound Area, is the second site proposed for pilot testing in situ vacuum-enhanced vapor extraction. Its location within OU2 is shown in Figure 2-2. IHSS No. 113 satisfies all three test site selection criteria as discussed below.

IHSS No. 113 was used to store an estimated 1,405 drums containing primarily depleted uranium- and beryllium-contaminated lathe coolant (a mixture of 70 percent hydraulic oil and 30 percent carbon tetrachloride). Records do not indicate that the drums were buried (Calkins, 1970). Some drums also contained Perclene (Smith, 1975). Perclene was a brand name of tetrachloroethylene (Sax and Lewis, 1987). Initial remediation of this site was accomplished in May 1970. It is not clear from the literature whether fluid was observed to have leaked from these drums before or during cleanup. However, a release of free-phase chlorinated hydrocarbons is inferred from the chemistry of water samples collected from a monitoring well adjacent and hydraulically downgradient of IHSS No. 113 (Well No. 0174 [Figure 2-12]). Water samples collected in May 1987 and 1989 contained 528.0 mg/l and 45.0 mg/l of PCE, respectively. The solubility of PCE at standard temperature and pressure is approximately 160 mg/l suggesting the presence of free-phase PCE near IHSS No. 113. The potential for residual free-phase chlorinated solvents at this site coupled with a lack of evidence for buried drums makes this site suitable for the Subsurface IM/IRA.

Soil sampling conducted at IHSS No. 113 after the May 1970 clean-up indicated 0.8 to 112.5 disintegrations per minute per gram (dnm/g) (0.4 to 51 pCi/g) activity. This contamination is thought to have been transported by wind from the 903 Pad Drum Storage Site. Nothing has been found in the literature to suggest the presence of metallic nuclear material buried at IHSS No. 113.

4.4.1.2 Expected Conditions

No site-specific hydrogeologic or chemical information is currently available for the area within IHSS No. 113 boundaries. However, several exploratory boreholes were drilled and monitoring wells constructed near the test site. These data were used to construct a conceptual model of the site hydrogeology and contaminant type and distribution. A geologic log of the borehole drilled for monitoring well 2087 (approximately 20 feet east of IHSS No. 113), which is typical of the IHSS No. 113 area, is presented in Appendix D. An idealized block diagram of the IHSS No. 113 test area is presented in Figure 4-8. The diagram illustrates the hydrogeology and contaminant distribution expected to exist within 50 feet of the ground surface. Sand and gravel alluvium extends to approximately 10 feet below ground surface and overlies claystone bedrock that may contain isolated or interconnected fractures. The alluvium is expected to be dry but may contain a small amount of seasonal ground water perched on the underlying claystone bedrock. The bedrock is not expected to contain recoverable ground water.

It is expected that PCE comprises the majority of the VOC contamination in the IHSS No. 113 area with lesser amounts of carbon tetrachloride. A sample of ground water collected from monitoring well 0174 (Figure 2-12), located adjacent to IHSS No. 113, contained PCE at a concentration that exceeded its solubility limit. The well screen crosses the alluvial/bedrock boundary suggesting that free-phase PCE released at IHSS No. 113 infiltrated the

alluvium coming to rest on the claystone bedrock. It is likely that a small amount of free-phase PCE or an emulsion of PCE and seasonal ground water flowed towards and entered Well 0174. The conceptual diagram shows the residual DNAPL in the alluvium and pools of DNAPL perched on the claystone bedrock with some infiltration of DNAPL along bedrock fractures. A review of existing monitoring well as-built diagrams and ground-water chemistry (Rockwell, 1987a) with respect to the presence of dissolved or residual free -phase chlorinated solvents in the

claystone bedrock near IHSS No. 113 was inconclusive. It is important to note that the presence of pools of DNAPL perched on the bedrock is also uncertain and may never be conclusively determined. However, the presence of very high concentrations of PCE in a monitoring well adjacent to IHSS No. 113, and in light of the inventory of drum numbers and contents stored at IHSS No. 113, it is reasonable to infer the presence of residual free-phasechlorinated solvents in the vadose zone. This material may be mobilized during periods of high precipitation when ground water may be perched on the claystone bedrock.

4.4.2 Remedial Approach

4.4.2.1 Proposed Action Based On Expected Conditions

This section provides a detailed description of the interim remedial action proposed for implementation at the Mound Area test site (IHSS No. 113). The proposed action is based on the idealized conceptual hydrogeologic and contaminant distribution model described in Section 4.4.1.2, and involves:

- In situ vacuum-enhanced vapor extraction for the alluvial material.
- In situ vacuum-enhanced vapor extraction in the upper portion of the underlying claystone bedrock.

Vapor Extraction

Figure 4-9 illustrates the configuration of the vapor recovery system. At IHSS No. 113, two vapor extraction wells will be installed in both the alluvium and the upper portion of the claystone bedrock and manifolded to one or more vacuum pump(s). The precise location of the vapor recovery wells has not been determined as there currently is no contaminant concentration data available for the area within IHSS No. 113 boundaries. A Phase II RI is currently in progress at OU2 and includes the advancement of soil borings and the construction of groundwater monitoring wells within IHSS No. 113 boundaries. Prior to implementation of this portion of the IM/IRA, a review of available RI data will be conducted with respect to identified locations of residual chlorinated hydrocarbons. In order to prevent significant short circuiting

of atmospheric air to the vapor extraction wells, the upper 6 feet of the well will be constructed of blank casing. Should contamination be observed during drilling in the upper 5 feet of soils, the well screen will extend across shallow contaminated soils, but no less than 2 feet below the surface. In this case, an impermeable cover will be installed over the ground surface within 10 feet of the vapor extraction wells.

Interim remedial efforts in the alluvium and bedrock will be isolated from each other in order to prevent cross-contamination between the two distinct formations. Bedrock wells will be isolated from the alluvium by the installation of steel surface casing set into the bedrock. Alluvial and bedrock well construction schematics are provided in Figure 4-5. One air injection well will be installed in both the bedrock and alluvium and will

be located between the vapor extraction wells. These wells will be used to inject ambient and heated air into the formations to evaluate any enhancement to VOC recovery due to the additional flow and heat. Ambient and warm air will be injected at a rate equal to one-half of the combined extraction rate. This is to insure that injected air does not further disperse vapor phase contaminants in the vadose zone. Under ideal conditions of isotropy and homogeneity of the alluvial soils or bedrock, air flow lines can be expected to form a closed loop between the injection and extraction wells given reasonably close well spacing (<25 feet). Radial pressure distribution equations (Johnson et. al, 1989) will be used during Test Plan development to insure that negative pressures are maintained at the boundary of the test area. Static pressure monitoring wells will be installed at various distances from the well array to verify capture and to determine the area of influence of the vapor extraction system.

The conceptual hydrogeologic model illustrated in Figure 4-8 shows some limited penetration of DNAPL into bedrock fractures. The lack of conclusive evidence of contaminant migration into bedrock suggests the need for a conservative approach to bedrock remedial efforts. For this reason, it is proposed to install vapor recovery wells to a maximum of 30 feet into bedrock.

Dynamic performance and effectiveness of the in situ vapor extraction system at IHSS No. 113 will be assessed as described in Section 4.3.2.1.

The proposed test site selection was based on qualitative data from the proposed test site and conditions extrapolated from quantitative data collected near the proposed test site. Should the proposed test site prove inadequate, an alternative test site will be selected. The most likely reason for poor site conditions is the absence of residual free-phase DNAPL. A preliminary threshold for determining success will be concentrations of hydrocarbon compounds recovered in the soil vapor equal to 1 ppm as measured with a portable photoionization detector calibrated for the major contaminant expected at the test site. The test will be conducted for a minimum of 7 days before abandonment and new site selection. If the recovered vapor contains hydrocarbon concentrations equal to or greater than 1 ppm, the test duration will be decided while the test is in progress. In any case, test duration should not exceed three months.

Vapor Treatment

A discussion of the system proposed to treat vapors extracted from the subsurface at the IHSS No. 113 test site is presented in Section 4.3.2.1.

4.4.2.2 Observational/Streamlined Approach Considerations

A summary of the expected conditions, potential deviations and contingencies relevant to the proposed action at Mound is presented in Table 4-2. Many of the items presented in Table 4-2 are identical for each proposed OU2 test site. Therefore, this section will address only those items that are unique to the Mound test site. The reader is referred to section 4.3.2.2 for a detailed discussion of the items common to all OU2 test sites. The Mound test site is unique in that no recoverable ground water is expected in either the alluvium or bedrock. The potential deviation would be the presence of a saturated thickness greater than 3 feet in the alluvium and/or an accumulation of ground water in the bedrock vapor extraction wells. This potential deviation from expected conditions would be identified by direct measurement with an electronic water level indicator. In this event, the existing wells would be retrofitted with ground-water recovery pumps. Ground water recovered during pilot testing would be transported by tank truck to the South Walnut Creek Basin Surface Water Treatment Facility for

treatment.

4.4.3 Evaluation of Remedial Approach

4.4.3.1 Effectiveness

Evaluation of the proposed IRA at the Mound Area with respect to CERCLA effectiveness criteria is essentially the same as the effectiveness evaluation presented in Section 4.3.3.1. One difference, however, is the elimination of treatment system sludge production and associated land disposal since ground water is not expected to be recovered at the Mound Area test site.

4.4.3.2 Implementability

Evaluation of the proposed interim remedial action at the Mound Area with respect to CERCLA implementation criteria is the same as the implementability evaluation presented in Section 4.3.3.2.

4.4.3.3 Environmental Impact

Commitment of Resources

Commitment of resources for the vapor extraction system proposed for the Subsurface IM/IRA at Mound will be virtually identical to that of the 903 Pad described in Section 4.3.3.3. This level of commitment will be low, and will not have a significant impact on RFP operations. Transportation Impacts

Transportation impacts for the Mound vapor extraction system are virtually identical to those described for the 903 Pad in Section 4.3.3.3.

Wetlands

Wetlands areas have been identified near the Mound proposed action site. These wetlands may be fed by surface seep flow and are located in two areas: approximately 1,000 feet to the north of the site (seeps), and approximately 1,000 feet to the northwest of the site (seeps and South Walnut Creek). These seeps typically have flows that fluctuate seasonally and normally remain below 2 gpm. Many of these seeps dry up during periods of low recharge. South Walnut Creek flows range from 5 gpm to 60 gpm.

Dewatering activities at the Mound are not expected to result in any significant water collection; therefore, no impact on nearby wetlands is expected. However, it is known that there is considerable variation in the water table elevations in near surface water bearing units at OU2. Consequently, it is possible that dewatering may be necessary at Mound and this may have an indirect effect on nearby wetlands. The total wetlands area that could be affected by the proposed Mound action is estimated to be less than one-fortieth of an acre. Suitable habitat exists in the surrounding area to accommodate any unlikely wildlife displacement. At the conclusion of the IM/IRA, ground-water flow, if affected, will return to its previous levels and any temporary wetlands impacts will be naturally mitigated.

Water treatment alternatives are the same as those described for 903 Pad in Section 4.3.3.3.

Cumulative Impacts

Cumulative impacts are expected to be the same as those described for the

903 Pad.

4.5 VACUUM-ENHANCED VAPOR EXTRACTION AT EAST TRENCHES AREA (IHSS NO. 111.1)

This section presents a detailed description of the proposed interim remedial action at the East Trenches Area. This discussion focuses on the expected test site conditions, proposed treatment systems, and Observational/Streamlined Approach considerations with respect to deviations in expected test site conditions.

4.5.1 Test Site Description

4.5.1.1 Test Site Selection Rationale

The rational and criteria used for selection of the subsurface IM/IRA test sites is discussed in Section 4.3.1.1. IHSS No. 111.1 (Trench T-4) burial site at the East Trenches Area, is the third site proposed for pilot testing in situ vacuum-enhanced vapor extraction. Its location within OU2 is shown on Figure 2-2. IHSS No. 111.1 satisfies all three test site selection criteria as discussed below.

A review of the literature revealed little specific information about the historical use of IHSS No. 111.1. The available information describes waste disposal activities at the East Trenches Area as a whole. To summarize, the burial trenches in this area were used between 1954 and 1968 for the disposal of sanitary sewage sludge contaminated with uranium and plutonium and approximately 300 flattened empty drums contaminated with uranium (Illsley, 1983). However, IHSS No. 111.1 is not expected to contain flattened drums. Figure 2-2 identifies those trenches where drums were observed or detected by magnetometer survey.

Based on this description, one would not expect to find significant concentrations of chlorinated solvent. However, a water sample collected in May 1988 from a monitoring well 3687 (Figure 2-13) adjacent to IHSS No. 111.1 contained 221.8 mg/l of TCE. The solubility of TCE is 1,100 mg/l at standard pressure and temperature. The concentration of TCE in the water sample represents a significant fraction of the TCE solubility limit suggesting the possibility of residual free-phase TCE near IHSS No. 111.1.

Although the radiation content of the sewage sludge reportedly ranged from 382 pCi/g to 3,590 pCi/g (Owen and Steward, 1973) there are no reports of metallic nuclear material deliberately buried in IHSS No. 111.1. The only other material reportedly buried in IHSS No. 111.1 is plutonium- and uraniumcontaminated asphalt planking from the solar evaporation ponds (Illsley, 1983). The potential presence of residual free-phase TCE coupled with a lack of buried drums and metallic nuclear material makes IHSS No. 111.1 a suitable test site for this IM/IRA.

4.5.1.2 Expected Conditions

No exploratory borings have been advanced through IHSS No. 111.1; however, two borings were advanced approximately 40 feet north of the trench. Monitoring wells were constructed in these boreholes (Wells 3587 and 3687) (Figures 2-13 and 2-15, respectively) and geologic, water level, and chemistry data are available. These data were used to construct a conceptual model of the site hydrogeology and contaminant type and distribution. A geologic log of a borehole advanced for monitoring well 3687 (typical of the test area) is presented in Appendix D. An idealized block diagram of the test area is presented as Figure 4-10. The diagram illustrates the hydrogeology and contaminant type and distribution within 120 feet of the ground surface.

Sand and gravel alluvium extends to approximately 10 feet below ground surface and overlies primarily sandstone bedrock. At Well 3687 (Figure 213), an 11 foot thick interval of sandy claystone was reported directly underlying the alluvium. A fine- to medium-grained sandstone underlies the sandy claystone and extends to at least 75 feet below ground surface. The sandstone isunderlain by claystone which may contain isolated or interconnected fractures. Unconfined ground water is expected to be encountered at 35 feet below ground surface in the sandstone. Bedrock geology varies in the area immediately surrounding IHSS No. 111.1. Based on geologic logs of nearby soil borings, claystone underlies the alluvium south of IHSS No. 111.1 and sandstone underlies the alluvium to the west.

TCE is expected to be the primary contaminant at this test site. A sample of water collected in May 1988 from Monitoring Well 3687 contained 221.8 mg/l, which represents 20 percent of the TCE solubility limit. This well is screened in the sandstone bedrock. The high concentration of TCE within 40 feet of IHSS No. 111.1 suggests the presence of residual free-phase TCE in the soils and aquifer underlying this burial trench. The block diagram (Figure 4-10) shows the downward migration of DNAPL through the unsaturated alluvium and sandstone leaving a zone of residual free-phase solvent. Because the solvent has a specific gravity greater than 1.0, the solvent is shown migrating downward through the saturated zone coming to rest in structural depressions on the claystone, and migrating a short distance along fractures in the claystone. The presence of pools of DNAPL on the claystone is by no means

certain. Well cemented zones within the sandstone may have stopped its migration, or the capacity of the sediments overlying the claystone to absorb DNAPL may exceed the volume of DNAPL released from the trench. It is important to note that residual DNAPL and/or pools of DNAPL have not been observed at IHSS No. 111.1 or at OU2 in general. However, it is reasonable to infer its presence by extrapolating from nearby ground water chemistry, physical properties of the contaminants, and historical activities at OU2.

4.5.2 Remedial Approach

4.5.2.1 Proposed Action Based On Expected Conditions

The section provides a detailed description of the interim remedial action proposed for implementation at the East Trenches test site (IHSS No. 111.1). The proposed action is based on idealized conceptual hydrogeologic and contaminant distribution model described in Section 4.4.1.2, and involves:

- In situ vacuum-enhanced vapor extraction for the alluvial material.
- In situ vacuum-enhanced vapor extraction coupled with ground-water depression in the sandstone bedrock.

Vapor and Ground-Water Extraction

The claystone will not be addressed in this action. The depth to claystone at the test site is many times deeper than at other proposed OU2 test sites. Therefore, it is less likely that recoverable contamination has penetrated to claystone. Figure 4-11 illustrates the configuration of the vapor recovery system in cross-section and plain view.

Two vapor extraction wells will be installed in both the alluvium and the sandstone bedrock. One pair of alluvial and bedrock wells will be installed on either side of the burial trench. Because materials were buried in the trench and historical records of material type and quality may be inaccurate, it was believed appropriate to avoid drilling through the trench

itself. The Phase II RI that is currently in progress at OU2 includes the advancement of two soil borings

within IHSS No. 111.1. Prior to implementation of this portion of the IM/IRA, a review of available RI data will be conducted with respect to the presence of residual DNAPL or buried drums at this location.

Remedial efforts in the alluvium and sandstone will be isolated from each other in order to prevent cross-contamination between the two distinct formations. Sandstone wells will be isolated from the alluvium by the installation of steel surface casing set in sandstone. Alluvial and sandstone well construction schematics are presented as Figure 4-5. One alluvial well will be used for vapor extraction and the second well installed on the opposite side of the trench will be used as an ambient or heated air injection well to induce an air sweep under the trench. Both sandstone wells will be fitted with ground water depression pumps in order to expose any residual DNAPL held in the sandstone by capillary forces. One sandstone well will be manifolded to a vacuum pump. The second well installed on the opposite side of the trench will be used to inject ambient and heated air to induce an air sweep through the test site. For reasons discussed in Section 4.3.2.1, bedrock wells will extend several feet into the claystone bedrock. This is to allow for the collection and recovery of free-phase DNAPL should it be encountered at the sandstone/claystone interface.

The proposed test site selection was based on qualitative data from the proposed test site and conditions extrapolated from quantitative data collected near the proposed test site. Should the proposed test site prove inadequate, an alternative test site will be selected. The most likely reason for poor site conditions is the absence of residual free-phase DNAPL. A preliminary threshold for determining success will be concentrations of hydrocarbon compounds recovered in the soil vapor equal to 1 ppm as measured with a portable photoionization detector calibrated for the major contaminant expected at the test site. The test will be conducted for a minimum of seven days before abandonment and new site selection. If the recovered vapor contains hydrocarbon concentrations equal to or greater than 1 ppm, the test duration will be decided while the test is in progress. In any case, test duration will not exceed three months. Vapor and Ground-Water Treatment

A discussion of the systems proposed for treatment of vapors and ground water extracted from the subsurface at the IHSS No. 111.1 test site are presented in Section 4.3.2.1.

4.5.2.2 Observational/Streamlined Approach Considerations

A summary of the expected conditions, potential deviations and contingencies relevant to the proposed action at East Trenches is presented in Table 4-3. Many of the items presented in Table 4-3 are identical for each proposed OU2 test site. Therefore, this section will address only those items which are unique to the Mound test site. The reader is referred to Section 4.3.2.2 for a detailed discussion of the items common to all OU2 test sites.

The East Trenches test site is unique in that ground water is expected to be present in sandstone bedrock within 35 feet of the surface. However, available data suggest considerable variability in bedrock geology near the test site. Therefore, a potential deviation from expected conditions would be the presence of claystone or interbedded sandstone and claystone under the proposed test site. This condition may result in a lack of recoverable ground water. The mechanism to identify this deviation would include visual observation of soil samples recovered during drilling and by establishing

the presence or absence of water in the extraction wells using an electronic water level indicator. The contingency would involve abandoning the ground water pumping effort and performing a vacuum enhanced vapor recovery action similar to that proposed for the Mound Area test site.

4.5.3 Evaluation of Remedial Approach

4.5.3.1 Effectiveness

Evaluation of the proposed interim remedial action at the East Trenches Area with respect to CERCLA effectiveness criteria is the same as the effectiveness evaluation presented in Section 4.3.3.1.

4.5.3.2 Implementability

Evaluation of the proposed interim remedial action at the East Trenches Area with respect to CERCLA implementation criteria is the same as the implementability evaluation presented in Section 4.3.3.2.

4.5.3.3 Environmental Impact

Commitment of Resources

Commitment of resources for the East Trenches vapor extraction system will be very low and virtually the same as that described in Section 4.3.3.3 for the 903 Pad.

Transportation Impacts

These will be similar to the 903 Pad vapor extraction system impacts. Given the limited extent of transportation activities associated with the collection system and the health effect estimates presented in Appendix E, transportation health effects are predicted to be very small. Additional discussion details are provided in Appendix E.

Wetlands

Wetlands areas have been identified near the East Trenches proposed action site. These wetlands are associated with South Walnut Creek and Pond B-1 that are located approximately 800 feet to the north of the site. South Walnut Creek has flows which fluctuate seasonally, ranging from 5 to 60 gpm.

Dewatering activities at the East Trenches are predicted to result in a water collection rate of 1 gpm or less. Inasmuch as there are no technologies for effectively conducting vapor extraction when ground water is present, removal or collection of the water is a necessity. This is not expected to have a significant impact on nearby wetlands because of the small expected flow and the limited duration (3 years or less). However, it is known thatthere is considerable variation in the water table elevations in near surface water bearing units at OU2. Therefore it is possible that dewatering rates may be different than predicted and may have an indirect effect on wetlands.

The total wetlands area that could be affected by the proposed East Trenches action is estimated to be less than one-twentieth of an acre. Suitable habitat exists in the surrounding area to accommodate any temporary wildlife displacement. At the conclusion of the IM/IRA, groundwater flow will return to its previous levels, and any temporary wetlands impacts will be naturally mitigated.

Cumulative Impacts

Cumulative impacts of the vapor extraction system at the East Trenches will be the same as for the 903 Pad described in Section 4.3.3.3.

4.6 DESCRIPTION OF ALTERNATIVE WATER TREATMENT FACILITIES

The Subsurface IM/IRA considers the use of existing or planned RFP water treatment facilities for treatment of contaminated ground water and condensate associated with operation of the proposed vapor extraction systems at the 903 Pad, Mound, and East Trenches Areas. The final selection of the RFP treatment system(s) that will be used to support the Subsurface IM/IRA will be based on the actual contamination observed in the recovered ground water and the results of performance testing each of the treatment systems. However, for the reasons discussed in Section 4.3.2.1, the DOE wishes to retain the South Walnut Creek Basin Surface Water Treatment System as the preferred system at this time. Modifications to this initial strategy may be made as part of the observational/streamlined approach (see Tables 4-1 and 4-3 regarding ground water treatment).

This section describes each of the RFP treatment facilities with respect to operation, contaminant removal capabilities, and availableprocessing capacity. The RFP water treatment facilities include:

- South Walnut Creek Basin Surface Water Treatment System.
- 881 Hillside Ground-Water Treatment System.
- Building 231B GAC Adsorption System/Building 374 Evaporation System.

4.6.1 South Walnut Creek Basin Surface Water Treatment System

The South Walnut Creek Basin Surface Water Treatment System is being constructed as part of an IM/IRA at OU2 (EG&G, 1991f). The system includes chemical precipitation/microfiltration and GAC adsorption units for removal of radionuclides, metals, and VOCs from surface water. Installation of the GAC adsorption portion of this treatment facility has been completed, and operation began on 13 May 1991. Installation of the chemical precipitation and microfiltration units was completed on 24 April 1992, and system startup occurred on 27 April 1992.

The South Walnut Creek Basin Surface Water Treatment System is illustrated in Figure 4-12. Chemical treatment involves addition of iron salts and lime to cause coagulation and flocculation of suspended particulates present in the wastewater to produce a filterable ferric hydroxide precipitate or floc. Since the predominant state of radionuclide and metal contaminants in natural waters is particulate, these inorganic contaminants will be removed through enmeshment in the ferric hydroxide floc (EG&G, 1991f). Removal of radionuclides and metals existing in a soluble state may also be achieved during chemical treatment by adsorption to the floc. The floc will be removed from the process stream by cross-flow membrane filtration. The membrane filter is in a shell and tube configuration with the membrane located on the inside of the tubes. Water is pumped through the filter tubes and water passes through the membrane (i.e., permeate) under the force of the process operating pressure. The filters are designed so that clean water will pass through the membrane in a direction perpendicular to the main process flow (i.e. cross-flow filtration). Flow not passing through the membrane will be recycled to the concentration tank. A fraction of the recycle slurry will be bled from the process for solids removal by gravity separation and pressure filtration. The filter press cake is expected to be approximately 30 percent solids by weight, and will be stabilized with the addition of portland cement. The cross-flow filter permeate will be

neutralized by the addition of sulfuric acid and will be further processed by GAC adsorption units for removal of VOCs as described below. Figure 4-12 shows that the GAC Adsorption Treatment System for the South Walnut Creek Basin surface water treatment system consists of two on-line GAC units and two on-line, standby GAC units. Each GAC unit is 60 inches high and 87 inches in diameter and contains 2,000 pounds of GAC. The on-line units are operated in series (i.e., lead and polishing positions). Once the GAC in the lead unit is determined to be spent, it is taken out of service. The GAC unit in the on-line, polishing position becomes the new lead unit and one of the on-line, standby units is placed in the on-line, polishing position. "Rotation" of the GAC units into the lead, polishing, and standby positions is accomplished by changing the open/closed configuration of the process valves. Physical movement of unspent GAC units is not necessary during this procedure. The spent GAC is replaced with a new unit containing virgin GAC. The newly installed unit is immediately placed in the on-line, standby mode. Spent GAC will be analyzed for the presence of radionuclides and for toxicity by the EPA Toxicity Characteristic Leaching Procedure (TCLP). Results of these analytical tests will determine if spent GAC from this process may be regenerated or must be managed as a hazardous mixed waste. As of this writing, the process has not yet generated spent GAC.

The South Walnut Creek Basin Surface Water Treatment System wasdesigned to continuously process surface water influent at a rate of 60 gpm. This flow rate corresponds to the design flows established for the South Walnut Creek Basin IM/IRA surface water collection systems. However, design flows are maximum anticipated surface water flows for the collection systems, and influent flows from the South Walnut Creek Basin sources will, on the average, be substantially less than 60 gpm. For example, GAC Adsorption System operating data for May and June 1991, two relatively high precipitation months, indicate that on the average the South Walnut Creek Basin sources have produced less than 50 percent of collection system design flows. The unused processing capacity could be used to treat ground water and condensate generated by the Subsurface IM/IRA.

4.6.2 881 Hillside Ground-Water Treatment System

The 881 Hillside Ground-Water Treatment System is currently being installed under the groundwater IM/IRA for OU1. The system was designed to treat ground water recovered at the 881 Hillside Area. The rate of ground-water recovery is expected to be approximately 5 to 10 gpm and the ground-water contaminants of concern include VOCs, metals, and uranium. The treatment process operating plan includes treatment of collected ground water at the process design rate of 30 gpm during one 8-hour shift per day. The equipment remains idle throughout the remaining two shifts. Ground water and condensate generated by the Subsurface IM/IRA, therefore, be treated during one of the remaining 8-hour shifts.

Figure 4-13 shows that the design of the 881 Hillside Ground-Water Treatment System includes UV/ peroxide and ion exchange unit operations. A pumped feed system will be used to inject a 50 percent hydrogen peroxide solution into the wastewater influent line. The surface water/hydrogen peroxide mixture will then pass through an in-line static mixer before entering the UV oxidation reactor. In the reactor, the mixture is exposed to UV light where VOCs areoxidized to carbon dioxide and water.

The effluent from the UV oxidation reactor will then be pumped through fabric filtration units to remove any suspended solids that may be present in the processing stream. Dissolved uranium and metal contaminants will then be removed by the anion and cation exchange units, respectively. Regeneration of the anion exchange resin will not be required because of the high affinity and capacity of the resin for uranium. The expected life of

the anion exchange units is greater than 30 years at the expected influent flows and uranium concentrations. Although other anions (e.g., chlorides, sulfates) will initially be adsorbed to the resin, the preferential adsorption of uranium will result in displacement of the other anions. The spent resin will ultimately require solidification and disposal as a low-level hazardous waste. The cation exchange resin has a high affinity for high molecular weight metals (e.g., mercury, copper, lead). It is assumed that, unlike the anion exchanger, the cation exchange resin will require regeneration. Effluent from the ion exchange column train is stored in holding tanks pending laboratory analysis results. Upon verification that contaminants have been removed to achieve the effluent standards established for the facility, the treated water is discharged to the SID.

4.6.3 Building 231B GAC Adsorption System/Building 374 Evaporation System

A final alternative for treatment of ground water and condensate generated by the Subsurface IM/IRA is the use of the planned Building 231B GAC Adsorption System and the existing Building 374 Evaporation System. These treatment system configurations are illustrated in Figure 4-14, and are described below in detail.

The GAC adsorption system illustrated in Figure 4-14 is planned for construction and start-up near Building 231B by the end of 1992. This facility is being installed to provide VOC treatment for decontamination wastewater generated at the RFP (e.g., drill rig decontamination). Current treatment system design includes installation of a 13,000-gallon wastewater holding tank and a 5,000-gallon influent equalization tank. The 500,000-gallon wastewater holding tank shown in Figure 4-14 currently exists, but is not in use. Operating plans for the 231B GAC Adsorption System include use of this storage tank for additional influent storage capacity, when required. Treatment system design includes at least two fabric filtration units configured in parallel. The parallel configuration allows water to be treated with one filter on line while filtration media in the other filter is being replaced. Due to the relatively small quantities of decontamination wastewater generated annually (approximately 500,000 gallons) treatment system design includes disposable GAC units. The process will include two 55-gallon GAC units in a lead/polisher arrangement. Each 55 -gallon unit is 36 inches high and 22 inches in diameter, and contains approximately 165 pounds of GAC. The maximum rated flow capacity through each unit is 10 gpm. Although the fabric filtration units will remove the majority of the suspended solids from the process influent, small particulates will pass through to the GAC units. It is, therefore, expected that the GAC units will be contaminated with particulate radionuclides and, thus, require disposal as a hazardous mixed waste. The treatment system includes a 5,000gallon effluent storage tank to temporarily hold processed water prior to transport to Building 374.

The plan of operation for the Building 231B GAC Adsorption Treatment System includes tank truck transport of decontamination wastewater to the facility, batch processing of approximately 10,000 gallons per week at a flow rate of approximately 7 gpm, and tank truck transport of the treated effluent to the Building 374 Low-Level Wastewater Treatment System. The one-way

travel distance between Building 231B and Building 374 is approximately 1 mile via 7th Street, Central Avenue, PA Portal #1, and west on Patrol Road.

The Building 374 Low-Level Wastewater Treatment System (Figure 414) processes approximately 12 to 15 million gallons per year of low level wastewater (i.e., < 13,500 Pci/ of radioactivity). Influent sources of this system include RFP process wastewater and incidental RFP surface waters (i.e. site runoff). The treatment system includes chemical precipitation,

vacuum filtration, and evaporation unit operations. Chemical treatment involves addition of iron salts and lime to cause coagulation and flocculation of suspended particulates present in the wastewater to produce a filterable precipitate or floc. Radionuclide and metals contaminants present in the wastewater stream in a particulate state tend to become enmeshed in the floc as discussed in Section 4.6.1. The floc is then removed from the process stream by vacuum filtration. The filter cake produced is approximately 30 percent solids by weight, and is stabilized with the addition of portland cement. The inorganic contaminants in the filtered process stream are then concentrated by a four-stage multiple effect evaporator. Evaporator vapors, which are free of inorganic contaminants, are condensed and recycled to the RFP process water supply. The "brine" concentrate is processed by a spray dryer to evaporate the remaining liquid. The resulting byproduct solids (i.e., salts) are removed from the process by a bag filter unit, and subsequently solidified with the addition of portland cement. The volume of solidified waste or "saltcrete" from this action represents a small fraction of RFP's annual production of this type of waste. Storage and disposal plans for such waste were discussed in the environmental assessment for the partial closure action at the solar ponds (DOE, 1991c), for which a findingof no significant impact was issued. Because of the relatively low concentrations of the contaminants, the solid form of the waste, the protectiveness of the packaging, and the compliance with applicable RCRA requirements, storing these materials at the RFP or other DOE location pending disposal would not materially change the impacts assessed for this action.

The treatment technologies that comprise the Building 231B GAC Adsorption System and the Building 374 Low-Level Wastewater Treatment System (GAC adsorption, chemical precipitation/vacuum filtration, and evaporation) are well suited for removal of VOCs, radionuclides, and metals that may be present in the Subsurface IM/IRA ground water and condensate. In addition, extra processing capacity currently exists at both facilities. Although the Building 374 treatment facility often operates at its maximum capacity, influent storage at Building 231B and batch processing of collected ground water and condensate allow use of the facility during off-peak periods.

4.7 ENVIRONMENTAL EVALUATION OF NO ACTION

4.7.1 Air Quality Impacts

The No Action Alternative will not further impact the existing air quality as discussed in the RFP Final Environmental Impact Statement, 1980 (DOE, 1980).

4.7.2 Water Quality Impacts

The No Action Alternative would not contain or remove radionuclides, VOCs, or metals from the subsurface at OU2. As a result, the No Action Alternative would pose a long-term release risk to the general public. However, short-term risks associated with the No Action Alternative are insignificant because contaminated ground water is contained well within the RFP boundary, and surface water discharges from the RFP are monitored and treated, if necessary, in accordance with the Plant's NPDES permit. The No Action Alternative would require that the current quarterly site monitoring be continued.

4.7.3 Terrestrial and Aquatic Impacts

The No Action Alternative will not involve any short-term impacts to terrestrial and aquatic biota.

4.7.4 Wetlands and Floodplains

The No Action Alternative will not involve any short-term impacts to wetlands and floodplains.

4.7.5 Threatened and Endangered Species

The No Action Alternative will not impact threatened and endangered species.

4.7.6 Cultural Resources

The No Action Alternative will not impact cultural resources, as no sites at the RFP have potential eligibility for the National Register of Historic Places (EG&G, 1991a).

4.7.7 Short-Term Uses and Long-Term Productivity

Land within OU2 is currently undeveloped and will remain so as part of the RFP for the foreseeable future. OU2 lies within the RFP security boundaries and is not accessible to the general public. Therefore, the No Action Alternative will have no effect on the short-term uses and long-term productivity of lands at OU2.

4.7.8 Personnel Exposures

The No Action Alternative will have minimal impact on current workers involved at OU2 or at adjacent RFP sites. Workers will continue to monitor ground water quarterly which would not present any additional impacts. Because the sources of hazardous wastes would neither be removed nor controlled, the possibility of contaminated ground water migrating off site would increase over time. This could then become a source for public exposure in the long term.

4.7.9 Commitment of Resources

The No Action Alternative will not require any additional commitment of resources.

4.7.10 Transportation Impacts

The No Action Alternative will not require construction or transport of materials. Therefore, will be no additional on-site or off-site transportation activities.

4.7.11 Cumulative Impacts

Because there are no additional remedial activities associated with the No Action Alternative, there are no cumulative impacts relating to the environmental criteria identifiers in Sections 4.7.1 through 4.7.10.

4.8 COMPARISON OF ENVIRONMENTAL EFFECTS OF RFP IM/IRAs

Table 4-4 compares the environmental impacts of the proposed Subsurface IM/IRA at OU2 with other IM/IRAs currently being implemented at RFP. There are no environmental impacts associated with the No Action Alternative with respect to subsurface VOC contamination at OU2 as indicated in Table 4-4. This is consistent with the absence of any threat posed by the subsurface VOC contamination at OU2 (Section 1). Impacts in all categories from the proposed action (environmental, long-term, public exposure, worker exposure, off-site and on-site transportation) are not expected to be significant.

SECTION 5

IMPLEMENTATION PLAN

This section presents the implementation plan for conduct of the Subsurface IM/IRA. Implementation involves the preparation of a Test Plan for each of the three pilot tests proposed in the IM/IRAP/EA. The Test Plans will provide all the engineering designs, performance specifications, and procedures necessary for well installation and fabrication of the vapor extraction andtreatment unit. The Test Plans will also provide the necessary procedures and guidance to successfully execute the pilot tests. Following completion of each pilot study, a Test Report will be prepared summarizing the test data. Recommendations for post-pilot study operation of the in situ vacuum-enhanced vapor extraction system will also be presented in each Test Report based on evaluations of the test data. Sections 5.1 and 5.2 discuss the elements of the Pilot Test Plans and Test Report, respectively.

5.1 PILOT STUDY TEST PLANS

Test Plans will be prepared to provide comprehensive and detailed guidance for conduct of the Subsurface IM/IRA pilot studies at OU 2. A Test Plan will be prepared for each of the three pilot studies (i.e., 903 Pad, Mound, and East Trenches). Although the Test Plans will be similar in format and content, each will be tailored to test-specific objectives. Table 5-1 provides a preliminary outline that will be used to prepare the Test Plans. Although the final Test Plan format may differ from that shown in Table 5-1, the elements represented by each of the sections listed will be addressed.

Section 1 of the Test Plan briefly describes the purpose of the pilot study and notes its role within RI/FS activities at OU 2. The introduction will also present a summary of Phase II RI data pertinent to the pilot test that has become available since preparation of the Subsurface IM/IRAP/EA. Section 2 will discuss the scope of the pilot test. Section 3 will define the data quality objectives (DQOs) for conduct of the pilot test. DQOs will be developed, based on the goals of the proposed IRA. These goals include: assessment of vapor extraction as a means for removing subsurface, residual free-phase VOC contamination at OU2; determination of the area

Table 5-1

Subsurface IM/IRA Test Plan Outline

I. Introduction

II. Scope of Pilot Study

III. Data Quality Objectives

IV. Well Design and Installation

V. Vapor Extraction and Treatment System Design, Construction, and Commissioning

VI. Pilot Test and Data Collection Procedures

VII. Data Evaluation

Appendices

Quality Assurance Project Plan

Sampling and Analysis Plan

Health and Safety Plan

Data Management Plan

of influence of the vapor extraction system; and prediction of post-pilot study system performance. Section 4 will include the specifications and engineering design drawings for completion of the vapor and ground-water extraction and air injection wells. This section will specify the procedures to be followed for well installation and field engineering change requests. Criteria for well abandonment and alternative well placement will also be provided. Similarly, Section 5 will provide equipment specifications, system design drawings, and system performance specifications for the vapor extraction pilot unit. This section will also provide system start-up and troubleshooting guidance. Section 6 will present detailed procedures for conduct of the pilot test. Vapor extraction and treatment system operating procedures will be specified, including system shutdown criteria. This section will also present pilot study data collection requirements. Section 7 of the Test Plan will present guidance for evaluation of pilot test data. This guidance will include, but not be limited to, equipment and system performance assessment,contaminant mass recovery computation, subsurface areal influence estimation, and post-pilot study operation assessment.

The Test Plans will also include project-specific quality assurance/quality control (QA/QC), sampling and analysis, health and safety, and data management guidance for conduct of the pilot studies. QA/QC guidance will be provided in the form of a project-specific addendum to the EM Site-Wide Quality Assurance Program Plan (EG&G, 1991) and the ER RCRA/CERCLA Quality Assurance Project Plan (EG&G, 1991). Health and safety guidance will be provided in the form of a project-specific addendum to the ERHSPP (EG&G, 1989). EM Department Standard Operating Procedures will also be referenced in the Test Plans when applicable.

Preparation of the first Pilot Test Plan will begin immediately after regulatory agency approval of the Subsurface IM/IRAP/EA. Draft and final Test Plans will be submitted to EPA and CDH for approval prior to implementation. The Test Plans will be available for public review, but will not be subject to formal public comment.

5.2 PILOT TEST REPORTS

A Pilot Test Report will be prepared at the conclusion of each OU2 in situ vapor extraction pilot test. The Test Reports will summarize the tests conducted, present test data and data evaluation results, and present recommendations for post-pilot study operation of the vapor extraction systems.

Draft and final Pilot Test Reports will be prepared and submitted to the regulatory agencies for review and approval of post-pilot study recommendations. The final Test Report will be made available to the public.

5.3 IM/IRA SCHEDULE

A proposed schedule for preparing the planning documents for the Subsurface IM/IRA is presented in Table 5-2. The proposed pilot tests (i.e., 903 Pad, Mound, and East Trenches) sequential implementation allows knowledge gained from the first test to be incorporated into the second, and so on. Table 5-2 presents specific completion dates for IM/IRA activities leading up to the startup of the pilot unit at the first test site. Due to the uncertainty associated with the actual length of time that will be required to complete the first pilot completion dates for activities subsequent to the first

pilot test are listed in time durations relative to conclusion of the first pilot test.

TABLE 5-2

Proposed Schedule
Subsurface IM/IRA
Operable Unit No. 2

Activity	Date
Submit Draft Proposed Subsurface IM/IRAP/EA to EPA/CDH	02 March 1992
EPA/CDH comments on Draft Proposed Subsurface IM/IRAP/EA	16 March 1992
Submit Proposed Subsurface IM/IRAP/EA to Public-Public Comment Period Begins	20 March 1992
Public Meetings	07 April 1992 07 May 1992
Public Comment Period Concludes	18 May 1992
Submit Draft Responsiveness Summary to EPA/CDH	16 June 1992
EPA/CDH Comments on Draft Responsiveness Summary	23 June 1992
DOE-Headquarters approves Final Responsiveness Summary, Final IM/IRAP/EA, and NEPA Decision (i.e., FONSI)	19 August 1992
Submit Final Responsiveness Summary and Final IM/IRAP/EA to EPA/CDH	20 August 1992
EPA/CDH Approves Final Responsiveness Summary and Final Subsurface IM/IRAP/EA	03 September 1992
Release Final Responsiveness Summary and Final Subsurface IM/IRAP/EA to Public-Two-week Public Availability Period Begins	10 September 1992
Two-week Public Availability Period Concludes	24 September 1992
Site 1 Pilot Test:	
Submit Draft Test Plan to EPA/CDH	29 October 1992
EPA/CDH Comments on Draft Test Plan	26 November 1992
Submit Final Test Plan to EPA/CDH, and Complete Pilot Unit Bid Package	12 January 1993
Solicit and Complete Evaluation of Subcontractor Bids/Issue Purchase Order	09 March 1993
Finalize Subcontractor Design Drawings/EG&G Issues Authorization to Proceed	26 April 1993
Complete Pilot Unit Installation	03 August 1993
Complete Inspection and System Startup/Begin Pilot Testing	15 September 1993

Complete Pilot Study	13 weeks after Pilot Study begins
Submit Draft Pilot Test Report to EPA/CDH concludes[a]	24 weeks after Site 1 Pilot Study
EPA/CDH Comments on Draft Pilot Test Report	3 weeks after receipt of Site 1 Draft Test Report
Submit Final Pilot Test Report to EPA/CDH	4 weeks after receipt of E P A / C D H Comments on Site 1 Draft Test Report
Site 2 Pilot Test:	10 weeks after EPA/CDH approves Site 1 Final Test Plan
Submit Draft Test Plan to EPA/CDH	4 weeks after receipt of Site 2 Draft Test Plan
EPA/CDH Comments on Draft Test Plan	9 weeks after receipt of E P A / C D H Comments on Site 2 Draft Test Plan
Submit Final Test Plan to EPA/CDH and Complete Pilot Unit Bid Package	8 weeks after completion of Site 2 Pilot Unit Bid Package
Solicit and Complete Evaluation of Subcontractor Bids/Issue Purchase Order	7 weeks after issuance of Purchasse Order
Finalize Subcontractor Design Drawings/EG&G Issues Authorization	14 weeks after a.) EG&G authorization to proceed, or b.) completion of Site 1 PilotStudy, whichever is later.
Complete Pilot Unit Installation	6 weeks after installation of Site 2 Pilot Unit Complete
Complete Inspection and System Startup/Begin Pilot Testing	

Complete Pilot Study	Within 13 weeks after Site 2 Pilot Study begins.
Submit Draft Pilot Test Report to EPA/CDH	24 weeks after Pilot Study concludes[a]
EPA/CDH Comments on Draft Pilot Test Report	3 weeks after receipt of Site 2 Draft Test Report
Submit Final Pilot Test Report to EPA/CDH	4 weeks after receipt of E P A / C D H Comments on Site 2 Draft Test Report
Site 3 Pilot Test:	
Submit Draft Test Plan to EPA/CDH	10 weeks after EPA/CDH approves Site 2 Final Test Plan
EPA/CDH Comments on Draft Test Plan	4 weeks after receipt of Site 3 Draft Test Plan
Submit Final Test Plan to EPA/CDH, and Complete Pilot Unit Bid Package	9 weeks after receipt of E P A / C D H Comments on Site 3 Draft Test Plan
Solicit and Complete Evaluation of Subcontractor Bids/Issue Purchase Order	8 weeks after completion of Site 3 Pilot Unit Bid Package
Finalize Subcontractor Design Drawings/EG&G Issues Authorization to Proceed Purchase	7 weeks after issuance of Order
Complete Pilot Unit Installation	14 weeks after a.) EG&G authorization to proceed, or b.) completion of Site 2 Pilot Study, whichever is later

Complete Inspection and System Startup/Begin Pilot Testing Site 3	6 weeks after installation of Pilot Unit Complete
Complete Pilot Study Site 3	12 weeks after Pilot Study begins.
Submit Draft Pilot Test Report to EPA/CDH Site 3	24 weeks after Pilot Study concludes[a]
EPA/CDH Comments on Draft Pilot Test Report	3 weeks after receipt of Site 3 Draft Test Report
Submit Final Pilot Test Report to EPA/CDH	4 weeks after receipt of E P A / C D H Comments on Draft Test Report

<Footnote>
a Schedule assumes 80 days for turnaround of analytical laboratory data.
</footnote>

SECTION 6

REFERENCES

AEC (Atomic Energy Commission). 1972. Environmental Statement for Land Acquisition, Rocky Flats Plant, Golden, Colorado. April 1972.

Burney (Burney & Associates, Inc.) 1989. An Archeological and Historical Survey of Selected Parcels Within the Department of Energy, Rocky Flats Plant, North Jefferson County, Colorado. January 1989

Calkins, K.W. 1970. Memorandum to L.M. Joshel; Dow Chemical Company, Rocky Flats Division. 19 August 1970.

Clark, D.L. 1991. Pyrophoric Potential of Finely Divided Plutonium Metal in Soil at the 903 Drum Storage Site, Rocky Flats Plant, Golden, Colorado. June 1991.

Cleveland, J.M. 1979. The Chemistry of Plutonium. American Nuclear Society, New York, New York.

Dames & Moore. 1991. Cultural Resources Class III Survey of the Department of Energy, Rocky Flats Plant, Northern Jefferson and Boulder Counties, Colorado (Version 1.0). Denver, Colorado. 1 August 1991.

DOE (U.S. Department of Energy) 1980. Final Environmental Impact Statement, Rocky Flats Plant Site, Golden, Jefferson County, Colorado. ERDA 1545-D, DOE/EIS-0064. April 1980.

DOE (U.S. Department of Energy) 1985. Preamble: National Environmental Policy Act, U.S. Department of Energy Order 5440.1C. 9 April 1985.

DOE (U.S. Department of Energy) 1986. Comprehensive Environmental Assessment and Response Program Phase 1: Draft Installation Assessment, Rocky Flats Plant. U.S. Department of Energy, unnumbered draft report.

DOE (U.S. Department of Energy) 1988a. Draft DOE NEPA Compliance Guide. Office of NEPA Project Assistance, Washington, D.C. October 1988.

DOE (U.S. Department of Energy) 1988b. Environmental Guidance Program Reference Book; ESA and the FWCA. U.S. DOE, Washington, D.C.

DOE (U.S. Department of Energy) 1988c. U.S. Department of Energy; Internal Dose Conversion Factors for Calculation of Dose to the Public. DOE/EH0071, Washington, D.C. July 1988.

DOE (U.S. Department of Energy) 1988d. Radiation Protection for Occupation Workers. U.S. Department of Energy Order 5480.11. December 1988.

DOE (U.S. Department of Energy) 1990a.

DOE (U.S. Department of Energy) 1990b. Radiation Protection of the Public and the Environment. U.S. Department of Energy Order 5400.5. 8 February 1990.

DOE (U.S. Department of Energy) 1991a. Federal Facility Agreement and Consent Order/Inter-Agency Agreement, U.S. Department of Energy. 22 January 1991.

DOE (U.S. Department of Energy) 1991b. Mixed Waste Disposal Operations at the Nevada Test Site, U.S. Department of Energy (Draft) 1991.

DOE (U.S. Department of Energy) 1991c. Environmental Assessment and Finding of No Significant Impact for the Dewatering and RCRA Partial Closure Action on Solar Evaporation Ponds. DOE/EA-0487. June 1991.

Donaldson, J. C., and L. MacMillan. 1980. "Oil and Gas: History of Development and Principal Fields in Colorado," In: Colorado Geology, pp. 175189, H. C. Kent and K. W. Porter, eds, Rocky Mountain Association of Geologists, Denver, Colorado.

Dow Chemical Company. 1971. Anonymous Memorandum, 15 January 1971.

DRCOG (Denver Regional Council of Governments) 1989. Population and Household Estimates. Denver, Colorado.

DRCOG (Denver Regional Council of Governments) 1990. DRCOG Regional Notes, 1990 Estimates. Denver, Colorado.

EG&G. 1990a. An Aerial Radiological Survey of the U.S. Department of Energy's Rocky Flats Plant and Surrounding Area, EGG-10617-1044.

EG&G. 1990b. Background Geochemical Characterization Report.

EG&G. 1990c. Phase II RFI/RIFS Workplan, Final, Operable Unit No. 2, 903 Pad, Mound and East Trenches Area.

EG&G. 1990d. Wetlands Assessment, Rocky Flats Plant Site.

EG&G. 1990e. Surface Water Interim Measures/Interim Remedial Action Plan/Environmental Assessment, Operable Unit No. 2.

EG&G. 1991a. Cultural Resources Class III Survey of the Department of Energy, Rocky Flats Plant, Northern Jefferson and Boulder Counties.

EG&G. 1991b. In Situ Surveys of the United States Department of Energy's Rocky Flats Plant, Golden, Colorado. EGG-10617-1129, UC-702. May 1991.

EG&G. 1991c. On-Site Transportation Manual.

EG&G. 1991d. Plan for Prevention of Contaminant Dispersion.

EG&G. 1991e. Threatened and Endangered Species Evaluation - Rocky Flats Site.

EG&G. 1991f. Surface Water Interim Measures/Interim RemedialAction Plan/Environmental Assessment, South Walnut Creek Basin at Operable Unit No. 2.

EG&G. 1991g. Surface Water Interim Measures/Interim Remedial Action Plan/Environmental Assessment, Woman Creek Basin at Operable Unit No. 2.

EG&G. 1991h. Hazardous Waste Requirements Manual. 1-10000-HWRM. May 1, 1991.

Emery, R.M, D.C. Klopfer, T.R. Garland and W.C. Weimer. 1975. "The Ecological Behavior of Plutonium and Americium in a Freshwater Pond." In: Radioecology and Energy Resources, pp. 74-75, C.E. Cushing, ed. Stoudsburg, Pennsylvania.

EPA (U.S. Environmental Protection Agency) 1985. Compilation of Air Pollutant Emission Factors. Volume I: Stationary Point and Area Sources, PB86-124906, Research Park, North Carolina.

EPA (U.S. Environmental Protection Agency) 1988. Limiting Valves of Radionuclide Intake and Air Concentration and Dose Conversion Factors for Inhalation, Submersion and Ingestion, EPA-520/1-88-020, Washington, D.C.

EPA (U.S. Environmental Protection Agency) 1989a. Considerations in Ground-Water Remediation at Superfund Sites. Office of Solid Waste and Emergency Response Directive 9355.4-03.

EPA (U.S. Environmental Protection Agency) 1989b. Remedial Investigation/Feasibility Study Streamlining. U.S. Environmental Protection Agency, Office of Solid Waste and Emergency Response Directive.

EPA (U.S. Environmental Protection Agency) 1989c. Risk Assessment Guidance For Superfund, Volume 1 Human Health Evaluation Manual (Part A), EPA/540/1-89/002.

EPA (U.S. Environmental Protection Agency) 1989d. Superfund LDR Guide #7, Determining When Land Disposal Restrictions (LDRs) are Relevant and Appropriate to CERCLA Response Actions. Superfund Publication: 9347.3-08FS. December 1989.

EPA (U.S. Environmental Protection Agency) 1991. Health Effects Assessment Tables; Annual FY-1991. Office of Emergency and Remedial Response, Washington, D.C., OERR 9200.6-303(91-1).

Freiberg, K.J. 1970. Memorandum to E.A. Putzier, Dow Chemical Company,

Rocky Flats Division. 14 April 1970.

Gifford, F.A., Jr. 1961. Use of Routine Meteorological Observations for Estimating Atmospheric Dispersion, Nuclear Safety 2(4): 47-57. 1961.

Gifford, F.A., Jr. 1976. Turbulent Diffusion - Type Schemes: A Review, Nuclear Safety 17(1): 68-86. February 1976.

Hurr, R.T. 1976. Hydrology of a Nuclear Processing Plant Site, Rocky Flats Plant, Jefferson County, Colorado; U.S. Geological Survey Oper-File Report 76-268.

Illsley, C.T. 1983. Environmental Inventory - Updated Information on Burial Sites at Rocky Flats, EA-321-83-240. 28 January 1983.

Johnson, P.C., M.W. Kemblowski, J.D. Colthart, D.L. Byers, and C.C. Stanley. 1989. "A Practical Approach to the Design, Operation, and Monitoring of In Situ Soil Venting Systems, Shell Development Company." Presented at U.S. Environmental Protection Agency Workshop on Vacuum Extraction, Edison, NJ, 28 and 29 June 1989.

Little, C.A., C.A. Whicker, and T.F. Winsor. 1980. "Plutonium in a Grassland Ecosystem at Rocky Flats." Journal of Environmental Quality, Vol. 9, No. 3, July-September.

Orlandini, K.A., W.R. Penrose, B.R. Harvey, M.B. Lovett, M.W. Findlay. 1990. Colloidal Behavior of Actinides in an Oligotrophic Lake. In: Environmental Science and Technology, Volume 24, No. 5, 1990.

Owen, J.B. and L.M. Steward. 1973. Environmental Inventory - AHistorical Summation of Environmental Incidents Affecting Soils at or Near the U.S. Atomic Energy Commission Rocky Flats Plant; Dow Chemical Company, Rocky Flats Division.

Post, P. 1989. Personal Communication, U.S.D.A., Colorado Agricultural Statistics Service. November 1989.

Poston, T.M and D.C. Klopfer. 1988. Concentration Factors Used in the Assessment of Radiation Dose to Consumers of Fish: A Review of 27 Radionuclides. In: Health Physics, Vol. 55, No. 5:pp 751-766.

Rao, R.K., E.L. Wilmot, and R.E. Luna. 1982. Non-Radiological Impact of Transporting Radioactive Materials, SAND 81-1703, TTC-0236, Sandia National Laboratories, Albuquerque, NM.

Robson, S.G., J.C. Romero, and S. Zawistowski. 1981. Geologic Structure, Hydrology and Water Quality of the Arapahoe Aquifer in the Denver Basin, Colorado: U.S. Geological Survey Atlas HA-647.

Robson, S.G., A. Wacinski, S. Zawistowski, and J.C. Romero. 1981. Geologic Structure, Hydrology, and Water Quality of the Laramie-Fox Hills Aquifer in the Denver Basin, Colorado: U.S. Geological Survey Hydrologic Atlas HA-650.

Rockwell International. 1987a. Draft Remedial Investigation Report for 903 Pad, Mound, and East Trenches Areas, U. S. Department of Energy, Rocky Flats Plant, Golden, Colorado. 31 December 1987.

Rockwell International. 1987b. Resource Conservation and Recovery Act Part B - Operating Permit Application for U.S. DOE Rocky Flats Plant, Hazardous and Radioactive Mixed Wastes, Revision 1; U.S. Department of Energy, unnumbered report.

Rockwell International. 1988a. Draft Feasibility Study Report for High Priority Sites (881 Hillside Area). March 1988.

Rockwell International. 1988b. Letter from George Campbell to Albert E. Whiteman, Rocky Flats Area Office re: Endangered Species at the Rocky Flats Plant. 15 July 1988.

Rockwell International. 1988c. Draft Remedial Investigation Plan for 903 Pad, Mound, East Trenches Areas, Phase II Work Plan, U. S. Department of Energy, Rocky Flats Plant, Golden, Colorado. 30 June 1988.

Rockwell International. 1989a. Background Geochemical Characterization Report, U.S. Department of Energy, Rocky Flats Plant, Golden, Colorado. 15 December 1989.

Rockwell International. 1989b. Quality Assurance/Quality Control Plan: Environmental Restoration Program, Rocky Flats Plant. January 1989.

Rockwell International. 1989c. Draft Interim Measures/Interim Remedial Action Plan and Decision Document for 903 Pad, Mound, and East Trenches Area, U.S. Department of Energy, Rocky Flats Plant, Golden, Colorado. December 1989.

Sax, N. I. and R. J. Lewis. 1987. Hawley's Condensed Chemical Dictionary, Eleventh Edition, Van Nostrand Reinhold Company, New York.

Smith, R.E. 1975. Memorandum to D.J. Cockeram, Rockwell International, Rocky Flats Plant on Buried Radioactive Material. 2 September 1975.

USFWS (U.S. Fish and Wildlife Service). 1984. Peregrine Falcon Recovery Plan.

Weber, W.A., G. Kunkel, and L. Schultz. 1974. A Botanical Inventory of the Rocky Flats Atomic Energy Commission Site, Final Report; University of Colorado at Boulder, Colorado, report COO-2371-2.

Whicker, F.W., J.E. Pender, J.W. Bowling, J.J. Alberts, I.L. Brisbin. 1990. Distribution of Long-Lived Radionuclides in an Abandoned Reactor Cooling Reservoir. In: Ecological Monographs, Vol. 60, No. 4; pp. 471496.

Whicker, F.W. 1979. Radioecology of Natural Systems, Final Report for Period May 1, 1962 - October 31, 1979, COO-1156-117, Colorado State University, Fort Collins, Colorado.

DOE EA-0625

FINAL

SUBSURFACE
INTERIM MEASURES/INTERIM REMEDIAL ACTION PLAN/ENVIRONMENTAL ASSESSMENT AND DECISION DOCUMENT

OPERABLE UNIT NO. 2

U.S. DEPARTMENT OF ENERGY

Rocky Flats Plant
Golden, Colorado

ENVIRONMENTAL RESTORATION PROGRAM

10 September 1992

Volume II - Appendices

DOE EA-0625

SUBSURFACE INTERIM MEASURES/INTERIM REMEDIAL ACTION PLAN/ENVIRONMENTAL ASSESSMENT AND DECISION DOCUMENT

OPERABLE UNIT NO. 2

VOLUME II

U.S. Department of Energy
Rocky Flats Plant
Golden, Colorado

10 SEPTEMBER 1992

FINAL

Prepared by:

EG&G Rocky Flats, Inc.
Rocky Flats Plant
Golden, Colorado 80401

LIST OF APPENDICES

APPENDIX A-SOIL SAMPLING RESULTS

APPENDIX B-GROUND-WATER SAMPLING RESULTS

APPENDIX C-APPLICABLE OR RELEVANT AND APPROPRIATE REQUIREMENTS FOR GROUND-WATER CONTAMINANTS

APPENDIX D-GEOLOGIC LOGS

APPENDIX E-TRANSPORTATION ANALYSIS

PREFACE TO APPENDICES

The analytical data presented in Subsurface IM/IRAP/EA Appendices A and B were obtained from the Rocky Flats Environmental Database System (RFEDS). The data often include qualifiers to aid the reader in assessment of the contaminant concentrations reported. These qualifiers are defined in many of the data tables presented in the appendices. The five most common data qualifiers are briefly discussed here for the benefit of the reader.

B = Present in blank. As part of the laboratory Quality Assurance/Quality Control Program, sealed samples of distilled water accompany environmental samples as they are handled within the analytical laboratory. The distilled water samples are called laboratory blanks and are analyzed along with the environmental samples. The purpose of blank analysis is to reveal contamination of the associated environmental samples with chemicals used in the laboratory. Blank analysis often indicates the presence of volatile organic compounds commonly used as laboratory

solvents (e.g., acetone and methylene chloride). When analysis of a laboratory blank associated with an environmental sample reveals the presence of a chemical, the concentration of that chemical in the environmental sample is reported with an upper case "B" (e.g., 20B parts per billion).

D = All compounds identified in an analysis at a secondary deletion faction.

E = Estimated. Laboratory analysis indicates that the contaminant concentration is above the detection limit, but its value can only be estimated due to instrument signal interference (i.e., the presence of other chemicals) and/or the concentration is above the upper range of calibration of the instrument. The accuracy of concentration measurements that are "Estimated" vary from analysis to analysis. Estimated results are reported as the numerical value followed by the upper case "E" (e.g., 70E parts per billion).

J = Present below detection limit. Laboratory analysis indicates the chemical in question is present in the sample, but at a level below the method detection limit. In this case, the concentration of the chemical can only be estimated. The accuracy of concentration estimates that are below the method detection limit vary from analysis to analysis. Theestimated value is reported with an upper case "J" (e.g., 2J parts per billion).

U = Not detected. The sample was analyzed for the chemical in question, but was not detected. The result is reported as the numerical value of the method detection limit followed by an upper case "U" (e.g., 5U parts per billion).

The method detection limit for a chemical is specific to the sample analysis performed and is a function of the analysis method, instrument detection limit, and sample dilution factor. As a result, the method detection limit reported for a given chemical may vary from analysis to analysis. For example, non-detect analyses for trichloroethylene may be reported as 5U and 20U for two separate analyses.

RADIONUCLIDE AND VOLATILE ORGANIC COMPOUND DATA

The concentration units of radionuclides in soils are reported in pCi/gram (g) with the exception of tritium which is reported in pCi/ due to the analytical procedure. The concentration of VOC data is reported in micrograms per kilogram (ug/kg).

Uranium that is reported as the sum of all isotopes (U[283-234], U[235,238]). The concentration units of the radionuclide and volatile organic compound (VOC) data in ground water and surface water are reported picoCuries per liter (pCi/) and micrograms per liter (ug/l), respectively.

The reported concentrations of radionuclides in soil and ground water include values that are less than the corresponding calculated minimum detectable concentration and in some cases, values less than zero. Negative

values result when the measured value for laboratory reagent blank (i.e., background radioactivity) is subtracted from an analytical result that was measured as a smaller value than the reagent blank. These resulting negative values are included in any arithmetic calculations on the data sit.

Radionuclide concentration data is reported in the form of a b. For a single measurement "a" is the reagent blank corrected value; for multiple measurement "9" represents the average value (arithmetic mean). The error term "b" accounts for the propagated statistical counting uncertainty for the sample and the associated reagent blank at the 95% confidence level. These error terms represent a minimum estimate of error for the data.

APPENDIX A

SOIL SAMPLING RESULTS

SUBSURFACE IM/IRA
OPERABLE UNIT NO. 2

APPENDIX A-1

SOIL SAMPLING RESULTS
RAW DATA

SUBSURFACE IM/IRA
OPERABLE UNIT NO. 2

SOIL SAMPLING RESULTS
VOLATILE ORGANIC COMPOUNDS

SOIL SAMPLING RESULTS
TOTAL METALS

SOIL SAMPLING RESULTS
INORGANIC COMPOUNDS

SOIL SAMPLING RESULTS
RADIONUCLIDES

APPENDIX A-2

SOIL SAMPLING RESULTS
SUMMARY TABLES

SUBSURFACE IM/IRA
OPERABLE UNIT NO. 2

SOIL SAMPLING RESULTS
SUMMARY TABLES FOR VOLATILE ORGANIC COMPOUNDS

SOIL SAMPLING RESULTS
SUMMARY TABLES FOR TOTAL METALS

SOIL SAMPLING RESULTS
SUMMARY TABLES FOR INORGANIC COMPOUNDS

APPENDIX B

GROUND-WATER SAMPLING RESULTS

SUBSURFACE IM/IRA

OPERABLE UNIT NO. 2

GROUND-WATER SAMPLING RESULTS
DISSOLVED METALS

GROUND-WATER SAMPLING RESULTS
VOLATILE ORGANIC COMPOUNDS

APPENDIX B-1

GROUND-WATER SAMPLING RESULTS
RAW DATA

SUBSURFACE IM/IRA
OPERABLE UNIT NO. 2

GROUND-WATER SAMPLING RESULTS
TOTAL METALS

GROUND-WATER SAMPLING RESULTS
INORGANIC COMPOUNDS

GROUND-WATER SAMPLING RESULTS
DISSOLVED RADIONUCLIDES

GROUND-WATER SAMPLING RESULTS
TOTAL RADIONUCLIDES

APPENDIX B-2

GROUND-WATER SAMPLING RESULTS
SUMMARY TABLES

SUBSURFACE IM/IRA
OPERABLE UNIT NO. 2

GROUND WATER SAMPLING RESULTS
SUMMARY TABLES FOR VOLATILE ORGANIC COMPOUNDS

GROUND-WATER SAMPLING RESULTS
SUMMARY TABLES FOR DISSOLVED METALS

GROUND-WATER SAMPLING RESULTS
SUMMARY TABLES FOR TOTAL METALS

GROUND-WATER SAMPLING RESULTS
SUMMARY TABLES FOR INORGANIC COMPOUNDS

APPENDIX C

APPLICABLE OR RELEVANT AND APPROPRIATE
REQUIREMENTS FOR GROUND-WATER CONTAMINANTS

SUBSURFACE IM/IRA/EA
OPERABLE UNIT NO. 2

APPENDIX D

GEOLOGIC LOGS

SUBSURFACE IM/IRA

OPERABLE UNIT NO. 2

APPENDIX E

TRANSPORTATION ANALYSIS FORM

SUBSURFACE IM/IRA
OPERABLE UNIT NO. 2

APPENDIX E
TRANSPORTATION ANALYSIS

With the exception of the no action alternative, each of the IM/IRA sites (903 Pad, Mound, East Trenches) involves transportation activities during installation of the vapor extraction system and during subsequent operation of the collection/treatment processes. It is anticipated that primary shipments and vehicle movements during construction and normal operations will be by truck. Both on-site and off-site shipment of materials will be required to support the action. Potential transportation impacts to the human environment include exposure to the radioactive or hazardous material being hauled, latent effects associated with vehicle pollution, and traumatic injuries and fatalities from accidents.

An estimate of emission rates for operation of a typical truck are presented below:

Truck Emission Rate[a]

Pollutant	Emission Rate (g/km)
Carbon Monoxide	22.0
Hydrocarbons	3.3
Nitrogen Oxide	13.0
Sulfur Oxide	5.1
Particulates[b]	0.8

<Footnotes>
a From Rao et. al., 1982
b Does not include fugitive dust
</footnotes>

Estimates of health effects per kilometer for truck transportation are (Rao et. al., 1982):

Source	LCFs[a]	Injuries	Fatalities
Pollutants	1x10[-7]	-	-
Accidents	-	5.1x10[-7]	3.0x10[-8]

<Footnote>
a Latent cancer fatalities
</footnote>

The above accident impacts are average values over multiple population zones (urban, suburban, rural) and are derived from Department of Transportation (DOT) nationwide statistics. For the proposed IM/IRA, it is anticipated that the majority of material receipts for construction and routine

operations will originate within the Denver Metropolitan area, within a 50-mile (80 km) radius of the plant site. To place transportation impacts to the general public in perspective, given the health effects tabulated above, approximately 60,000 round-trip truck shipments (with a 1-way distance of 50 miles) would be required to cause 1 additional latent cancer fatality. Approximately 210,000 truck shipments would be required to result in 1 additional traumatic fatality.

Transportation of radioactive and hazardous materials at the Rocky Flats Plant must comply with the regulations and guidelines established by the On-Site Transportation Manual (EG&G, 1991) for packaging, marking, labeling, handling, transporting, and storing materials. The On-Site Transportation Manual is based on current rules and regulations (CFR Titles 10, 40, 49), applicable DOE orders, and ALARA exposure principals. Vehicle and driver qualifications are maintained in accordance with Federal Motor Carrier Safety Regulations. Emergency response guidance for transportation-related accidental spills or container failures is provided in Section 17 of the On-Site Transportation Manual. More detailed notification, response, and recovery action procedures are specified in the Rocky Flats Emergency Plan and the Hazardous Materials Response Team Manual. A HAZ-MAT team would respond to an emergency condition and would identify material hazard classes and make appropriate notifications; isolate and establish restricted zones; and take any necessary actions to contain, control, and prevent the spread of hazardous materials. An evaluation of transportation impacts for each IM/IRA site is presented below:

IM/IRA 903 Pad

IM/IRA 903 Pad activities involve transportation during vapor extraction system installation and routine operations.

Vapor extraction system installation transportation activities primarily involve the movement of a limited amount of equipment for drilling system setup and deliveries of vapor extraction system components. Direct impacts would include short-term effects common to all drilling projects, including dust generation, pollution, noise, and increased traffic levels. These impacts would be insignificant, considering the scope of this proposed action. Approximately 2 cubic yards of drilling cuttings and fluids may be classified as hazardous mixed waste and require off-site disposal. The soil contamination data currently available for radionuclides, VOCs, and metals are presented in Appendix A. These data suggest that the levels of all compounds detected in the soil remain well below the soil thresholds calculated in the Plan for Prevention of Contaminant Dispersion (PPCD) for drilling activities and vehicular traffic. For example, plutonium239/240 levels at the 903 Pad were found to range from 0.020 picocuries per gram (pCi/g) to 500 pCi/g. Thus, the highest level recorded is one order of magnitude below the soil threshold for vehicular traffic recommended in the PPCD and more than two orders of magnitude below the soil threshold of 68,200 pCi/g for well drilling. A similar situation exists for compounds detected at the Mound and East Trenches areas. Therefore, on the basis of existing data, neither well drilling nor vehicular traffic associated with the IM/IRA are expected to present significant health risks due to chemical exposure.

It is possible that ongoing soil analysis at OU2 associated with the RI will discover pockets of higher chemical contamination. In this event,the data from soil analyses will be compared to the PPCD soil thresholds. If soil thresholds are exceeded or if real time air monitoring suggests a potential problem, then mitigation measures including unpaved road-wetting applications will be implemented.

Possible human health impacts resulting from installation transportation related emissions and accidents would also be very small, given the tabulated emissions and health effects estimates presented at the beginning of this Appendix.

Routine operations will require the delivery of process treatment components (HEPA filters, desiccants, GAC), daily tank truck transfer of untreated and partially treated water, occasional vehicle travel for inspection and maintenance of the vapor extraction system wells and pumps, and off-site disposal of materials that will likely be classified as hazardous mixed waste. Based on dewatering system design flow rates of one gpm, 365 water transfer trips per year may be required initially between the 903 Pad vapor extraction system and the South Walnut Creek treatment system. An annual total round trip travel distance of approximately 190 miles would be required to support transfer operations. If the pilot vapor extraction system at the 903 Pad is successful, the water may be hard piped to the treatment system thus eliminating this travel. All travel would be confined to the plant site on paved roads. Occasional travel to the collection system areas will also be required for periodic inspection and maintenance activities. Annual hazardous mixed waste disposal estimates include 2 cubic yards of drilling fluids and cuttings, and 4 cubic yards of solidified process sludge. Off-site transportation impacts associated with the hazardous/radioactive nature of the material would be very low, as evaluated in DOE (1991b). Relatively low concentrations of contaminants, disposal site waste acceptance criteria, and compliance with DOT packaging and transport requirements all contribute to a very lowpotential for health effects from normal transport and accidents. Health impacts resulting from both on-site and off-site transportation emissions and accidents would be small, considering the relatively low number of total miles traveled and the transportation health effects estimates presented at the beginning of this Appendix.

IM/IRA Mound

IM/IRA Mound activities involve transportation during the vapor extraction system installation phase as well as during subsequent routine operations.

During vapor extraction system installation, transportation would include the movement of a limited amount of equipment for drilling, system setup, and deliveries of vapor extraction system components. As with the 903 Pad, direct impacts would include those short-term effects common to all drilling projects, including dust generation, pollution, noise, and increased traffic levels. From the scope of the alternatives, none of these impacts would be expected to be significant. Possible personnel impacts resulting from transportation-related emissions and accidents would be very small, based on the tabulated emissions and health effects estimates presented at the beginning of the Appendix.

Routine operations will require the delivery of process treatment components (HEPA filters, desiccants, GAC) and the possible off-site disposal of materials that will likely be classified as hazardous mixed waste. Currently, dewatering activities with the subsequent requirement for tank trucks and sludge disposal is not anticipated at Mound. Annual hazardous mixed waste disposal estimates include 2 cubic yards of drilling fluids and cuttings. Off-site transportation impacts associated with the hazardous/radioactive nature of the material would be very low as determined in DOE (1991b). Relatively low concentrations of contaminants, disposal site waste acceptance criteria, andcompliance with DOT packaging and transport requirements all contribute to very low health effects. Given the small number of off-site shipments and the tabulated emissions and health estimates presented in this Appendix, health impacts resulting from off-site

transportation emissions and accidents are anticipated to be very small.

Operational activities will also include periodic inspection and maintenance of the vapor extraction system pumps and piping system. Vehicle miles traveled to support these operations will be very small and will result in negligible impacts.

IM/IRA East Trenches

As with IM/IRA 903 Pad and Mound, East Trenches involves transportation activities during installation and routine operations.

Installation transportation activities would be very similar to the 903 Pad and involve the movement of a limited amount of equipment for drilling, vapor extraction system setup, deliveries of vapor extraction system materials, and potential off-site disposal of drilling fluids and cuttings. As with the 903 Pad and Mound installation, transportation impacts would be very small. Drilling cuttings and fluids (2 cubic yards) will possibly be classified as hazardous mixed waste and require off-site disposal. Associated impacts would be very low, as determined from DOE (1991b).

Routine operations will require the delivery of process treatment chemicals (GAC), tank truck transfer of collected surface water, periodic vehicle travel for inspection and maintenance of the vapor extraction system, and off-site disposal of drilling cuttings and sludge. Approximately 365 tank truck trips a year (150 round trip miles) will be required to transport collected subsurface water from the transfer station to the South Walnut Creek treatment plant. Annual off-site disposal requirements would primarily require theshipment of dewatering sludge (4 cubic yards). In general, routine transportation activities will be less than those for the 903 Pad and more than Mound and will have very small impacts.

ROCKY FLATS PLANT (USDOE)

Site Information:

Site Name: ROCKY FLATS PLANT (USDOE)
Address: GOLDEN, CO

EPA ID: CO7890010526
EPA Region: 08

Record of Decision (ROD):

ROD Date: 03/12/1997
Operable Unit: 01
ROD ID: EPA/541/R-97/195

Media: Surface soil,subsurface soil,groundwater,surface water/seeps,sediments

Contaminant: VOCs, SVOCs, pesticides, polychlorinated biphenyls (PCBs), metals and radionuclides. Site IHSS 119.1: carbon tetrachloride; 1,1-dichlorethene; tetrachloroethene; 1,1,1-trichlorethane; trichlorethene; and selenium

Abstract: Rocky Flats Plant (USDOE) is a government-owned, contractor-operated facility that is part of the nationwide nuclear weapons complex. The site was operated for the U.S. Atomic Energy Commission (AEC) from its inception during 1951 until the AEC was dissolved in 1975. Responsibility for Rocky Flats was then assigned to the Energy Research and Development Administration (ERDA), which was succeeded by the Department of Energy (DOE) in 1977. The Rocky Flats Environmental Technology site is located approximately 16 miles northwest of downtown Denver, in northern Jefferson County, Colorado. Most Rocky Flats structures are located within the industrialized area of Rocky Flats, which occupies approximately 400 acres and is surrounded by a buffer zone of approximately 6,150 acres. OU 1 is located adjacent to and on the south side of the Rocky Flats industrial area, on the hillside south and east to Building 881, and north of Women Creek.Until 1992, operations at Rocky Flats consisted of fabrication of nuclear weapons components from plutonium, uranium, stainless steel, and beryllium. Building 881, which is adjacent to Operable Unit (OU) 1, was used for enriched uranium operations and stainless steel manufacturing. Support activities at Rocky Flats included chemical recovery and

purification of recyclable transuranic radionuclides and research and development in metallurgy, machining, nondestructive testing, coatings, remote engineering, chemistry, and physics. These activities resulted in the generation of radioactive, hazardous, and mixed wastes. On-site storage and disposal of these wastes has contributed to hazardous and radioactive contamination in soils, surface water, and groundwater. During 1992, as an interim action, a French Drain was constructed across a portion of OU 1 to protect Women Creek from contaminated groundwater present in OU 1. The French Drain, along with an extraction well, collects contaminated groundwater moving towards Women Creek. The collected groundwater is transported to an ultraviolet/hydrogen peroxide and ion-exchange water treatment system located in Building 891. In addition, during 1994, plutonium contaminated surface soil "hot spots" were removed from OU 1.

Remedy: The action addresses the principal threat posed by OU 1 by excavating subsurface soil contamination at Industrial Hazardous Substance Site (IHSS) 119.1, a former drum and scrap metal storage area, thereby removing the current source of groundwater contamination. The major components of the selected remedial action at IHSS 119.1 (Soil Excavation and Groundwater Pumping) include: excavation of approximately 1,000 to 2,000 cubic yards of contaminated subsurface soils at IHSS 119.1; extraction and then ultraviolet/hydrogen and ion-exchange treatment of contaminated groundwater from the excavation; and either thermal-treatment and replacement of excavated soil into the original excavation, disposal of excavated soil in an on-site waste disposal cell, or off-site disposal of excavation.

Text: Full-text ROD document follows on next page.

<IMG SRC 971950>

CORRECTIVE ACTION DECISION/RECORD OF DECISION DECLARATION

SITE NAME AND LOCATION

Rocky Flats Environmental Technology Site, Operable Unit 1:881 Hillside Area, Jefferson County, Colorado

STATEMENT OF BASIS AND PURPOSE

This decision document presents the selected remedial action/corrective action for the Rocky Flats Environmental Technology Site (Rocky Flats) Operable Unit(OU)1:881 Hillside Area, located near Golden, Colorado. The selected remedial action was chosen in accordance with the Comprehensive Environmental Response Compensation and Liability Act(CERCLA)of 1980, as amended by the Superfund Amendments and Reauthorization Act (SARA) of 1986, the Colorado Hazardous Waste Act (CHWA) and to the extent practicable, the National Oil and Hazardous Substances Pollution Contingency Plan (NCP). The Resource Conservation and Recovery Act (RCRA) is administered through the CHWA by the Colorado Department of Public Health and Environment(CDPHE). OU 1 was investigated and a remedial action was selected in compliance with the Federal Facility Agreement and Consent Order-Interagency Agreement(IAG)signed by the U.S. Department of Energy(DOE), the State of Colorado, and the U.S. Environmental Protection Agency(EPA)on January 22, 1991. The selected remedial action is also consistent with the Federal Facility Agreement and Consent Order - Rocky Flats Cleanup Agreement(RFCA)signed by DOE, the State of Colorado and EPA on July 19, 1996. RFCA is now the governing cleanup agreement for Rocky Flats, and the selected remedy for OU I will be implemented in accordance with RFCA. The remedial action selection is based on the administrative record file for OU 1, and the State of Colorado concurs on the selected remedy.

ASSESSMENT OF THE SITE

Actual or threatened releases of hazardous substances from this site, if not addressed by implementing the response action selected in this Corrective Action Decision/Record of Decision (CAD/ROD), may present a future threat to public health, welfare, or the environment.

DESCRIPTION OF THE SELECTED REMEDY

OU 1:881 Hillside Area is one of sixteen geographically defined OUs at Rocky Flats that are identified in the IAG. RFCA consolidates these sixteen operable units into a fewer number, but OU 1 remains as a separate operable unit due to the fact that it is farther along in the administrative process and is nearing completion. OU 1 is composed of eleven Individual Hazardous Substance Sites (IHSSs). The selected remedy presented,in this CAD/ROD includes three primary components:

1. This action addresses the principal threat posed by OU 1 by excavating subsurface soil contamination at IHSS 119.1, a former drum and scrap metal storage area, thereby removing the current source of groundwater contamination. The major components of the selected remedial action at IHSS 119.1 (Soil Excavation and Groundwater Pumping)include:
   - Excavation of approximately one thousand to two thousand cubic yards of

contaminated subsurface soils at IHSS 119.1;

- Extraction and then ultraviolet/hydrogen peroxide and ion-exchange treatment of contaminated groundwater from the excavation; and

- Either thermal treatment and replacement of excavated soil into the original excavation, disposal of excavated soil in an on-site waste disposal cell, or off-site disposal of excavated soil.

2. Institutional controls will bd maintained throughout the OU 1 area in a manner consistent with RFCA, the Rocky Flats Vision, and the Action Levels and Standards Framework (ALF) (Attachment 5 to RFCA). These documents recognize that the reasonably foreseeable future land use for the OU 1 area is restricted open space. The institutional controls will ensure that the restricted open space land use is maintained for the OU 1 area and that domestic use of groundwater within the OU 1 area is prevented. If the reasonably foreseeable future land use for the OU 1 area changes when final sitewide land use decisions are made, this remedy will be reexamined to ensure protection of human health and the environment. The specific mechanisms (for example, deed restrictions) to ensure the implementation and continuity of the necessary institutional controls have not been included in this CAD/ROD. Currently, these mechanisms am envisioned to be placed in the Final Sitewide CAD/ROD or in this CAD/ROD during one of the five-year reviews of this document. However, should the Final CAD/ROD not occur or not include these institutional control mechanisms, this OU 1 CAD/ROD will be revised to include them, if it does not already include them as a result of a five-year review. The institutional controls can also be removed at one of the above times, if it is deemed appropriate to do so by the parties.

3. Because of the groundwater and land use controls, the low amounts of contamination in OU 1 outside of IHSS 119.1, and the low levels of risk associated with the contamination, no remedial action will be taken at the remaining ten IHSSs in OU 1.

Any surface soil contamination at OU 1 will be addressed jointly with surface soil contamination at the 903 Pad, Mound and East Trenches area (formerly OU 2).

STATUTORY DETERMINATIONS

The selected remedy for OU 1 satisfies the statutory requirements of CERCLA Section 121. The selected remedy is protective of human health and the environment, complies with Federal and State requirements that are legally applicable or relevant and appropriate to the remedial action, and is cost-effective. This remedy utilizes permanent solutions and alternative treatment technologies to the maximum extent practicable and satisfies the statutory preference for remedies that employ treatment that reduces toxicity, mobility, or volume as a principal element. Because this remedy will result in hazardous substances remaining in groundwater, a review will be conducted within five years after commencement of the remedial action to ensure that the remedy continues to provide adequate protection of human health and the environment.

<IMG SRC 97195A>

<IMG SRC 97195B>

DECISION SUMMARY

SITE NAME, LOCATION AND DESCRIPTION

The Rocky Flats Environmental Technology Site is located approximately sixteen miles northwest of downtown Denver, in northern Jefferson County, Colorado. A copy of a site location map is attached (Figure 1). Most Rocky Flats structures are located within the industrialized area of Rocky Flats, which occupies approximately four hundred acres and is surrounded by a buffer zone of approximately 6,150 acres. OU 1 is located adjacent to and on the south side of the Rocky Flats industrial area, on the hillside south and east of Building 881 and north of Woman Creek (Figure 2).

Geological Setting

Rocky Flats is located along the eastern edge of the southern Rocky Mountain region, immediately east of the Colorado Front Range. The site is located on a broad, eastward-sloping pediment that is capped by alluvial deposits of Quaternary age(i.e., Rocky Flats Alluvium). The tops of alluvial-covered pediments are nearly flat but slope eastward at fifty to two hundred feet per mile. At Rocky Flats, the alluvial-covered pediment surface is dissected by a series of east-northeast trending stream-cut valleys. The bases of the valleys containing Rock Creek, North and South Walnut Creeks, and Woman Creek lie fifty to two hundred feet below the elevation of the older pediment surface. These valleys incise into the bedrock underlying alluvial deposits, but most bedrock is concealed beneath colluvial material accumulated along the gentle valley slopes. The highest point in the immediate vicinity of OU 1 is Building 881, which is approximately six thousand feet above mean sea level. The lowest point is at Woman Creek, about 5,830 feet above mean sea level.

Surface Water

Rock Creek, North and South Walnut Creeks, and Woman Creek are intermittent streams that flow generally from west to east at Rocky Flats. Surface water within Woman Creek, which flows along the base of the Building 881 hillside south of OU 1, and which is not diverted to Mower Reservoir flows into Woman Creek Reservoir, which is part of the Standley Lake Protection Project. The water in Woman Creek Reservoir is detained and then pumped to Walnut Creek drainage downstream of Great Western Reservoir. The South Interceptor Ditch (SID) crosses OU 1 between the security area and Woman Creek.

Land Use

Land use within ten miles of Rocky Flats includes residential, commercial, industrial, parks and open space, agricultural and vacant, and institutional classifications. Most residential use within five miles of Rocky Flats is located northeast, cast and southeast of Rocky Flats. Commercial development is concentrated near residential developments north and southwest of Standley Lake and around Jefferson County Airport, located approximately three miles northeast of Rocky Flats. Industrial land use within five miles of the site is primarily quarrying and mining operations. Natural resources associated with the quarrying and mining activities include sand, gmvel and coal. Irrigated and non-irrigated croplands, producing primarily wheat and barley, are located north and northeast of Rocky Flats and in scattered parcels adjacent to the east boundary of the site. Several horse operations and small hay fields are located south of Rocky Flats. Much of the vacant land adjacent to Rocky Flats is rangeland.

OU 1
OU 1 is composed of eleven IHSSs, which are specific locations where solid wastes, hazardous substances, pollutants, contaminants, hazardous wastes, or hazardous

constituents may have been disposed or released to the environment within the Rocky Flats site at any time. Figure 2 shows the locations of these IHSSs and a description of each IHSS is provided in Table 1.

SITE HISTORY AND ENFORCEMENT ACTIVITIES

Rocky Flats is a government-owned, contractor operated facility that is part of the nationwide nuclear weapons complex. The site was operated for the U.S. Atomic Energy Commission (AEC) from its inception during 1951 until the AEC was dissolved in 1975. Responsibility for Rocky Flats was then assigned to the Energy Research and Development Administration (ERDA), which was succeeded by DOE in 1977. Until 1992 operations at Rocky Flats consisted of fabrication of nuclear weapons components from plutonium, uranium, stainless steel and beryllium. Building 881, which is adjacent to OU 1, was used for enriched uranium operations and stainless steel manufacturing. The laboratories in Building 881 also performed analyses of the materials generated in production. Parts made at the plant were shipped elsewhere for assembly. Support activities at Rocky Flats included chemical recovery and purification of recyclable transuranic radionuclides and research and development in metallurgy, machining, nondestructive testing, coatings, remote engineering, chemistry and physics. These activities resulted in the generation of radioactive, hazardous and mixed wastes. On-site storage and disposal of these wastes has contributed to hazardous and radioactive contamination in soils, surface water and groundwater. Originally the site was named the Rocky Flats Plant, but in 1994 it was renamed the Rocky Flats Environmental Technology Site to better reflect its new mission of environmental restoration and the advancement of new and innovative technologies for waste management, characterization and remediation.

On January 22, 1991, a Federal Facifity Agreement and Consent Order (i.e., the IAG) was signed by DOE, EPA and the State of Colorado. Within the IAG eleven IHSSs were assigned to OU 1: 102, 103, 104, 105.1, 105.2, 106, 107, 119.1, 119.2, 130 and 145 (see Table 1 for a description of these IHSSs and Figure 2 for the location of each MSS within OU 1). The IAG provided guidance and direction for investigating the OU 1 IHSSs. As per the IAG, draft and final Work Plans and a draft and final RCRA Facility Investigation/Remedial Investigation (RFI/RI) report were prepared and submitted to the regulatory agencies. The RFM report for OU 1 was prepared for submittal of documentation and data necessary to determine if the risk from the OU 1 IHSSs warrants the need for remedial action.

During 1992, as an interim action, a French Drain was constructed across a portion of OU 1 to protect Woman Creek from contaminated groundwater present in OU 1. The French Drain, along with an extraction well, collects contaminated groundwater moving towards Woman Creek. The collected groundwater is transported to an ultravioletthydrogen peroxide and ion-exchange water treatment system located in Building 89 1. In addition, during 1994, plutonium contaminated surface soil "hot spots" that were located in IHSSs 119.1 and 119.2 were removed from OU 1. This hot spot removal was conducted under an Accelerated Response Action per the IAG.

The Proposed Plan and Draft Modification of the Rocky Hats RCRA Permit for OU 1 (Proposed Plan) was prepared and released for public comment in May 1996 pursuant to the IAG and consistent with the draft RFCA. On July 19, 1996, DOE, EPA and the State of Colorado signed the final RFCA, which has replaced the IAG to become the governing cleanup agreement for Rocky Flats. Pursuant to the "Operable Unit Consolidation Plan" in RFCA, OU 1 will continue through the CAD/ROD process with EPA as the lead regulatory agency.

HIGHLIGHTS OF COMMUNITY PARTICIPATION

The first Final Phase III RFI/RI report for OU 1 was submitted to EPA and CDPHE in November 1993 and the Revised Final Phase III RFI/RI report was submitted in June 1994. The Proposed Plan for OU 1 was released to the public in May 1996, and was made available in both the administrative record and in information repositories maintained at Front Range Community College, the EPA Superfund Records Center, CDPHE, the Standley Lake Library and the Citizens Advisory Board. The notice of availability for this document was published in the Rocky Mountain News on May 13, 1996. A public comment period on the Proposed Plan was held from May 13 to July 12, 1996. A public hearing was held on June 19, 1996. At this hearing, representatives from DOE gave a presentation that summarized the contamination and risks at OU 1, as well as the preferred remedial alternative for OU 1. DOE also responded to questions about OU 1. In addition, public comments on the Proposed Plan and Draft Permit Modification were received and recorded during the public hearing. This record, as well as responses to the written comments received during the public comment period, is included in the Responsiveness Summary, which is part of this CAD/ROD. This decision document presents the selected remedial action for OU 1:881 Hillside Area at Rocky Flats, chosen in accordance with CERCLA, as amended by SARA and to the extent practicable, the NCP. The decision for OU 1 is based on the administrative record.

SCOPE AND ROLE OF OU 1

Because of the complexity of the Rocky Flats site, the site was divided into sixteen geographically defined OUs in the IAG. CAD/RODs have already been finalized and signed for three of these OUs (OU 11, OU 15 and OU 16). In all three cases a No Action decision was determined to be appropriate. Although many of the remaining thirteen OUs have been consolidated in RFCA, OU 1 remains as an individual operable unit. The selected remedial action presented in this CAD/ROD includes addressing subsurface soil contamination at IHSS 119.1, a former drum and scrap metal storage area. This action addresses the principal threat posed by OU 1 by excavating contamination sources in subsurface soils, thereby removing the current source of groundwater contamination, and by extracting and treating contaminated groundwater contained at IHSS 119.1. Based on the results of the final RFI/RI, DOE has determined that the remaining IHSSs within OU 1 are already in a protective state with regard to human health and the environment. Thus, no further action relative to these remaining IHSSs will be taken. Any surface soil contamination at OU 1 will be addressed jointly with surface soil contamination at the 903 Pad, Mound and East Trenches area (formerly OU 2, which has been consolidated into the Buffer Zone OU in RFCA). Any additional groundwater associated with OU 1 will be managed consistent with the Integrated Water Management Plan. Surface water and suspended sediments traiisported from OU 1 have historically flowed into Woman Creek or the South Interceptor Ditch (SID). Since Woman Creek and the SID are being evaluated as part of OU 5: Woman Creek Priority Drainage, surface water and associated sediments originating from OU 1 will be addressed as part of OU 5.

SUMMARY OF SITE CHARACTERISTICS

Geology

Geologic units present at the 881 Hillside Area include the Rocky Flats Alluvium at the top of the hillside, colluvium and artificial fill along central portions of the hillside, and Woman

Creek Valley Alluvium at the base. These thin (three to eighteen feet) Quaternary age surficial units are underlain by thick (six hundred to eight hundred feet) Cretaceous claystones, siltstones and sandstones of the Laramie Formation. The uppermost portion of the Laramie Formation is disturbed as a result of slumping on the hillside and also contains numerous fractures primarily due to weathering. This portion of the Laramie Formation is often referred to as the weathered claystone and may be up to twenty-five feet thick in some areas.

Surface Features/Surface Water Hydrology

Several erosional and depositional processes have combined to produce gently rolling to moderately steep slopes on the 881 Hillside. The terrain has been recontoured in several areas at various times during the construction of Building 881, the placement of fill and waste materials in several IHSSs, road grading, and the construction of the SID and French Drain.

Surface water primarily occurs at OU 1 following precipitation and snow melt events after the soils have become saturated due to infiltration. Surface runoff generally flows south, where it is intercepted by the SID, and subsequently flows to the C-2 Pond where it is batched and sampled before being pumped to the Walnut Creek drainage.

Hydrogeology

Groundwater occurs under unconfined conditions within the unconsolidated Rocky Flats Alluvium, colluvium, fill, and weathered claystone section of the Laramie Formation. This interval is designated as the Upper Hydrostratigraphic Unit (UHSU). Below this, groundwater is limited to the more porous beds within the Laramie Formation and is usually confined. This deeper section of strata is designated as the Lower Hydrostratigraphic Unit (LHSU).

UHSU groundwater is not present across the entire 881 Hillside (OU 1). Groundwater in the unconsolidated material typically is confined to northwest-southeast trending erosion incisions in the bedrock surface, referred to as paleochannels, which are masked by the overlying materials. The extent of groundwater within these paleochannels varies with seasonal changes in precipitation rates. UHSU groundwater also occurs sporadically within the upper portion of the Laramie formation within fractures and along slump block glide planes. As previously discussed, a French Drain was installed between the 881 Hillside and Woman Creek to intercept this shallow unconfined groundwater, and it extends to a maximum depth of twenty-eight feet below top of bedrock. The French Drain acts as an effective hydraulic barrier to horizontal migration of UHSU groundwater into Woman Creek.

Vertical migration between the UHSU and the LHSU is limited by the extremely low hydraulic conductivity of the claystones within the Laramie Formation. The hydraulic conductivity of these claystones (1 x l0-8 cm/sec) is approximately three orders of magnitude less than that of the overlying unconsolidated sediments (1 x 10-5 cm/sec), and as a result the vertical component of migration is extremely small compared to the horizontal component. In addition, the porous saturated sandstones of the LHSU are laterally discontinuous, with intervening claystone aquitards effectively limiting horizontal migration within the LHSU.

Recharge to the UHSU is minimal, and occurs primarily through infiltration of precipitation. Infiltration rates range from approximately two inches per hour for initial infiltration to as little as one half inch per hour for final (saturated) infiltration. Discharge occurs largely through evapotranspiration and surface discharge at seeps and into the SID. Total volumes of UHSU groundwater at OU 1 varies annually and seasonally, but the Final

Phase III RFI/RI report (June 1994) estimated the volume to be approximately 5.0 to 5.8 acre-feet.

Flora /Fauna

Grassland habitats are dominant at OU 1, representing about 82% of the total area. Nine percent is either developed or disturbed; marsh habitat occupies 4%; woodland habitat constitutes 4%; and shrub habitats account for the remaining 1%. A restored wetlands was created to mitigate damages resulting from installing the French Drain. Wildlife species are typical of those in similar habitats throughout the foothills area. As a result of limited ephemeral surface water, aquatic species with short life cycles and small habitats, such as benthic macroinvertebrates, have developed as opposed to fish populations.

Site Contamination

A detailed methodology was developed during the Phase III RFI/RI for determining the nature and extent of contamination at OU 1. Using this methodology, analytes within the following chemical classes were analyzed: volatile organic compounds (VOCs), semivolatile organic compounds (SVOCs), pesticides, polychlorinated biphenyls (PCBs), metals, and radionuclides. The following media were assessed for the presence of contamination: surface soil, subsurface soil, groundwater, surface water/seeps, and sediments. Based on this analysis, VOCs, SVOCs, metals, and radionuclides were identified as contaminants at OU 1 (see Table 2). Note that the data in Table 2 does not reflect the 1994 surface soil hotspot removal.

From this and other data collected, the Phase III RFI/RI concluded that in OU 1 only IHSS 119.1 contains a significant source of contamination in the subsurface soil. The primary contaminants identified at IHSS 119.1 are as follows: carbon tetrachloride; 1,1 - dichloroethene; tetrachloroethene; 1,1,1-trichloroediane; trichloroethene; and selenium. No radioactive contamination was identified in the subsurface soil at IHSS 119.1. Also, based on the data collected during the Phase III RFI/RI, the other IHSSs in OU 1 were not found to be contamination source areas and do not contribute significantly to groundwater contamination. Therefore, the other IHSSs do not warrant any further remedial action, and, as previously stated in the "Scope and Role of OU 1 " section of this CAD/ROD, the selected remedial action for OU 1 addresses subsurface soil contamination and groundwater contamination at IHSS 119.1.

Groundwater in OU 1 is contaminated by VOCs and metals (see Table 2). Releases of VOCs within IHSS 119.1 are presumed to have occurred in the form of dense non-aqueous phase liquids (DNAPLs). This conclusion is based on the fact that drums at this IHSS contained unknown quantities and types of solvents, coupled with the presence of chlorinated solvent concentrations in groundwater at levels approaching 7% of the solubility limits of the substances. The presence of mobile or residual DNAPL at this location is inferred only, since DNAPL has not been directly observed, and maximum measured concentrations of VOCs in subsurface soil is less than 2.0 mg/l. Table 3 lists monitoring wells in the vicinity of IHSS 119.1 and their contaminant concentration range for the Contaminants of Concern (COCs) for the years 1987 through 1995. The locations of these wells are shown on Figure 3. Only two of the wells (974 and 4387) have concentrations exceeding 1% of the compound solubility.

The lateral extent of groundwater contamination is generally limited to an area north of the SID. The occurrence of contaminants in LHSU groundwater is limited to relatively low levels of VOCs (less than 100 µg/1) and localized occurrences of metals, particularly selenium (concentrations ranging from below background to fifteen times the background level of 80 µg/l).

A soil gas survey was conducted during early 1996 to more accurately define the extent and

approximate volume of contaminated subsurface soil that will be excavated at IHSS 119.1. Based on this soil gas survey, two potential subsurface soil contamination source areas were identified (see Figure 3), resulting in an approximate total volume of subsurface soil to be excavated between one thousand and two thousand cubic yards.

Fate and Transport

In general, contaminant migration at the site was evaluated in terms of the identified pathways at OU 1. Migration of VOCs and metals in groundwater at IHSS 119.1 is restricted to northwest-southeast oriented channel features incised on the bedrock surface. The observed extent of groundwater contamination originating from IHSS 119. 1 was compared with the predicted extent to confirm the accuracy of the hydrogeologic conceptual model. Contaminant transport rates were estimated by calculating groundwater seepage velocity and contaminant-specific retardation factors (see Table 3). The observed migration distance of VOC and metal contamination originating from IHSS 119.1 (approximately three hundred feet) falls within the predicted range. After implementation of the subsurface soil removal action presented in this CAD/ROD, the present source of this groundwater contamination will be eliminated.

Radionuclides and SVOCs in surface soils are susceptible to redistribution by wind or surface water erosion events. Surface soils at OU 1 were contaminated with windblown low-level radionuclides transported from the 903 Pad area, and any remaining surface soil contamination will be addressed jointly with surface soil contamination at the 903 Pad area. Surface water is intercepted by the SID and will be addressed as part of OU 5.

SUMMARY OF SITE RISKS

As part of the Phase III RFI/RI conducted for OU 1, a Baseline Risk Assessment (BRA) was prepared to identify any current or potential future risks to human health and the environment. The BRA evaluated health risks from surface soil, subsurface soil, groundwater, surface water, and sediments within the OU 1 boundaries.

The surface soil hot spot removal action conducted at OU 1 for plutonium, americium and uranium contamination reduced the risk from this contaminant group and medium by 100 times. The risk from surface soils was reduced to 1 in 100,000 (10-5) after the OU 1 hot spot removal was completed. This contaminant group contributed the highest risk to a human receptor in the OU 1 BRA. With respect to subsurface soils and groundwater, the primary contaminants identified in the Phase III RFI/RI were: carbon tetrachloride; 1,1-dichloroethene; tetrachloroethene; 1,1,-trichloroethane; trichloroethene, and selenium.

The BRA identified potential health risks from these contaminants associated with current and possible future exposure scenarios at OU 1. The scenarios originally examined in the OU 1 BRA are as follows: current on-site commercial/industrial; current off-site residential; future on-site commercial/industrial; future on-site ecological reserve; and future on-site residential. However, not all of thew scenarios are considered valid or currently possible.

The Rocky Flats Future Site Use Working Group, consisting of participants from DOE, EPA, CDPHE, and major stakeholders, recommended in the June 1995 "Future Site Use Recommendations" report that the future on-site residential land use scenario not be considered. The commercial/industrial exposure scenario was recommended for use within the industrial area of the plant and the open space exposure scenario was recommended for the buffer zone. These recommendations are consistent with the conceptual land uses in the ALF and with the Rocky Flats Vision. The OU 1 area lies on the border between these two anticipated land uses. DOE has not yet made a final determination regarding the future land uses for OU 1. This determination will be consistent with RFCA and the Rocky Flats

Vision and will take into consideration the fact that the hillside at OU 1 has shown the potential for landslides and stumping. This would make the construction of structures at OU 1 complicated and problematic. In addition, as stated in the ALF, domestic use of groundwater will be prevented through institutional controls.

There are no health risks associated with the future open space park exposure scenario from OU 1 subsurface soil or groundwater since there are no exposure routes available from either medium. The carcinogenic risk calculated in the OU 1 BRA for the future on-site commercial/industrial worker in the industrial area from subsurface soils and groundwater is 2.4 x 10-4. This risk is slightly above EPA's acceptable risk range of 10-4 to 10-6.

The Phase III RFI/RI identified no significant environmental risk; therefore, environmental risks warrant no further examination.

In conclusion, actual or threatened releases of hazardou substances from this site, if not addressed by implementing the response action selected in this CAD/ROD, may present an imminent and substantial endangerment to public health, welfare, or the environment.

DESCRIPTION OF ALTERNATIVES

Six candidate remedial alternatives were compiled from the treatment technologies that passed a detailed screening process conducted during the Corrective Measures Study/Feasibility Study (CMS/FS), including the No Action alternative. A description of each remedial alternative is given below. The, six remedial alternatives are: No Action (Alternative 0), Institutional Controls with the French Drain (Alternative 1), Groundwater Pumping and Soil Vapor Extraction (Alternative 2), Groundwater Pumping and Soil Vapor Extraction with Thermal Enhancement (Alternative 3), Hot Air Injection with Mechanical Mixing (Alternative 4), and Soil Excavation with Groundwater Pumping (Alternative 5). For Alternatives 2, 3, 4 and 5, the volume of soil to be remediated was estimated, from the results of a recent soil gas survey performed at OU 1, to be between one thousand and two thousand cubic yards of soil (approximately a fifty feet by fifty feet by twelve feet deep excavation). During implementation of the remedy, confirmatory soil sampling will be performed to determine where the excavation can be terminated, based on cleanup levels identified in the ALF.

Alternative 0: No Action
The No Action alternative is required by CERCLA as a baseline alternative with which to compare other alternatives. The No Action alternative uses results of the Baseline Risk Assessment to define exposure levels to human and environmental receptors at the site under existing conditions, and specifically excludes remedial activities.

Use of the existing French Drain groundwater collection system would be discontinued under this alternative. Groundwater would, therefore, flow toward Woman Creek. The only activity associated with the No Action alternative is groundwater monitoring to detect changes in contaminant concentrations or migration patterns. Monitoring would begin immediately and would continue until a determination could be made that monitoring is no longer required. Existing wells no longer deemed necessary would be abandoned as appropriate.

No remedial time frame is established for this alternative since the alternative relies solely on natural contaminant degradation and attenuation processes to meet Remedial Action Objectives (RAOs). A thirty year monitoring time frame is assumed, in accordance with EPA guidance. It is estimated that it will cost approximately $1.9 million to implement this remedial alternative and continue monitoring groundwater for thirty years.

Alternative 1: Institutional Controls with the French Drain

Alternative 1 seeks to achieve RAOs by restricting access to wells impacted by OU 1 contaminants through institutional controls, while continuing to treat groundwater collected by the existing French Drain at the Building 891 water treatment system. Institutional controls would also be employed to prevent domestic groundwater use at OU 1. Further degradation of groundwater would be minimized by continued containment and treatment of the groundwater. Subsurface contamination sources would eventually be depleted by dissolution to groundwater, although the length of time for this to occur would be quite extensive.

The existing French Drain and Building 891 treatment system would continue to operate until no longer deemed necessary based on contaminant concentrations in the groundwater. Groundwater monitoring would continue for as long as required to verify that contaminant concentrations in groundwater have been permanently reduced below appropriate limits. Wells no longer deemed necessary for monitoring would be abandoned as appropriate.

No remediation time frame is defined for Alternative 1 since the French Drain system is currently operational and would continue to operate until acceptable contaminant concentrations are achieved. Based on current operations of the existing French Drain system, it is reasonable to assume that due to the slow groundwater collection rate, operation of the French Drain system would be required for an extensive period of time before RAOs are achieved. Experience with similar remedial actions at similar sites suggests that extremely long time frames are required for complete contaminant depletion. For the purpose of preparing a cost estimate, a thirty year time frame for remedial activities is assumed, based on EPA guidance. Based on this time frame, the estimated cost for completion of Alternative 1 is $17.5 million.

Alternalive 2: Groundwater Pumping and Soil Vapor Extraction

Alternative 2 seeks to achieve RAOs by dewatering the identified IHSS 119.1 source area using conventional pumping techniques, and by implementing a localized soil vapor extraction (SVE) system. Risk from contaminated groundwater would be eliminated by extraction and treatment, while further degradation of groundwater would be minimized by removal of contaminant sources through SVE.

SVE would enhance volatilization and subsequent contaminant recovery from saturated soils, unsaturated soils and groundwater at OU 1. SVE targets contaminants that have partitioned to the aqueous phase, have adsorbed onto subsurface soils, exist in a free phase or occupy soil pore spaces in a vapor phase. Discrete pools of groundwater located in IHSS 119.1 would be extracted via the existing French Drain and one to three additional recovery wells. Collected groundwater would be treated by the existing Building 891 water treatment system or other appropriate facility. These same areas, once desaturated, would be subjected to SVE to enhance the removal of any residual contaminants.

SVE can be significantly influenced by site geology and contaminant characteristics. Geological factors that can influence the success of SVE include depth to groundwater, subsurface soil/rock type and surface permeability. At OU 1, the subsurface soils contain large amounts of clay which would inhibit the effectiveness of this technology. Contaminants that are effectively recovered by SVE exhibit a vapor pressure of 1.0 mm of mercury or more at 20-degrees Celsius and which have a dimensionless Henry's Law constant greater than 0.01. The contaminants identified at OU 1 would be amenable to recovery by SVE.

It is also assumed that the vapor extraction wells in IHSS 119.1 would be approximately two to six inches in diameter. The wells would be operated cyclically to enhance recovery and would be used in combination with a granular activated carbon (GAC) unit to treat extracted vapors. The existing French Drain and Building 891 treatment system would

continue to operate during the remedial activities, but after remediation of the source is complete the French Drain would be decommissioned and groundwater collection and treatment would cease. Groundwater monitoring would be performed consistent with the Integrated Water Management Plan after completion of the remedial action.

The remediation time frame, which is considered to be the time until protection is achieved by the remedial action, is estimated to be approximately five years for Alternative 2. Based on this time frame and other technical information defining this alternative, the estimated cost for completion of Alternative 2 is $8.1 million.

Alternative 3: Groundwater Pumping and SVE with Thermal Enhancement
Alternative 3 seeks to achieve RAOs by combining SVE as described in Alternative 2 with thermal recovery enhancement techniques. Groundwater extraction and treatment would be employed to address groundwater contamination, while SVE with thermal enhancement would be used to remove contamination sources. This alternative considers two innovative treatment technologies that can effect an increase in subsurface soil temperatures and thus enhance SVE: radio frequency heating and electrical resistance (ohmic) heating. These technologies are discussed in detail in the OU 1 CMS/FS report. In general, these thermal enhancement techniques enhance the success of the SVE by increasing the temperature in the subsurface soil which allows more complete and faster volatilization, and thus recovery, of organic constituents in the soil. The increase in temperature of the subsurface soil also assists in dewatering the area by vaporizing pore space moisture.

As in Alternative 2, the existing French Drain and Building 891 treatment system would continue to operate until remediation of the contamination source is complete, at which time the French Drain would be decommissioned and groundwater collection and treatment would cease. Groundwater monitoring would be performed consistent with the Integrated Water Management Plan after completion of the remedial action.

The remediation time frame for Alternative 3 is estimated to be three years. Based on this time frame and other technical information defining this alternative, the estimated cost for completion of Alternative 3 is $7.5 million.

Allernative 4: Hot Air Injection with Mechanical Mixing
Alternative 4 seeks to achieve RAOs through an in-situ technology that combines hot air stripping with vigorous mixing of subsurface media. Contaminated groundwater at IHSS 119.1 would be remediated through extraction and treatment in the Building 891 facility, and the IHSS 119.1 subsurface soil contamination source would be addressed with hot air injection and mechanical mixing.

This technology operates under the same basic principles of SVE and thermal enhancement discussed previously, but combines these principles with vigorous mechanical mixing to increase the effectiveness of the subsurface soil treatment. The primary treatment system in this alternative would consist of a caterpillar mounted drill rig with specialized drilling equipment. The drill equipment is capable of delivering treatment reagents, such as hot air or steam, via piping in a hollow drill bit shaft that has mixing/cutting blades four to twelve feet in diameter.

Groundwater extraction wells would be placed in previously treated soil columns. Dewatering of a small area prior to treating the initial soil column would be accomplished via an extraction well drilled with conventional drilling equipment. Extracted groundwater would be treated in the existing Building 891 treatment system. The treatment columns, or

drill shafts, would overlap by thirty percent to ensure adequate treatment throughout the entire site. Four to six columns can be treated per day, depending on site conditions.

The existing French Drain and Building 891 treatment system would continue to operate during the remedial activities, but after rernediation of the source is complete the French Drain would be decommissioned and groundwater collection and treatment would cease. Groundwater monitoring would be performed consistent with the Integrated Water Management Plan after completion of the remedial action.

The remediation time frame for Alternative 4 is estimated to be two years. Based on this time frame and other technical information defining this alternative, the estimated cost for completion of Alternative 4 is $4.3 million.

Alternative 5: Soil Excavation with Groundwater Pumping
Alternative 5 is intended to achieve RAOs through excavation of contaminated subsurface soils and contaminated groundwater beneath IHSS 119.1. Based on the report of a recent soil gas survey that was performed at IHSS 119.1 ("Sampling and Analysis Report - Identification and Delineation of Contaminant Source Area for Excavation Design Purposes", April 1996), the estimated volume of soil that win be excavated from IHSS 119.1 is one thousand to two thousand cubic yards (approximately fifty feet by fifty feet by twelve feet deep).

Contaminated groundwater would be extracted from the excavation and treated in the Building 891 water treatment system. The excavated subsurface soils would either be treated on-site with a thermal desorption unit and returned to the excavation, disposed in an on-site disposal cell, or disposed off-site.

The existing French Drain and Building 891 treatment system would continue to operate during the remedial activities, but after remediation of the source is complete the French Drain would be decommissioned and groundwater collection and treatment would cease. Groundwater monitoring would be performed consistent with the Integrated Water Management Plan after completion of the remedial action.

The remediation time frame for Alternative 5 is estimated to be four to six months. Based on this time frame and other technical information defining this alternative, the estimated costs for completion of Alternative 5, depending on how the excavated soil is managed, is as follows: if the soil is treated on-site and returned to the excavation the cost is approximately $3.5 million; if the soil is disposed off-site the cost is approximately $3.9 million; and if the soil is disposed in an on-site disposal cell without treatment the cost is approximately $3.3 million.

SUMMARY OF THE COMPARATIVE ANALYSIS OF ALTERNATIVES

Threshold Criteria

Overall Protection of Human Health and the Environment: Alternative 5 provides the best overall protection of human health and the environment by providing the largest reduction in exposure potential within the shortest amount of time through removal of the contamination source. Alternatives 2, 3 and 4 provide the next best level of overall protection of human health and the environment, based on the fact that they are designed to reduce exposure potential through in place remediation of the contamination source at IHSS 119.1. However, these alternatives involve technologies that are not proven to be effective in the clay soils that are present at IHSS 119.1. Therefore, they would not be as thorough in removing the contamination source as Alternative 5, and they also involve longer

remediation timeframes. Alternative 1 protects human health and the environment by collecting and treating contaminated groundwater, as well as by implementing certain institutional controls to reduce exposure to die contaminants, but it does not address the contamination in the subsurface soil and, therefore, is not as protective as the previously discussed alternatives. Finally, Alternative 0 offers the least amount of protection to human health and the environment because it does not involve any source removal, containment or other controls.

Compliance with Appicable or Relevant and Appropriate Requirements (ARARs): The ARARs that have been identified and analyzed for each alternative for the contaminants of concern at IHSS 119.1 are as follows:

- Classifications and Numeric Standards (5 CCR 1002-8,3.8, So. Platte River Basin)
- Colorado Basic Standards for Surface Water (5 CCR 1002-8,3.1, Segment 4a of Big Dry Creek):

carbon tetrachloride	0.25 µg/L
1,1-dichloroethene	0.057 µg/L
tetrachloroethene	0.8 µg/L
1, 1, 1 -trichloroethane	200 µg/L
trichloroethene	2.7 µg/L
selenium	20 µg/L (acute); 5 µg/L (chronic)

- Colorado Hazardous Waste Regulations (6 CCR 1007-3 Parts 264 and 268)
- Colorado Air Pollution Control Regulations (5 CCR 1001-5, Regulation 7)
- Colorado Nongame, Endangered or Threatened Species Conservation Act (CRS 33-2-101).

The State contends that 5 CCR 1002-8, 3.12 (Site Specific Water Quality Classifications and Standards for Ground Water) and 5 CCR 1002-8, 3.11 (Basic Standards for Ground Water) are ARARs. DOE disagrees with this contention. Both parties reserve their respective rights to raise this issue and supporting arguments in any relevant forum. The parties do not anticipate that this disagreement will ripen into a formal dispute because 5 CCR 1002-8,3.12 adopts the standards set forth in 5 CCR 1002-8,3.1 and 3.8, and these standards are consistent with the enforceable standards set forth in the ALF. In addition, 5 CCR 1002-8,3.11 contains standards which are generally consistent with or less stringent than the standards set forth in 5 CCR 1002-8,3.1 and 3.8.

Alternatives 2,3,4 and 5 are expected to meet all of the above identified ARARs, while Alternatives 0 and 1 are expected to meet all ARARs except that they may not meet the Colorado Basic Standards for Surface Water. Therefore, Alternatives 0 and 1 rank low under this criterion.

Primary Balancing Criteria

Long-Term Effectiveness and Permanence: Alternative 5 provides the highest level of long-term effectiveness and permanence since it removes both groundwater contamination and subsurface soil contamination sources in IHSS 119.1, and thereby prevents any further contamination of groundwater. Alternatives 2,3 and 4 also remove groundwater contamination, but are not as effective at removing subsurface soil contamination sources because the technologies used in these alternatives have not been proven effective in the clay soils at IHSS 119.1. Alternative 1 provides even less long-term effectiveness and permanence since it only removes groundwater contarnination, but not subsurface soil contamination sources. Alternative 0 provides the lowest level of long-term effectiveness and permanence since it does not treat or remove any contamination at IHSS 119.1.

Reduction of Toxicity, Mobility, or Volume Through Treatment: Alternative 5 provides the highest reduction of mobility because it removes the primary source of contamination and treats contaminated groundwater, thereby preventing any further migration of contaminants. In addition, if the excavated soil is treated, as discussed in the "Description of Alternatives" section, Alternative 5 also provides the highest reduction of toxicity and volume through treatment. Alternatives 2,3 and 4 provide the next highest level of toxicity, mobility and volume reduction since they involve groundwater treatment as well as in place treatment of the subsurface sod contamination source. Alternative 1 provides less reduction of toxicity, mobility and volume through treatment because it treats only contaminated groundwater and does not address the subsurface soil contamination. Alternative 0 ranks lowest in this category because it treats neither groundwater nor subsurface soil contamination, and thus provides no reduction in toxicity, mobility or volume through treatment.

Short-Term Effectiveness: This criterion evaluates community, environmental and site worker protection during the implementation of the remedy. It also evaluates the effectiveness and reliability of protective measures during implementation and the time until RAOs are achieved.

Alternatives 0 and 1 rank highest under the community, environmental and site worker protection during implementation portion of this criterion because they involve no disturbance of the existing site and little or no worker involvement. Alternatives 2,3,4 and 5 involve some site disturbance, but the disturbance is not expected to create a significant impact on the community, the environment or site workers. Alternative 3 has the potential to present increased hazards to site workers due to the heating of the subsurface soil.

For the effectiveness and reliability of protective measures during implementation and for the time until RAOs are achieved, Alternative 5 ranks the highest. Excavation has been proven to be the most effective and reliable of the technologies presented here when applied to clay soils. In addition, DOE anticipates that it will take only four to six months for RAOs to be achieved once implementation of Alternative 5 has begun. The amount of time until RAOs are achieved for Alternatives 2, 3 and 4, once implementation of the alternative has begun, is five years, three years and two years, respectively. Alternatives 0 and 1 are the least effective and reliable since they do not address the subsurface soil contamination source. Also, the amount of time until RAOs are achieved for these two alternatives is unknown, but likely to be quite extensive, since they rely on natural degradation of the contaminants.

Implementability: This criterion evaluates the technical and administrative feasibility of implementing the alternatives including the availability of materials and services needed during implementation, as well as the ability to monitor the effectiveness of the remedy.

Alternative 1 is the most easily implementable because it represents the current condition at OU 1. The only additional work that it would involve would be to implement institutional controls at OU 1 and perform groundwater monitoring. Alternative 0 is the next most easily implementable alternative because it involves only decommissioning the French Drain and performing groundwater monitoring. Alternative 5 is the next most implementable alternative. Excavation has been proven to be effective and implementable in clay soils, and the equipment necessary to perform the excavation is readily available. Also, the effectiveness of Alternative 5 can be easily monitored.

Alternatives 2,3 and 4 use intrusive treatment methods that may pose technical problems, and are, therefore, less implementable than the other alternatives. For example, soil vapor extraction (Alternatives 2 and 3) cannot be reliably conducted in clay soils. Alternative 3 is even more difficult to implement than Alternative 2 because it is still an experimental technology. Alternative 4 is the most difficult option to implement because of the sloping, unstable hillside that the drill rig would have to work on, and because of the limited supply of the specialized equipment that is needed.

Cost: This criterion evaluates the capital cost for each alternative, long-term operation and maintenance (O&M) expenditures required to sustain it, and post-closure costs occurring after the completion of remediation. Future expenditures are adjusted to present worth amounts by discounting all costs to a common base year using present worth cost analysis.

Alternative 0 is the least costly since it involves only decommissioning the French Drain and performing groundwater monitoring for thirty years. The total estimated cost of Alternative 0 is $1.9 million. Alternative 5 is the next least costly alternative, with the following estimated costs of completion: $3.3 million if the excavated soil is placed directly into an on-site waste disposal cell, $3.5 million if the excavated soil is treated on-site with a thermal desorption unit and placed back into the original excavation, and $3.9 million if the excavated soil is disposed off-site. The cost estimates are based on an excavation volume of 1000 to 2000 cubic yards of soil (50 feet by 50 feet by 12 feet deep excavation), which was estimated as the appropriate soil excavation volume in the recent soil gas survey at IHSS 119.1. These cost estimates include all costs of soil excavation, handling and management of the soil, operation of the French Drain and groundwater treatment plant for one year (or until the soil has been excavated), and groundwater monitoring for thirty years.

Alternative 4 is more costly than Alternatives 0 and 5, with an estimated total cost of $4.3 million. This estimate is based on the same volume of soil as Alternative 5 (1000 to 2000 cubic yards), and includes all costs of performing the hot air injection and mechanical mixing, operation of the French Drain and groundwater treatment plant for two years, and groundwater monitoring for thirty years.

Alternative 3 is more costly than the previously discussed alternatives, with an estimated total cost of $7.5 million, which is also based on a soil volume of 1000 to 2000 cubic yards for treatment. This cost estimate includes all costs of performing the soil vapor extraction with thermal enhancement, operation of the French Drain and groundwater treatment plant for three years, and groundwater monitoring for thirty years. Alternative 2 is even more costly, with an estimated total cost of $8.1 million. Again, this cost estimate is based on a soil volume of 1000 to 2000 cubic yards for treatment. It includes all costs of performing the soil vapor extraction, operation of the French Drain and groundwater treatment plant for five years, and groundwater monitoring for thirty years.

Alternative 1 is the most expensive alternative, with an estimated total cost of $17.5 million, which is based on the long-term operation of the French Drain and the water treatment plant for thirty years and groundwater monitoring for thirty years.

Modifying Criteria

State Acceptance: This criterion addresses the State's comments and concerns regarding

the appropriateness of the selected remedy. The State of Colorado was represented on the Dispute Resolution Committee that selected the preferred remedial alternative for OU 1 and agrees with the selection. The State has no outstanding, significant comments or concerns with the selected remedy.

Community Acceptance: This criterion evaluates the selected remedy in terms of issues and concerns raised by the public through the public involvement process. At the public hearing for the OU 1 Proposed Plan on June 19, 1996, DOE received one comment from the public that was supportive of the preferred remedial alternative. During the public comment period for the OU 1 Proposed Plan, DOE received one set of written comments from the public, which, in general, expressed concern for funding and timing of the selected remedy, and requested clarification on several issues in the Proposed Plan. These comments are addressed in the attached Responsiveness Summary.

Anticipated Damages to Natural Resources: Alternatives 2, 3, 4 and 5 will not result in any irreversible damages to natural resources and will improve the quality of soil and groundwater by excavation and treatment. Alternative I will not result in any irreversible damages to natural resources and will improve the quality of groundwater by treatment. Alternative 0 will not result in any irreversible damages to natural resources, but will continue to degrade the quality of groundwater since the alternative does not involve any remedial activity. Measures to control and reduce the risk of damages to natural resources will be considered prior to beginning the remedial activity.

THE SELECTED REMEDY

The selected remedy for OU 1 includes three primary components:

1. Excavating subsurface soil contamination at IHSS 119.1, a former drum and scrap metal storage area, thereby removing the current source of groundwater contamination. The major components of the selected remedial action at IHSS 119.1, described in detail below, include:

    - Excavation of approximately one thousand to two thousand cubic yards of contaminated subsurface soils at IHSS 119.1;

    - Extraction and then ultraviolet/hydrogen peroxide and ion-exchange treatment of contaminated groundwater from the excavation; and

    - Either thermal treatment and replacement of excavated soil into the original excavation, disposal of excavated soil in an on-site waste disposal cell, or off-site disposal of excavated soil.

This portion of the selected remedy for OU 1 was chosen by the Dispute Resolution Committee (DRC)on August 25, 1995, as part of the dispute resolution process that is defined in the IAG, which was the governing cleanup agreement at the time of the decision. At that time, the DRC was composed of DOE's Assistant Manager for Environmental Restoration, EPA's Federal Facilities Branch Chief, and CDPHE's Program Manager for the Hazardous Waste Control Program. In choosing the remedial action for IHSS 119.1, the DRC was interested in controlling groundwater contamination through source removal. The DRC determined that Alternative 5, Soil Excavation with Groundwater Pumping, is the most appropriate remedial action for IHSS 119.1. This remedial action includes excavation of approximately one thousand to two thousand cubic yards of contaminated subsurface soils at IHSS 119. 1; extraction and then ultraviolet/hydrogen peroxide and ion-exchange treatment of contaminated groundwater at IHSS 119.1; either thermal treatment and replacement of excavated soil into the original excavation, disposal of excavated soil in an on-site waste disposal cell, or off-site disposal of the excavated soil; and groundwater monitoring consistent with

the Integrated Water Management Plan.

The comparative analysis of alternatives shows that Alternative 5 rates best for overall protection of human health and the environment; compliance with ARARs; long-term effectiveness and permanence; and reduction of toxicity, mobility, or volume through treatment. Alternative 5 rates higher than the other alternatives for short-term effectiveness, and rates good for implementability and anticipated damages to natural resources. Alternative 5 is expected to take the least amount of time to achieve protection at IHSS 119.1 (four to six months), and is the least expensive alternative except for Alternative 0, which is to perform no remedial action. In addition, Alternative 5 satisfies the CERCIA statutory preference for remedies that employ treatment as a principal element and achieves the Remedial Action Objectives set for OU 1.

The principal components of the IHSS 119.1 remedial action selected to meet these RAOs and remediation goals air, described below:

Excavation of soil: Excavation of contaminated subsurface soils will begin at IHSS 119.1 in the two contamination source areas identified during the recent soil gas survey. The location of these two areas can be found on Figure 3. From the soil gas survey results, it is estimated that the amount of soil that will be excavated is approximately one thousand to two thousand cubic yards. During the excavation, sampling will be performed to confirm the point at which all contaminated subsurface soil has been removed, in accordance with the ALF. In addition, during implementation of the selected remedy, DOE will perform confirmatory soil sampling downgradient of IHSS 119.1 to verify that a contamination source does not exist there. A detailed sampling and analysis plan for both of these confirmatory sampling activities will be prepared as part of the Remedial Design for OU 1. A detailed soil excavation plan will also be prepared as part of the Remedial Design.

Groundwater extraction and treatment: Groundwater will be extracted from the excavation and will be transferred to the existing Budding 891 ultraviolet/hydrogen peroxide and ion-exchange water treatment system for final treatment and discharge. After all contaminated subsurface soil has been excavated and all contaminated groundwater has been extracted from the excavation, the French Drain system will be decommissioned and its use will be discontinued. The final details of the groundwater extraction and the decommissioning of the French Drain will be presented in the Remedial Design for OU 1.

Handling and management of excavated soil: DOE is considering three options for managing the excavated soil: on-site treatment and placement back into the original excavation, disposal in an on-site waste disposal cell, or off-site disposal. DOE's preferred method of managing the excavated soil is to treat the soil on-site in a thermal desorption unit to levels that will be identified and approved in the Remedial Design. The treated soil would then be placed back into the original excavation. Again, the final details of how the excavated soil will be handled and managed will be prepared as part of the Remedial Design and will be in accordance with RFCA.

Groundwater monitoring: DOE anticipates that groundwater monitoring will be performed at IHSS 119.1, consistent with the Integrated Water Management Plan, after the remedial action is complete. The details of this groundwater monitoring will be presented in the Remedial Design.

It is possible that changes to the remedial activities described above may be made as a result of the remedial design and construction processes. Any such changes, in general, would reflect modifications resulting from the engineering design process.

2. Institutional controls will be maintained throughout the OU 1 area in a manner consistent with RFCA, the Rocky Flats Vision, and the ALF. These documents recognize that the reasonably foreseeable future land use for the OU 1 area is restricted open space. The institutional controls will ensure that the restricted open space land use is maintained for the OU 1 area and that domestic use of groundwater within the OU 1 area is prevented. If the reasonably foreseeable future land use for the OU 1 area changes when final sitewide land use decisions are made, this remedy will be reexamined to ensure protection of human health and the environment. The specific mechanisms (for example, deed restrictions) to ensure the implementation and continuity of the necessary institutional controls have not been included in this CAD/ROD. Currently, these mechanisms are envisioned to be placed in the Final Sitewide CAD/ROD or in this CAD/ROD during one of the five-year reviews of this document. However, should the Final CAD/ROD not occur or not include these institutional control mechanisms, this OU 1 CAD/ROD will be revised to include them, if it does not already include them as a result of a five-year review. The institutional controls can also be removed at one of the above times, if it is deemed appropriate to do so by the parties.

3. Because of the groundwater and land use controls, the low amounts of contamination in OU 1 outside of IHSS 119.1, and the low levels of risk associated with the contamination, no remedial action will be taken at the remaining ten IHSSs in OU 1.

Implementing the selected remedy will not result in any irreversible damages to natural resources. Wetlands will not be injured; flood elevations win not be affected; soil and groundwater will be temporarily disturbed during excavation activities, but will not be permanently impacted; and no permanent displacement or loss of wildlife will result from the implementation of the selected remedy.

The selected remedy will achieve the Remedial Action Objectives set for OU 1, which were identified in the CMS/FS report as follows:

- Prevent the inhalation of, ingestion of, and/or dermal contact with VOCs and inorganic contaminants in OU 1 groundwater that would result in a total excess cancer risk greater than 10-4 to 10-6 for carcinogens, and/or a Hazard Index greater than or equal to one for non-carcinogens.

- Prevent migration of contaminants from subsurface soils to groundwater that would result in groundwater contamination in excess of potential groundwater ARARs for OU 1 contamination.

- Prevent migration of contaminants in OU 1 groundwater from adversely impacting surface water quality in Woman Creek.

These RAOs were selected to address the primary risk exposure pathways identified for OU 1, which are groundwater and subsurface soil pathways. The preliminary remediation goals (PRGs) for these RAOs dealing with groundwater and subsurface soils were identified in the CMS/FS report by examining both risk-based and ARAR-based values. The exposure route of groundwater ingestion resulted in the highest potential risk to a future on-site resident, so the Colorado Basic Standards for Groundwater, found in 5 CCR 1002-8,3.11.5 and 3.11.6 were selected as appropriate PRGs for OU 1.

Subsequent to the selection of PRGs in the CMS/FS report, however, RFCA was finalized and is currently the governing cleanup agreement for Rocky Flats. The remediation goals in RFCA are based on the protection of surface water and are specified in the ALF.

Tberefore, the remediation goals for the contaminants at OU 1 are based on the ALF. RFCA also identifies points of compliance for all remedial activities conducted at Rocky Flats, which will be used for the remediation of OU 1.

DOCUMENTATION OF SIGNIFICANT CHANGES

The OU 1 Proposed Plan for Rocky Flats was released for public comment on May 13, 1996. The Proposed Plan identified Alternative 5, Soil Excavation with Groundwater Pumping, as the preferred remedial alternative. DOE reviewed all written and verbal comments submitted during the public comment period. Upon review of these comments, it was determined that no significant changes to the remedy, as it was originally identified in the Proposed Plan, were necessary.

RESPONSIVENESS SUMMARY

OVERVIEW

The Proposed Plan for OU 1 was available for public review and comment from May 13, 1996, through July 12, 1996. In addition, a public hearing was held on June 19, 1996, at which oral and written comments were solicited. This Responsiveness Summary provides a summary of the comments on the OU 1 Proposed Plan that were received during the public comment period, as well as DOE's responses to the public's concerns. All comments received during the public comment period were considered in the final selection of the remedial alternative for OU 1.

SUMMARY OF COMMENTS RECEIVED DURING PUBLIC COMMENT PERIOD AND DOE RESPONSES

DOE solicited written and oral comments from the public on the OU 1 Proposed Plan during the public comment period and at the public hearing. A summary of the comments that were received and DOE's responses are provided below:

Comment: A member of the community at the public hearing stated that the selection of the preferred remedial alternative was logical and looked like it would move Rocky Flats forward toward cleanup and closure.

Response: No response necessary.

Comment: A written comment was received that expressed concern over the apparent lack of funding for the implementation of the selected remedy, considering that the remediation of IHSS 119.1 is ranked number 12 on the Environmental Restoration (ER) Ranking in RFCA. The commenter was concerned that the remedial action must be conducted with fifteen months of completing the Remedial Investigation/Feasibility Study (RI/FS), according to CERCLA.

Response: First, while DOE is faced with significant budget cuts that will affect the activities that can be completed at Rocky Flats in FY97, final decisions on site priorities and funding for FY97 have not yet been made. The ER Ranking is intended to be a guide to funding and remediating the top priority IHSSs on-site, based on various factors including available funding, timing and project status. The IHSSs do not have to be remediated in the exact order that they appear on the ranking list. Therefore, DOE is not certain that this remedial action will not be funded in FY97. Second, the section of CERCLA quoted in the

written comment (CERCLA Section 120(e)(2)) refers to the entire site, not specifically to any particular operable Unit. In addition, cleanup at Rocky Flats has been governed by an enforceable agreement (first the IAG and now RFCA) since 1991. EPA has said that DOE is in compliance with CERCLA time frames as long as it is in compliance with this enforceable agreement. Therefore, the remedial action presented in this CAD/ROD does not have to be implemented within fifteen months of the final CAD/ROD.

Comment: A written comment was received that expressed concern over the management of the excavated soils in Alternative 5. Because three options were listed for the management of the soils, the commenter was concerned that a complete evaluation of the

alternatives could not have been accomplished. Also, the commenter questioned the option of on-site disposal of the excavated soil and stated that more detail should be given on the management of the excavated soil.

Response: Although three options are presented in the Proposed Plan for managing the excavated soil, the fundamentals of Alternative 5, as compared to the other alternatives under the nine criteria required by CERCLA, are the same under each option, and the comparison results are also the same. For example, regardless of the method of handling the excavated soil, provided it is in compliance with all applicable laws and regulations, Alternative 5 is still overall the most protective of human health and the environment, based on the removal of the contamination source in the subsurface soil. The evaluation of alternatives was not dependent on the method of managing the excavated soil to show that Alternative 5 is the most appropriate alternative. In addition, separate cost estimates were provided in the Proposed Plan for each different option of soil management under Alternative 5. In all three cases Alternative 5 is the least expensive alternative, other than the No Action alternative.

The intent of the on-site disposal option for the excavated soil is to dispose of the soil in a permitted on-site waste disposal cell, if such a unit exists on-site at the time that this remedial action is performed. Both the disposal unit and the soil would meet all applicable requirements before on-site disposal would occur. If such a disposal unit does not exist on-site, one of the other two options will be employed. As stated in the CAD/ROD, it is currently DOE's preference to treat the excavated soil on-site in a thermal desorption unit and place it back into the excavation, provided that the treated soil meets soil put-back requirements established by RFCA. The details for managing the excavated soil, including necessary treatment, required permits, and applicable laws and regulations, will be included in the Remedial Design, along with all of the details of implementing the selected remedy.

Comment: A written comment was received that questioned whether a health assessment by the Agency for Toxic Substances and Disease Registry (ATSDR) has been or will be performed at Rocky Flats.

Response: A health assessment by ATSDR is scheduled for Rocky Flats by the year 2002. This is based on available resources at (ATSDR) and the prioritized needs of the whole DOE complex for health assessments to be performed. DOE is using the results of the Baseline Risk Assessment for OU 1, which includes a Public Health Evaluation and an Environmental Evaluation, to move forward with this remedial action.

Comment: Written comments were received that expressed concern over vague language in the Proposed Plan regarding the conclusions in the RFM on the extent of contamination and the need for remedial action at OU 1.

Response: The RFM report, which is available for review in the Administrative Record and public reading rooms, does definitively determine the need for further remedial action at each IHSS in OU 1 and presents in detail the infonnation used to make those determinations. The RFI/RI concluded that only IHSS 119.1 contributes significantly to groundwater contamination and contains subsurface soil contamination at levels that warrant a remedial action. Based on the data contained in the report, the RFI/RI also concluded that the remainder of the IHSSs at OU 1 are already in a protective state (i.e., do not contribute significantly to groundwater contamination and do not contain contamination at levels that warrant a remedial action). Due to the limited scope of the Proposed Plan, a summary of these conclusions and data was presented and references were made to the RFI/RI in the Proposed Plan, rather than repeat in detail the information already presented in the RFI/RI report. For the characterization of IHSS 104, the Proposed Plan only referred to a review of documentation. However, conclusions on the characterization of IHSS 104 were also based on investigation data, as presented in the RFI/RI report.

Comment: A written comment was received that expressed concern over the requirement in the IAG to incorporate actions that are completed pursuant to CERCLA authority into the Rocky Flats RCRA permit.

Response: RFCA now requires that CDPHE incorporate only final corrective action decisions into the Rocky Flats RCRA permit in order to satisfy the requirement to include a corrective action element in the permit. In addition, RFCA states that activities required under any concurrence CAD/ROD (where both EPA and CDPHE concur with the CAD/ROD) will not require permits.

Comment: Written comments were received that questioned whether RCRA listed hazardous wastes were disposed at OU 1, based on the contaminants of concern that were identified in the Proposed Plan. The commenter questioned whether the excavated soil should be handled as a RCRA listed hazardous waste.

Response: Based on the RFM, DOE does not have any information to indicate that spent solvents, which would have been RCRA listed hazardous wastes, were disposed at OU 1. Rather, the VOCs listed in the Proposed Plan were identified as contaminants of concern based on sampling and analysis of the groundwater and soil that was conducted at OU 1 during the RFM. DOE cannot conclusively say that these VOC contaminants are the result of the disposal of spent solvents (i.e., RCRA listed hazardous waste), therefore, the RCRA hazardous waste listing does not apply to the contaminants, and the soil does not contain a listed hazardous waste.

The Remedial Design will describe in detail how the excavated soil will be managed. At this point, it is anticipated that the excavated soil, which itself is not a waste, would be considered environmental media containing hazardous constituents that exhibit a hazardous waste characteristic for VOCs. The excavated sod would be treated in a thermal desorption unit. Following this treatment, the soil would be sampled and analyzed to verify the successful removal of VOCs from the excavated soil. At that point, the excavated soil would no longer contain hazardous constituents that exhibit a hazardous waste characteristic. Therefore, land disposal restrictions (LDR) and minimum technological requirements (MTR) would not apply to the excavated soils.

Comment: A written question was received concerning the levels of radioactivity that must be met before placement of soils contaminated with radionuclides is allowed.

Response: Information from the RFLRI for OU 1 indicates that radionuclide contamination is not expected in the subsurface soils at OU 1. However, as required by RFCA, a working group consisting of representatives from DOE, EPA and the State of

Colorado are working on developing site specific radionuclide clean-up and put-back levels for soil. The proposal by this working group will be available for public comment from September 1, 1996, through October 4, 1996. A final decision on this issue is expected to be made by October 18, 1996.

<IMG SRC 97195C>

<IMG SRC 97195 D>

<IMG SRC 97195 E>

Table 1 Individual Hazardous Substance Site Descriptions

IHSS Number	IHSS Name	Description
102	Oil Sludge Pit Site	Approximately 40 x 70 ft². area located approximately 190 feet south of Building 881 where 30 to 50 drums of non-radioactive oily suldge were emptied in the late 1950s. The sludge was from the cleaning of two No.6 fuel oil tanks, designed as IHSSs 105.1 and 105.2, and was backfilled when disposal operations ceased
103	Chemical Burial Site	Approximately 50 feet in diameter (2,000 ft².), the pit is circular is shape, and is located approximately 150 feet southeast of Building 891 on 1963 serial photographs. Area was reportedly used to bury unknown chemicals.
104	Liquid Dumping Site	Reportedly a former (pro-1969)liquid waste disposal pond in area cast of Building 881 - no exact location or dimensions of pit - location is uncertain due to poor quality of 1965 aerial photograph. Approximate dimensions are 50 x 50 ft².
105.1. 105.2	Out-of-Service Fuel tanks	Located immediately south of Building 881, these were storage tanks for No. 6 fuel oil. Suspected leaks in 1972. Tanks closed in place through filling with asbestos-containing

	Oil Tank Sites	material and cement. IHSS 107, the Hillside Oil Leak Site, may have been caused by leakage from these tanks.
106	Outfall Site	Overflow line from the sanitary sewer sump in Building 887. The outfall was used for discharge of untreated sanitary wastes in the 1950s and 1960s. Due to concern about discharges from the outfit entering Woman Creek, several small retention ponds and an interceptor ditch were built in 1955 and 1979, respectively, to divert the outfill water to Pond C-2.
107	Hillside Oil Leak Site	Site of 1972 fuel oil spill Erom Building 881 foundation drain outfall. A concrete skimming pond was built below the foundation drain outfall to contain the oil flowing from the foundation drain, and an interceptor ditch was constructed to prevent oil-contaminated water from reaching Woman Creek.
119.1. 119.2	Multiple Solvent Spill Sites	Former drum storage areas cast of Building 881 along the southern perimeter road. IHSS 119.1 is the larger western drum and scrap metal storage area, and appears to have contained mostly drums in the southern part of the IHSS and mostly scrap metal in the northern part. although material was moved around frequently as documented by aerial photographs. IHSS 119.2 is the smaller eastern drum and scrap metal storage area and appears to have contained mostly scrap metal. The drums contained unknown quantities and types of solvents and wastes. The scrap metal may have been coated with residual oils and/or hydraulic coolants.
130	Radioactive Site - 800 Area # 1	Area east of Building 881. Used between 1969 and 1972 to dispose of soil and asphalt contaminated with low levels of plutonium and uranium. IHSS 130 is referred to as the Contaminated Soil Disposal Area Fast of Building 881 in the HRR to better match the history of waste disposal; the site is included in the discussion of the 900 area at RFETS in that report. IHSS 130 contains approximately 320 tons or 250 cubic yards which came from three sources: 1) plutonium-contaminated sod and asphalt, placed in September of 1969, 2) road asphalt and roil rad contaminated by leaking drum in transit and 3) 60 cu. yds. of plutonuim contaminated soil removed from around the Building 774 process waste tanks in 1972.
145	Sanitary Waste Line Leak	Six-inch cast-iron sanitary sewer line that originates at the Building 887 lift station and that leaked on the hillside south of Building 881. The line had conveyed sanitary wastes and low level radioactive laundry effluent to the sanitary treatment plant from about 1969 to 1973.

Table 2: Summary of Contaminants at OU1

	Surface Soil	Subsurface Soil	Groundwater	Surface Water/ Seeps	Sediments
Inorganic Analytes					
Selenium			X		
Vanadium			X		
Plutonium	X*	X*		X**	X**
Americium	X	X*		X**	X**
Uranium	X*	X*			
Volatile Organic Compounds					
1,1,1-Trichloroedtane		X	X	X	X
Trichloroethene		X	X	X	
Tetrachloroethene		X	X	X	
Carbon Tetrachloride		X	X		
1,2-Dichloroethane		X	X	X	
Chloroform		X	X		
1,1 -Dichloroethenc		X	X	X	
1,2-Dichloroethene			X	X	
cis- 1,2-Dichloroethene			X		
1,1,2-Trichloroedmm			X		
1,1-Dichloroethane			X	X	
Toluene					
Total Xylenes			X	X	X
Semivolatile Organic Compounds					
Polynuclear Aromatic Hydrocarbons	X	X			X
Aroclor- 1254	X				X
Aroclor-1248	X				

* Presence in these media is based on hot spot data.

** Presumed to be present as a contaminant of these media because of the widespread nature of the contamination originating from an off-site source.

Table 3: Summary of VOC Concentrations in Groundwater, IHSS 119.1, 1987-1995

Well No.	Compound	Range of Concentrations (ug/L)
0974	CCL -4	5U - 2,800
	1,1-DCE	500U - 48,000
	TCA	1,220 - 30,250

	PCE	430 - 13,200
	TCE	1,500 - 72,000
1074	CCL -4	2,500E - 5,000
	1,1-DCE	42J - 120
	TCA	50U - 390
	PCE	100U - 49
	TCE	790 - 3,600
0487	CCL -4	46 - 2,600
	1,1-DCE	2U - 12
	TCA	3.2 - 20
	PCE	14 - 590
	TCE	220 - 9,500
4387	CCL -4	40U - 2,100
	1,1-DCE	1,400 - 11,000
	TCA	1,700 - 20,000
	PCE	61 - 7,590
	TCE	100 - 15,540
37891	CCL -4	0.2U
	1,1-DCE	0.2U
	TCA	0.1U
	PCE	0.1U - 7.1B
	TCE	0.1U - 1.3
37991	CCL -4	0.lU - 0.2
	1,1-DCE	0.2U
	TCA	0.1U
	PCE	0.1U - 16
	TCE	0.1U - 3.3
32591	CCL -4	0.1
	1,1-DCE	0.68 - 6
	TCA	0.4 - 2
	PCE	1 - 3
	TCE	5U - 1100

Note: Well 0587 had 12 ug/L TCE on (8/92), well 33491 had I ug/L TCE (11/94), and wells 33691, and 38291 were not sampled. U=not detected at or above method detection limit. B=appeared in method blank. E=estimated value, and J=estimated value

Summary of VOC Physical Characteristics

Compound	Solubility (mg/L)	Specific Density (20°) (g/cc)	Log Octanol Water Coefficient	Henry's Law Constant (atm-m3/mol)
CCL4	800	1.59	2.83	0.0302
1,1-DCE	400	1.22	2.13	0.021
TCA	1360	1.34	2.47	0.018
PCE	150	1.62	2.60	0.0153
TCE	1100	1.46	2.53	0.0091

Compiled from Cohen, R.M.. Mercer, J.W., and Mathews, J., 1993. DNAPL Site Evaluation: C.K. Smoley, Publisher.

<IMG SRC 97195F>

Department of Energy

ROCKY FLATS FIELD OFFICE
P.O. BOX 928
GOLDEN, COLORADO 80402-0928

97-DOE-05168

Mr. Tim Rehder, Manager
Rocky Flats Project
U.S. Environmental Protection Agency, Region VIII
999 18th Street, Suite 500
Denver, Colorado 80202-2466

Mr. Joseph Schieffelin, Permitting and Compliance Unit Leader
Federal Facilities Program
Hazardous Materials and Waste Management Division
Colorado Department of Public Health and Environment
4300 Cherry Creek Drive South
Denver, Colorado 80222-1530

Dear Mr. Rehder and Mr. Schieffelin:

Enclosed is a copy of the final Corrective Action Decision/Record of Decision for Operable Unit 1, 881 Hillside, including the signatures of all parties, for your records. Thank you for your cooperation during the finalization of this important decision document.

If you have any questions, please contact Sandi MacLeod at 966-3367.

<IMG SRC 97195G>

Enclosure

cc w/Enc:
G. Kleeman, EPA
C. Spreng, CDPHE
Administrative Record

cc w/o Enc:
J. Legare, AMEC, RFFO
S. MacLeod, ERWM, RFFO
N. Castaneda, ERWM, RFFO
J. Rampe, PLD, RFFO
T. Howell, OCC, RFFO
A. Sieben, KH

ROCKY FLATS PLANT (USDOE)

Site Information:

Site Name: ROCKY FLATS PLANT (USDOE)
Address: GOLDEN, CO

EPA ID: CO7890010526
EPA Region: 08

Record of Decision (ROD):

ROD Date: 06/03/1997
Operable Unit: 03
ROD ID: EPA/541/R-97/196

Media: Surface water,soils,surface soils,sediment

Contaminant: Plutonium, uranium, beryllium, lathe coolants, radionuclides

Abstract: The Rocky Flats Environmental Technology Site (RFETS) is a government-owned, contractor-operated facility that is part of the nationwide nuclear weapons manufacturing complex. RFETS began operation in 1951 under the Atomic Energy Commission, until it was dissolved in 1975. Prior to 1992, RFETS engaged in the production of nuclear and non-nuclear components of atomic weapons, using plutonium, uranium, beryllium and stainless steel as the primary materials.RFETS is located about 16 miles northwest of downtown Denver, Colorado, in northernmost Jefferson County, west of the Cities of Broomfield and Westminster, Colorado. RFETS occupies approximately 6,535 acres of land owned by the federal government. Most of this land is vacant buffer zone surrounding a 385-acre industrial area, where most buildings and other structures are located, and where manufacturing activities at RFETS historically took place.Portions of Operable Unit (OU) 3 contain low-level deposits of radionuclides, primarily as a result of accidental releases from RFETS in the past. Migration via wind-borne dispersal or surface water runoff from the RFETS 903 Pad area is a likely source for some of the observed radionuclides in the OU 3 Individual Hazardous Substance Sites (IHSS's). The deposits of radionuclides at the 903 Pad, located near the RFETS inner east gate, resulted from the storage of numerous 55-gallon drums containing lathe coolants and plutonium. These drums were stored at the 903 Pad from 1958 to 1968, during which time the drums corroded and the lathe coolant

and plutonium leaked onto surrounding soils.Reconstruction of the RFETS surface water holding ponds between 1970 and 1973 is also a primary source of some of the deposits of radionuclides observed in IHSS 200. Prior to 1979, process wastewater from decontamination operations and the laundry plant effluent were channeled through a series of ponds located along the South Walnut Creek, before the stream left RFETS and entered Great Western Reservoir. The holding pond reconstruction may have resulted in the resuspension of sediments containing radionuclides that were ultimately transported downstream into Great Western Reservoir.

Remedy: The selected remedy for OU 3 is no action. Based upon the Baseline Risk Assessment and the Environmental Risk Assessment, it has been determined that no action is needed for OU 3. The RFI/RI Report concludes that all IHSS's within OU 3 are already in a state protective of human health and the environment. Therefore, no remedial action regarding OU 3 or any of its constituent IHSS's is warranted.

Text: Full-text ROD document follows on next page.

<IMG 971960>

CORRECTIVE ACTION DECISION/ RECORD OF DECISION

OPERABLE UNIT 3
THE OFFSITE AREAS
Rocky Flats Environmental Technology Site

Prepared by:
U.S. Department of Energy
Rocky Flats Field Office
Golden, Colorado

April 1997

CORRECTIVE ACTION DECISION/RECORD OF DECISION DECLARATION

SITE NAME AND LOCATION
Rocky Flats Environmental Technology Site, Operable Unit 3: Offsite Areas, Jefferson County, Colorado.

STATEMENT OF BASIS AND PURPOSE
This decision document presents the selected remedial action/corrective action for the Rocky Flats Environmental Technology Site (RFETS) Operable Unit (OU) 3: Offsite Areas, located near Broomfield and Westminster, Colorado. The selected remedy was chosen in accordance with the Comprehensive Environmental Response, Compensation and Liability Act (CERCLA) of 1980, as amended by the Superfund Amendments and Reauthorization Act of 1986. The selected remedy was also chosen in accordance with the Colorado Hazardous Waste Act (CHWA). The Resource Conservation and Recovery Act (RCRA) is administered in Colorado through the CHWA, by the Colorado Department of Public Health and Environment (CDPHE). To the extent practicable, the selected remedy is also consistent with the National Oil and Hazardous Substances Pollution Contingency Plan (NCP).

OU 3 was investigated and a remedy was selected in compliance with the Federal Facility Agreement and Consent Order - Interagency Agreement (IAG), signed by the U.S. Department of Energy (DOE), the State of Colorado and the U.S. Environmental Protection Agency (EPA) on January 22, 1991. The selected remedy is also consistent with the Federal Facility Agreement and Consent Order - Rocky Flats Cleanup Agreement (RFCA), signed by DOE, the State of Colorado and EPA on July 19, 1996. RFCA now governs cleanup at Rocky Flats. The remedy selection is based on the administrative record for OU 3, and CDPHE and the EPA agree with the remedy selected.

OU 3 is one of sixteen OU's at Rocky Flats originally identified in the IAG, and is the only one not located within the RFETS boundaries. The RFCA consolidated many of the

original sixteen OU's, but OU 3 remained separate, owing both to its unique geographic location and to the fact that investigations and administrative activity for OU 3 were nearly completed when RFCA was signed. OU 3 is comprised of four Individual Hazardous Substance Sites (IHSS's): Contamination of the Land Surface (IHSS 199), Great Western Reservoir (IHSS 200), Standley Lake (IHSS 201) and Mower Reservoir (IHSS 202).

DESCRIPTION OF THE SELECTED REMEDY

The selected remedy for OU 3 is no action. Based upon the Baseline Risk Assessment and the Environmental Risk Assessment contained in the RCRA Facility Investigation/Remedial Investigation (RFI/RI) Report of June 1996, DOE, the lead agency under CERCLA for OU 3, concludes that no action is appropriate for OU 3. The RFI/RI Report concludes that all IHSS's within OU 3 are already in a state protective of human health and the environment. The NCP provides for the selection of a no action remedy when an OU is in such a protective state. Therefore, no remedial action regarding OU 3 or any of its constituent IHSS's is warranted.

DECLARATION STATEMENT

DOE, in consultation with CDPHE and EPA, has determined that no remedial action is necessary for OU 3 to be protective of human health and the environment. No hazardous substances, pollutants or contaminants will remain within the boundaries of OU 3 above levels that allow for unlimited use and unrestricted exposure, as these levels have been calculated in the OU 3 RFI/RI Report. Since no national health-based standards have been

promulgated for the radioactive contaminants remaining in OU 3, this Corrective Action Decision/Record of Decision will be reviewed in five years, consistent with CERCLA Section 121(c), to ensure consistency with such a national standard, if one is later promulgated. Since the conclusions contained in this Corrective Action Decision/Record of Decision are in part dependent upon calculated radiation exposure levels, the Corrective Action Decision/Record of Decision will additionally be reviewed if necessary, consistent with CERCLA Section 121(c), to ensure consistency with any revisions to those calculated levels that may result from new regulations, or improved calculation methods or modelling parameters.

<IMG 97196A>

<IMG 97196B>

DECISION SUMMARY

Site Name, Location and Description

Rocky Flats Environmental Technology Site

The Rocky Flats Environmental Technology Site (RFETS) is located about sixteen miles northwest of downtown Denver, Colorado, in northernmost Jefferson County, west of the Cities of Broomfield and Westminster, Colorado (Figure 1). RFETS occupies approximately 6,535 acres of land owned by the federal government. Most of this land (~6,100 acres) is vacant buffer zone surrounding a 385-acre industrial area where most

buildings and other structures are located, and where manufacturing activities at RFETS historically took place.

RFETS is located along the eastern edge of the southern Rocky Mountains, immediately east of the Colorado Front Range. The site is located on a broad, eastward-sloping pediment capped by Quaternary alluvial deposits known as the Rocky Flats Alluvium. The pediment surface is dissected by several east to northeast trending stream valleys, the bases of which lie up to two hundred feet below the top of the older pediment surface. In places, these valleys cut into the underlying bedrock, but in most places the bedrock is hidden beneath colluvium that has collected along the valley slopes. RFETS elevations range from about 5,800 feet to about 6,000 feet above mean sea level.

The main surface water features at RFETS are Rock Creek, North and South Walnut Creeks, and Woman Creek. These creeks are ephemeral/intermittent in nature, except in reaches of Walnut Creek that receive discharges from the RFETS sewage treatment plant. North and South Walnut Creeks and Woman Creek are impounded in places along their lengths by three series of holding ponds (the A-, B-, and C-series ponds, respectively). The purpose of these ponds is to retain water in the event of an industrial discharge from RFETS. Water from Pond C-2, located in the Woman Creek drainage and which drains water from the 881 Hillside south of the industrial area, was pumped to the Walnut Creek diversion ditch and routed around Great Western Reservoir. Following completion of the Standley Lake Protection Project, C-2 water is now released directly to Woman Creek.

Land use within ten miles of RFETS (including Operable Unit 3) includes residential, agricultural, industrial, parks and open space, vacant and institutional classifications. Most residential use is located northeast, east and southeast of RFETS. Commercial development occurs near Jefferson County Airport, located about three miles northeast of RFETS, and north and southwest of Standley Lake. Quarrying and mining for sand, gravel and coal take place on RFETS or within five miles of the site. Irrigated and non-irrigated croplands, producing primarily winter wheat and barley, are located primarily northeast and southeast of the site. Much of the vacant land around RFETS is rangeland.

Operable Unit 3

Operable Unit 3 (OU 3) is composed of four Individual Hazardous Substance Sites, or IHSS's. IHSS's are specific locations where hazardous substances, solid wastes, pollutants, contaminants, hazardous wastes or hazardous constituents may have been disposed of or released to the environment from Rocky Flats at any time in the past. The four IHSS's that comprise OU 3 are: IHSS 199, Contamination of the Land Surface; IHSS 200, Great Western Reservoir; IHSS 201, Standley Lake; and IHSS 202, Mower Reservoir. Their locations are shown in Figure 1.

Site History and Enforcement Activities

The Rocky Flats Environmental Technology Site (RFETS) is a government-owned, contractor operated facility that is part of the nationwide nuclear weapons manufacturing complex. RFETS began operation in 1951 under the Atomic Energy Commission, until it was dissolved in 1975. The Energy Research and Development Agency assumed responsibility for Rocky Flats until 1977, when the Department of Energy was created. Prior to 1992, RFETS engaged in the production of nuclear and non-nuclear components of atomic weapons, using plutonium, uranium, beryllium and stainless steel as the primary materials. In 1992, the nuclear production mission was suspended, and by 1995, all production at RFETS had ceased. RFETS has been rededicated to a mission of environmental cleanup and safe management of nuclear materials remaining on site.

Portions of OU 3, primarily as a result of accidental releases from RFETS in the past, contain low-level deposits of radionuclides. Migration via wind-borne dispersal or surface water runoff from the RFETS 903 Pad area is a likely source for some of the observed radionuclides in the OU 3 IHSS's. The deposits of radionuclides at the 903 Pad, located near the RFETS inner east gate, resulted from the storage of numerous 55-gallon drums containing lathe coolants and plutonium. These drums were stored at the 903 Pad from 1958 to 1968, during which time the drums corroded and the lathe coolant and plutonium leaked onto surrounding soils. The drums and surrounding surface soil were removed from the 903 Pad area in 1969 and an asphalt cap was subsequently placed over the entire 903 Pad area.

Reconstruction of the RFETS surface water holding ponds between 1970 and 1973 is also a primary source for some of the deposits of radionuclides observed in IHSS 200. Prior to 1979, process wastewater from decontamination operations and the laundry plant effluent were channeled through a series of ponds located along South Walnut Creek, before the stream left RFETS and entered Great Western Reservoir. The holding pond reconstruction may have resulted in the resuspension of sediments containing radionuclides that were ultimately transported downstream into Great Western Reservoir.

Other potential sources of radionuclides were considered in the RFI/RI Report, and by previous researchers, but are probably less significant than the two aforementioned sources. These other sources include possible low-level air emissions during the early years of Plant operation, a fire in Building 771 on September 11, 1957; and a fire in Building 776 on May 11, 1969.

In 1975, suit was filed naming former RFETS contractors Rockwell International and Dow Chemical Company and the United States as defendants in an action claiming that land immediately east of RFETS (land east of Indiana Street that is within the geographic area of OU 3) had been damaged by the release of radionuclides from RFETS. The suit was settled in December 1984. As part of the settlement, Jefferson County acquired 250 acres of the land in question and the City of Broomfield acquired 100 acres. The City of Westminster has subsequently acquired Jefferson County's interest in the land. The settlement also called for the land in question (known as the "Remedy Lands") to be tilled and then revegetated by seeding in an effort to reduce the surface concentrations of radionuclides. Tilling did successfully reduce the surface concentrations of radionuclides, but revegetation has proven difficult. There have been no other requests to till and revegetate the land since Jefferson County's 1986 request.

On January 22, 1991, the Department of Energy, the U.S. Environmental Protection Agency and the Colorado Department of Health signed the Federal Facility Agreement and Consent Order, also known as the Interagency Agreement or IAG. The IAG divided

RFETS and the surrounding lands into sixteen OU's, and specified that OU 3 be divided into the four IHSS's shown in Table 1. OU 3 was investigated pursuant to the guidance set forth in the IAG, and the RCRA Facility Investigation/Remedial Investigation (RFI/RI) Report was released in August 1996.

On July 19,1996, DOE, EPA and CDPHE signed the Rocky Flats Cleanup Agreement (RFCA), which superseded the IAG. RFCA consolidated many of the OU's at RFETS into two larger OU's: the Buffer Zone and the Industrial Area. OU 3 remained separate under RFCA, owing both to its unique geographic location and to the fact that investigations and administrative actions at OU 3 had been nearly completed at the time RFCA was signed.

Highlights of Community Participation

DOE submitted the final RFI/RI Report for OU 3 to EPA on July 11, 1996, following

resolution of final comments by EPA, CDPHE, the City of Broomfield and the City of Westminster. Regulatory approval to release the OU 3 Proposed Plan for public comment was granted on August 7, 1996. The Proposed Plan was released for public comment on August 7, 1996. A public hearing on the OU 3 Proposed Plan was held on September 18, 1996, at the Arvada Center for the Arts and Humanities in Arvada, Colorado. Citizen comments received at the public hearing were recorded; responses to those comments are included in the attached Responsiveness Summary. The public comment period for the OU 3 Proposed Plan ended on October 11, 1996. Written comments on the Proposed Plan were received from the City of Westminster and the City of Broomfield. Responses to these written comments are also included in the attached Responsiveness Summary.

The Scope and Role of OU 3

The IAG established OU 3 as one of sixteen original Operable Units at RFETS; it is the only one of these sixteen OU's that addresses past releases of hazardous substances off RFETS property. The selected remedy in this Corrective Action Decision/Record of Decision (CAD/ROD) is no action. Based upon the results of the OU 3 RFI/RI Report, the IHSS's within OU 3 have been determined to be in a protective state with regard to human health and the environment. Therefore, no remedial action regarding these IHSS's is warranted.

The CAD/ROD, and the RFI/RI report upon which the CAD/ROD and the OU 3 Proposed Plan are based, consider past releases of hazardous substances within the IHSS's in OU 3, the risks that these releases pose to human health and the environment, and the need for action, if any, based upon those risks. The CAD/ROD does not consider potential future releases from RFETS, nor does it consider ongoing monitoring or pollution prevention programs that serve to detect or prevent such future releases. Numerous such programs are currently in place at RFETS, mandated by Federal or State law, or by enforceable compliance agreements. None of these programs is a condition of this CAD/ROD. However, examples of such programs include:

- Point source discharge and stormwater monitoring, for non-radiological parameters; conducted under the Site's National Pollutant Discharge Elimination System (NPDES) permit, issued pursuant to the Clean Water Act;

- Groundwater and surface water monitoring (including stations at the RFETS boundary) for a range of parameters, including plutonium-239/240 and americium-241, conducted pursuant to RFCA requirements;

- Monitoring for radionuclide air emissions to demonstrate compliance with National Emissions Standards for Hazardous Air Pollutants, required by the Clean Air Act;

- Regular inspection and maintenance of RFETS hazardous waste storage and treatment facilities, required by the Site's permit issued under the Colorado Hazardous Waste Act;

- Maintenance of a Spill Prevention, Control and Countermeasures/Best Management Plan, required by the Site's NPDES permit; and,

- Procedures to Prevent Hazards and a Contingency Plan, contained in the Site's hazardous waste permit, issued pursuant to the Colorado Hazardous Waste Act.

RFETS is continuing to commission a panel of experts to conduct basic research on the environmental chemistry of actinides. While again not a condition of this CAD/ROD, the panel is expected to provide information on the potential for actinide migration at RFETS. In turn, this information will be used to guide future remedial and management actions at

RFETS, and help to prevent or mitigate the possibility of off site releases.

Summary of OU 3 Site Characteristics

Geology and Hydrogeology

Surficial geology in OU 3 is characterized by Quaternary Age unconsolidated deposits of four types: pediment and terrace alluvium, slope-wash colluvium, and loess, landslide deposits and valley-fill alluvium. Recognized pediment and terrace alluvium formations in OU 3 include the Verdos Alluvium (weakly cemented boulders, cobbles and coarse sands, located around Standley Lake and Great Western Reservoir), the Slocum Alluvium (cobble gravel and clayey coarse sand with mica, found along Woman Creek and the Smart Ditch), and the Louviers Alluvium (red- to yellow-brown sand, pebbles and cobbles in a clayey silt to sandy matrix, found along Woman Creek). Slope-wash colluvium of Pleistocene age occurs along valley sides on Woman and Walnut Creeks in the western reaches of OU 3 near the RFETS boundary, and Pleistocene loess deposits are found along the higher alluvial terraces south of Standley Lake. Landslide deposits of Pleistocene and Holocene age are most abundant in the Rock Creek drainage. Well records from private wells in OU 3 suggest that in general, surficial deposits in the area range from 15 to about 50 feet in thickness, although landslide deposits along Rock Creek can be up to 100 feet thick.

Bedrock geology in OU 3 is marked by two regional sedimentary formations, the Arapahoe Formation and the Laramie Formation. Both are Cretaceous-age deposits formed by outwash from the Front Range of the Rocky Mountains. The Arapahoe Formation, the uppermost bedrock formation in OU 3, contains primarily claystones and silty claystones as well as some siltstones and sandy conglomerates. The Arapahoe Formation lies unconformably beneath the land surface, and weathering penetrates the Formation to depths between 10 and 40 feet. In the vicinity of RFETS, the Arapahoe Formation has a thickness of up to 50 feet. The Laramie Formation underlies the Arapahoe Formation and consists of two main units, an upper, primarily claystone unit, and a lower unit containing coals and sandstones. The Laramie Formation has a total maximum thickness of about 800 feet, of which the upper unit is 600 to 800 feet thick and the lower unit is about 300 feet thick. The Laramie Formation is underlain by the Fox Hills Sandstone, a regionally important aquifer in the Denver Basin. Recharge to the Laramie-Fox Hills Aquifer takes place along a narrow outcropping west of RFETS along the base of the Front Range.

At RFETS, groundwater in the Rocky Flats Alluvium (the uppermost unit at RFETS, generally absent from OU 3) is recharged by surface precipitation or man-made sources, and flows laterally along the top of the Arapahoe formation, expressing itself as seeps along the upper reaches of Woman, Walnut and Rock Creeks. The low transmissivities of the Arapahoe and Upper Laramie formations effectively preclude deep vertical migration of groundwater (and any associated contaminants) from the shallow aquifer at RFETS. There is, therefore, no direct connection between the shallow groundwater at RFETS and groundwater in OU 3.

While there are numerous private wells known to have been drilled in OU 3, limited information is available in the form of drilling records held by the Colorado Department of Water Resources. Based upon these records, wells in OU 3 were completed in sandstone deposits within (presumably) the Arapahoe or upper Laramie Formations, at depths ranging from 35 to 275 feet.

Surface Water Features

Four main drainages traverse OU 3: Big Dry Creek, Woman Creek, Walnut Creek and Rock Creek. Of these, only Woman Creek and Walnut Creek have significant possibilities of having been affected by activities at RFETS. Woman Creek flows eastward across

RFETS and into OU 3, south of the RFETS industrial area. The Woman Creek drainage contains two impoundments on RFETS. Pond C-1 is a small (1.7 million gallon), on channel pond with little retention capability. Pond C-2 is a larger (22.6 million gallons), off-channel pond that collects water from the south side of the RFETS industrial area via the South Interceptor Ditch. Water from Pond C-2 was previously pumped to the Walnut Creek drainage, where it flowed into the diversion ditch around Great Western Reservoir, but is now pumped directly to Woman Creek.

Woman Creek flowed into Standley Lake until November of 1995, when Woman Creek Reservoir, part of the Standley Lake Protection Project, was completed. The Standley Lake Protection Project was constructed by the City of Westminster using grant funds provided by DOE.

Walnut Creek also flows eastward from RFETS into OU 3, and has two main branches (North and South Walnut Creek) which merge before the creek crosses the RFETS east boundary. The two branches of Walnut Creek on RFETS are impounded by two series of holding ponds (A-1 through A-4 on North Walnut Creek and B-1 through B-5 on South Walnut Creek). On RFETS, Walnut Creek drains the majority of the industrial area, and receives discharges from the RFETS sewage treatment plant. Walnut Creek flowed directly into Great Western Reservoir until 1989, when the City of Broomfield constructed a diversion ditch around the reservoir to lower Walnut Creek.

OU 3 contains four significant surface water impoundments: Great Western Reservoir, Standley Lake, Mower Reservoir and Woman Creek Reservoir. Great Western Reservoir is a 3,200 acre-foot capacity reservoir, located about 1/2 mile east of the RFETS east boundary. It was originally constructed as an irrigation supply reservoir, but which now serves as one of the primary drinking water supplies for the City of Broomfield. The primary source of water to Great Western Reservoir is from Clear Creek, delivered via the Church Ditch.

The Great Western Reservoir Replacement Project was begun in 1991 by the City of Broomfield, and is being funded primarily through a DOE grant. This Project will provide an alternate water supply (from the Windy Gap Project) for the City of Broomfield, as well as transmission and treatment facilities for the new water supply. With the completion of

this Project, expected by the end of 1997, Great Western Reservoir will no longer be used as a drinking water supply, and is expected to revert to its original use as an irrigation supply reservoir.

Standley Lake is a 43,000 acre-foot reservoir which supplies drinking water to the Cities of Westminster, Northglenn, Thornton and Federal Heights as well as irrigation water. Standley Lake is located about 2 miles southeast of the RFETS eastern boundary. Its primary source of water is also from Clear Creek, delivered via the Farmers' Highline Canal, Croke Canal and the Church Ditch.

Mower Reservoir is a relatively small (about 45 acre-feet) agricultural reservoir located between Standley Lake and Great Western Reservoir, about 1,400 feet east of the RFETS east boundary. Mower Reservoir is fed by Mower Ditch, which transports water from Woman Creek from a point within the RFETS boundary. Mower Reservoir was privately owned until December 1995, when it was purchased by the City of Westminister. This purchase was funded by DOE as a Supplemental Environmental Project (SEP) pursuant to the Tolling Agreement, which was appended to the IAG. The Tolling Agreement allowed DOE to fund SEP's in lieu of penalties for violations of the IAG.

Woman Creek Reservoir is an 850-acre-foot detention reservoir that captures and holds Woman Creek flows until they are pumped to the Walnut Creek drainage downstream of Great Western Reservoir. The purpose of Woman Creek Reservoir is to capture any

contaminated water that might leave RFETS via Woman Creek. Woman Creek Reservoir is designed to capture flows up to the anticipated 100-year flood on Woman Creek, and is compartmentalized so as to allow for the sequential capture, testing and release of water from Woman Creek.

Terrestrial and Aquatic Ecology

OU 3's terrestrial ecology has been extensively altered by human activity, especially grazing, agriculture and construction, such that essentially no undisturbed areas remain. The dominant plant community is short-to-mid-grass prairie that has been moderately to heavily grazed. Along the drainages in OU 3 are sparse stands of cottonwoods, mesic grasslands and occasional wetlands along some stream bottoms. Mower Reservoir and the ditch leading to it contain the most well-developed stands of riparian vegetation in the OU 3 study area.

Despite the dissected habitat, a variety of animals reside in, or wander through, OU 3. Notable residents include bull snakes, rattlesnakes, a variety of hawks, black-tailed prairie dogs, coyote and mule deer. Bald eagles are locally common around Standley Lake, especially in winter, and a breeding pair there fledged one young in the spring of 1996.

The Preble's meadow jumping mouse (Zapus hudsonius preblei) is a species that occurs in several stream drainages at RFETS, and which is a candidate for listing as an Endangered Species under the Endangered Species Act. Some marginal habitat for this mouse has been identified in OU 3, along the drainages and around the reservoirs. DOE has not conducted any trapping to specifically confirm or deny the presence of Preble's meadow jumping mouse in OU 3. Trapping conducted by Jefferson County Open Space failed to find the mouse in OU 3 east of RFETS, however.

There are both lotic and lentic aquatic habitats in OU 3. The biotic community in streams is limited to a few, opportunistic species because of low, highly variable stream flows. Of the reservoirs in OU 3, Great Western has the least diverse fish assemblage, consisting primarily of carp, suckers and minnows. Mower Reservoir is stocked with smallmouth

bass. Standley Lake is open for recreation and contains a variety of stocked game fish, including rainbow trout, walleye, catfish and yellow perch. Mower Reservoir is the only one of the three with substantial amounts of emergent and submerged aquatic vegetation. Woman Creek Reservoir has been designed and will be operated to discourage the establishment of fish populations or any other type of aquatic community.

Population and Land Use

Over 2.2 million people live within a 60-mile radius of Rocky Flats. The OU 3 RFI/RI Report estimated that, in 1994, approximately 10,800 people lived within a five-mile radius of RFETS. Most of these people lived in subdivisions located either in Broomfield or in Westminster, especially northeast, east and south of Standley Lake. The nearest school to RFETS is Witt Elementary School, about 2.7 miles to the east. The population near RFETS is projected to increase substantially in coming years, with nearly 18,000 persons expected to live within five miles of RFETS in 2005 and about 24,000 persons expected to live in that area by the year 2015.

Land use in OU 3 immediately east of RFETS, covering most of the lands around and between Great Western Reservoir and Standley Lake is open space. The use of these lands is controlled through zoning restrictions and perpetual land use restrictions contained in existing City of Broomfield and City of Westminster deeds of ownership. These

restrictions make the development of these lands for residential or commercial use very unlikely. These lands include the land which was the subject of the 1975 lawsuit and 1984 settlement agreement, and the portions of IHSS 199 which exhibit the highest soil concentrations of radionuclides in OU 3.

Eastward, beyond the open space lands immediately to the east of RFETS, commercial and recreational development continues to take place at Interlocken, north of the Jefferson County Airport. Further commercial development is anticipated south of the airport, and immediately south of RFETS at Jefferson Center Properties. Continued suburban expansion is also anticipated in the area south and southeast of RFETS, primarily around Standley Lake, and in western Arvada along the 64th Street corridor.

The Nature and Extent of Contamination in OU 3

Contaminants of Concern

The RFI/RI evaluated sampling data in OU 3. Based on these data, DOE, EPA and CDPHE selected Contaminants of Concern (COC's) for OU 3. COC's are those chemicals that may contribute significantly to human health risks and which in turn were fully evaluated in the Human Health Risk Assessment in the RFI/RI Report. COC's were selected according to the toxicity of a given chemical, the frequency of detection in the sampling, a preliminary screening of the risk posed by the chemical and comparisons of concentrations in OU 3 to background concentrations (Background soil and sediment concentrations were determined using data from the Rock Creek Drainage. Reservoir and stream sediments are not directly comparable to one another, owing to the differences in flow regimes. However, a study conducted by DOE in 1994 to determine regional background concentrations of heavy metals and radionuclides demonstrated that concentrations of these substances in the Rock Creek samples were representative of background, and that their use for comparison purposes was appropriate.). COC's were selected by IHSS and by individual environmental medium within each IHSS. Plutonium-239/-240 and americium-241 in soil in IHSS 199, and plutonium-239/-240 in surface sediment in Great Western Reservoir IHSS 200) are the only COC's identified for OU 3.

Soils in OU 3 (IHSS 199)

Three data sets were used in the RFI/RI Report to define the nature and extent of hazardous substances in surface soil in IHSS 199. These were the RFI/RI data set (144 samples collected from 61 ten-acre plots in OU 3), the Remedy Lands data set (47 surface soil samples collected from tilled and untilled portions of the Remedy Lands east of RFETS), and the Rock Creek data set. The Rock Creek data set was used to determine background concentrations of plutonium and americium, against which the other soil data sets were compared. Surface soils in OU 3 were not analyzed for other hazardous substances in OU 3, including beryllium and heavy metals. Surface soil sampling for beryllium and heavy metals in OU 2, immediately upwind of OU 3, showed that no metals were present there at levels above background, leading to the conclusion that additional sampling in OU 3 was not warranted.

The Rock Creek data set indicated that upper-bound background values (the mean plus two standard deviations) were 0.09 picoCuries per gram (pCi/g) for plutonium-239/-240 and 0.04 pCi/g for americium-241. Based on these results, 19 of the 61 samples in the RFI/RI data set and all of the surface soil samples in the Remedy Lands data set had levels of plutonium-239/-240 and/or americium-241 that were above background levels. The highest surface soil level for plutonium-239/-240 (6.468 pCi/g) was recorded in sample U1A from the remedy lands data set. Sample U1A was taken from a location approximately 1,800 feet east of the RFETS east gate, and about 1,500 feet south of the western end of Great Western Reservoir. The highest value of americium-241 (0.52 pCi/g) occurred in sample plot PT14192, located across Indiana Street from the RFETS east gate.

The arithmetic mean of all values in both the RFI/RI data set and the Remedy Lands data set is 0.057 pCi/g for plutonium-239/-240 and 0.017 pCi/g for americium-241.

The RFI/RI report also included a more comprehensive appraisal of the source, extent and distribution of plutonium-239/-240 and americium-241 at and around RFETS. This appraisal considered numerous surface soil data sets collected by a number of researchers on and off RFETS. About 750 surface soil sample points were available to researchers, who used statistical techniques to plot isopleths of plutonium-239/240 and americium-241 soil concentrations in OU 3. This analysis indicated the presence of a plume of elevated concentrations of plutonium and americium in soils extending directly east of the 903 Pad at RFETS, eastward past the RFETS east gate. The analysis also indicates that soil levels drop quickly east of RFETS, and return to background two to three miles east of the RFETS property boundary. Finally, this analysis suggests that windblown dispersal of contaminants from the 903 Pad is the primary source of plutonium and americium in surface soils in OU 3.

To determine the nature and extent of hazardous substances in subsurface soils in OU 3, the RFI/RI included excavation and sampling of eleven trenches, primarily located immediately east of the RFETS boundary. In each trench, ten soil samples were collected along a profile 96 centimeters deep. In all cases, maximum plutonium and americium levels occurred at the soil surface (to 3 cm deep), and decreased rapidly with depth. The arithmetic means for both plutonium and americium in soils below 10 cm deep were less than calculated background concentrations.

Sediments in Great Western Reservoir (IHSS 200), Standley Lake (IHSS 201) and Mower Reservoir (IHSS 202)

The RFI/RI gathered data from 120 samples of surface sediments in the reservoirs and streams in OU 3 as well as 155 subsurface sediment samples from the reservoirs. Additionally, the RFI/RI included data from 114 sediment samples gathered from Standley

Lake and Great Western Reservoir in 1983 and 1984. Surface and subsurface reservoir sediments were analyzed for heavy metals and radiological parameters, and sediments from Mower Reservoir were additionally analyzed for volatile organic compounds. These data were compared to background values for stream sediments. This comparison concluded that plutonium was the only hazardous substance in reservoir sediments that was elevated above background values, and that levels of plutonium were elevated in at least some sediment samples from all three reservoirs.

Concentrations of plutonium in surface sediments were highest in Great Western Reservoir, reaching 3.3 pCi/g, and averaging 0.27 pCi/g. Plutonium levels in Standley Lake peaked at 0.55 pCi/g, and averaged 0.03 pCi/g. The maximum plutonium value in Mower Reservoir was 0.49 pCi/g, with an average of 0.291 pCi/g.

In subsurface sediments, plutonium concentrations were again highest in Great Western Reservoir, reaching a maximum of 4.3 pCi/g at a sediment depth of approximately 18 inches. This sample was taken at the deepest portion of the reservoir, just west of the dam, at a maximum water depth of about 40 feet. A sample taken at this spot during the 1983-1984 sampling had a plutonium activity of 5.3 pCi/g, also at a depth of about 18 inches. The maximum plutonium value in Standley Lake subsurface sediments was 0.38 pCi/g at a sediment depth of about 18 inches, and the maximum plutonium value in Mower Reservoir subsurface sediments was 1.11 pCi/g at a depth of about 6 inches.

The RFI/RI Report concludes that waterborne transport from RFETS was the most likely means of plutonium deposition to Great Western Reservoir sediments, while aeolian transport was the most significant pathway for contaminants to sediments in Mower

Reservoir and Standley Lake. Comparing data gathered during the RFI/RI in 1992, to data gathered in 1983 and 1984, the RFI/RI report finds that, in general, plutonium concentrations in sediments decreased from 10 to 30 per cent in similar locations. The two data sets exhibit strongly similar vertical plutonium profiles, however, indicating that vertical migration of plutonium in reservoir sediments is not occurring.

Plutonium is retained as a COC only in surface sediments in Great Western Reservoir because of the reservoir's somewhat uncertain future in light of the imminent completion of the Great Western Reservoir Replacement Project. Thus, the RFI/RI's Human Health Risk Assessment considers a residential scenario for Great Western Reservoir in the unlikely event that the reservoir is drained at some future time and the land is released for building residences. Such a scenario is not considered likely for either Standley Lake or Mower Reservoir, which in any event have lower plutonium sediment activities than Great Western Reservoir.

Other Environmental Media: Surface Water, Groundwater and Air

As mentioned previously, the only environmental media for which COC's were identified in OU 3 were surface soils and Great Western Reservoir surface sediments. However, the RFI/RI gathered and considered a substantial amount of data from other environmental data, including surface water, groundwater and air.

Surface water sampling concentrated on the three reservoirs in OU 3 and included sampling for radionuclides, metals, major ions, pesticides and volatile organic compounds (the latter being sampled only in Mower Reservoir). Fifteen samples were collected during the RFI/RI from Great Western Reservoir, fourteen samples were collected from Standley Lake, and thirteen samples were collected from Mower Reservoir; samples were collected from July to October 1992. All constituents in all reservoirs were either within background levels or were not detected. The mean plutonium activities for surface water in Great

Western Reservoir, Standley Lake and Mower Reservoir were 0.002, 0.002 and 0.005 pCi/l, respectively. Maximum observed plutonium values for Great Western Reservoir and Standley Lake were 0.005 and 0.009 pCi/l; the highest surface water activity for plutonium was observed in Mower Reservoir, at 0.03 pCi/l. All plutonium activities recorded during the RFI/RI were less than site-specific standards set by the Colorado Water Quality Control Commission (0.03 pCi/l for Great Western Reservoir and Standley Lake, and 0.15 pCi/l for Mower Reservoir).

Two groundwater wells were installed during the RFI/RI, one downstream of Great Western reservoir and one downstream of Standley Lake. These wells evaluated the potential interactions between reservoirs and downgradient groundwater. The only radiological constituents that exceeded the maximum background values were uranium-235 and uranium-238 in individual samples in the well downgradient of Standley Lake. However, the mean values for these and all other radionuclides in both wells were less than the upper-bound mean background values (that is, the 95% upper confidence level, based upon the arithmetic mean of the data).

Groundwater was not extensively monitored in OU 3, apart from the two aforementioned wells. Extensive groundwater monitoring at RFETS, including alluvial wells at the site boundary, has shown that hazardous substances are not migrating off site via shallow groundwater. The Upper Laramie Formation, which underlies RFETS, is sufficiently impermeable and robust so as to provide protection for the regional Laramie-Fox Hills Aquifer. Thus, no mechanism for the off site transport of hazardous substances via the regional aquifer exists.

The evaluations of inhalation risk from plutonium in the RFI/RI report were performed

using data from the Radioactive Air Monitoring Program (RAAMP), and yielded a risk of approximately 1 x 10-6. However, data from the RAAMP were found to have great uncertainties associated with them, owing to the detection limit of the samplers being used. Therefore, RAAMP data were supplemented with ultra-high volume air samplers, which decreased detection limits and the uncertainties encountered in RAAMP samplers. Ultra-high volume sampling yielded average results for plutonium that were approximately 100 times lower than those provided by the RAAMP sampling (1.9 picoCuries of plutonium per cubic meter of air, on average). Wind tunnel studies were also performed to determine the potential for resuspension of particulates in OU 3. The RFI/RI Report concluded that, over the vast majority of OU 3 (that is, undisturbed terrestrial areas), resuspension of particulates from surficial soils and sediments is limited and occurs only rarely. A higher potential for resuspension was observed at disturbed, unvegetated sites such as reservoir shorelines.

Contaminant Fate and Transport

The properties of plutonium and americium, the two COC's identified for OU 3, are such that physical, rather than chemical or biotic, factors predominate in determining methods of transport and the ultimate fate of these two contaminants. The physical factors that have in the past and which continue to determine the distribution of plutonium and americium in OU 3 are:

1) Adsorption -- the binding of the contaminant to particulates, often clays, caused by electrical attraction at the molecular level, which often results in reduction in environmental mobility;

2) Waterborne transport -- the movement of particles and any associated contaminants by moving water (fluvial processes), and their subsequent re-deposition in reservoirs (through lacustrine processes); and,

3) Windborne transport -- the dislodging, transport and subsequent deposition of particles and associated contaminants during high winds.

Plutonium and americium in general do not manifest chemical behavior in the environment that influences their transport or fate. Similarly, there is no known biotic mechanism that would serve to concentrate plutonium or americium in living organisms, nor do concentrations of these elements increase at higher levels of the food chain.

In soils and in surface waters in OU 3 and elsewhere where there are oxidizing conditions, plutonium is present as plutonium dioxide colloids, which are in turn strongly adsorbed onto clay particles. Strongly reducing environments (those with little or no free oxygen) may lessen the affinity of plutonium for clay particles, but the RFI/RI report concluded that this does not significantly affect the mobility of plutonium in OU 3. Basic conditions, above a pH of 9, may also increase the solubility of plutonium, but these conditions were not encountered in OU 3.

Waterborne particulate transport was most significant in OU 3 in transporting sediments from ponds in the Walnut Creek drainage to Great Western Reservoir. Waterborne transport may have also been responsible for movement of some plutonium from soils at RFETS and in OU 3 into the drainages and thence to the three reservoirs. Once in the reservoirs, particles containing plutonium settled out and were deposited in reservoir sediments. There is believed to be no mechanism for transport of plutonium is surface water downstream of the reservoirs in OU 3, based upon stream sediment samples taken from Walnut Creek downstream of Great Western Reservoir, and from Big Dry Creek downstream of Standley Lake.

As mentioned previously, airborne transport of particulates from the 903 Pad at RFETS was the most likely source of plutonium deposition onto surface soils in OU 3, and was probably a source for radionuclides in reservoir sediments as well. Since plutonium shows an affinity for fine particles such as clays, the particles that are most likely to be transported by wind are likely to contain elevated plutonium levels as compared to the soil itself.

Summary Of Site Risks

Human Health Risk Assessment

Following the selection of COC's the RFI/RI Report evaluated the risks posed by these contaminants in the Human Health Risk Assessment (HHRA), one portion of the Report's Baseline Risk Assessment. The HHRA calculated the exposure to COC's under various scenarios, considered the potential toxic effects of the COC's, and then calculated the risks posed by the COC's in OU 3 under each exposure scenario. Risks were then reported as the probability of an individual developing cancer as a result of exposure to OU 3 contamination under one of the scenarios that were evaluated.

The two scenarios evaluated were recreational and residential exposure. The recreational exposure anticipates occasional recreational use of the area (hiking, biking, picnicking, etc.), and assumes that an individual may be exposed to OU 3 contaminants through ingestion and inhalation of soils and through external radiation. The residential exposure scenario assumes exposure pathways through the ingestion of vegetables, milk, and meat raised on the contaminated property, as well as through soil ingestion and inhalation, and

through external radiation. The residential scenario results in higher contaminant exposures, and thus higher calculated risks, than the recreational scenario, primarily due to the much greater exposure times in the residential scenario.

The residential exposure scenario was applied to plutonium and americium in surface soils (IHSS 199) and to plutonium in sediments in Great Western Reservoir (IHSS 200). In IHSS 199, it was assumed that current deed restrictions on property held by Broomfield and Westminster would be lifted, allowing for residential development. In IHSS 200, it was assumed that Great Western Reservoir would be drained and subsequently used for residential development. While both scenarios are considered unlikely, they were evaluated because of the long half-lives of the contaminants involved, the uncertainties surrounding land use planning assumptions far into the future, and because of concerns expressed by local communities. Both scenarios calculated risks associated with reasonable maximum exposures, a set of assumptions that maximizes the individual's presumed exposure to the contaminant, as well as central tendency, a set of assumptions believed to be more representative of the exposures that would be incurred by the average person.

For IHSS 199, risks from both plutonium and americium were calculated and were assumed to be additive. For IHSS 200, only the risks associated with plutonium were calculated, as plutonium was the only COC there. In both IHSS's, the highest contaminant concentration(s) was used in risk calculations. The RFI/RI Report also calculated radiation doses that would be expected as a result of the recreational and residential scenarios described above.

Excess lifetime cancer risk (that is, the incremental additional cancer risk that is incurred through exposure to COC's at OU 3 or any other contaminated site) is calculated by multiplying the average daily chemical intake over a lifetime of exposure by the

contaminant's individual slope factor. For radionuclides, slope factors are the average risk per unit intake or exposure for an individual in a stationary population with mortality rates typical of those in the United States in 1970. EPA guidelines indicate that excess lifetime cancer risks which are within or below the one in ten thousand (1 x 10-4) to one in one million (1 x 10-6) range are considered protective of human health.

For IHSS 199, the highest calculated excess cancer risk, assuming reasonable maximum exposures (RME) under a residential exposure was three in one million (3 x 10-6). Using central tendency, the risk under a residential exposure scenario was two in ten million (2 x 10-7). For the recreational exposure, the excess cancer risk was five in one hundred million (5 x 10-8) using the RME, and three in one billion (3 x 10-9) using central tendency.

For IHSS 200, the highest calculated excess cancer risk employing RME and the residential exposure was nine in ten million (9 x 10-7); the corresponding risk using central tendency was six in one hundred million (6 x 10-8). Using the recreational scenario, the highest risk using RME was one in one hundred million (1 x 10-8), and the risk using central tendency was eight in ten billion (8 x 10-10).

The highest calculated radiation doses for IHSS's 199 and 200 occurred using the RME, assuming a residential exposure scenario. The highest Total Effective Dose Equivalent (TEDE, which incorporates both internal and external radiation dose) for IHSS 199 for an adult was 0.12 millirem per year (mrem/yr); the corresponding TEDE for IHSS 200 is .0065 mrem/yr. These calculated doses can be compared with those recently adopted as part of the RFCA Soil Action Levels Framework, which specifies an action be taken at RFETS at a soil radiation dose level in excess of 85 mrem/year. The doses calculated from plutonium-239/240 and americium-241 in OU 3 can also be compared to those received

from natural background (including radon and cosmic rays) and man-made sources (such as medical x-rays). The average radiation dose in the U.S. is estimated to be about 300 mrem/yr, while the average dose in Colorado may be as much as 700 mrem/yr, owing to the state's higher altitude and relative abundance of naturally occurring radionuclides.

As part of the Baseline Risk Assessment, a qualitative analysis of uncertainties was performed. Some of the uncertainties inherent in the Baseline Risk Assessment are as follows:

- Environmental sampling in OU 3 may not have accurately characterized the amounts or distribution of hazardous substances in OU 3, which could lead to either an overestimation or an underestimation of risk posed by these substances.

- The degree to which exposure models fully reflect the activities and processes that may lead to contact with hazardous substances in environmental media cannot be fully estimated, and this may lead to an overestimation or an underestimation of risk.

- Specific land use assumptions, including development of the area now occupied by Great Western Reservoir, residential development of the Remedy Lands within IHSS 199, and reliance on homegrown meat, milk and vegetables by future residents within OU 3 may not take place. This would serve to overestimate the exposure to hazardous substances in OU 3, and thereby overestimate risk.

- No loss of hazardous substances due to leaching or erosion was considered. Since these processes would lower the concentrations of these substances, this would lead to an overestimation of risk.

• Basic uncertainties exist when applying risk factors to radiation dose or radionuclide uptake. These uncertainties relate to the model used for determining the health effects of radiation exposure, which are based on average risk per unit intake for an individual. These uncertainties could overestimate or underestimate risk.

• A final source of uncertainty is the extrapolation of risks from high doses of radiation (for example, those sustained by atomic bomb survivors or uranium miners) to much lower doses, such as those calculated for OU 3. This uncertainty could overestimate or underestimate risk.

DOE submitted the RFI/RI Report to the Agency for Toxic Substances and Disease Registry (ATSDR), a part of the federal Center for Disease Control, for the purposes of obtaining a Health Consultation. The purpose of the Health Consultation was to obtain an independent evaluation as to whether COC's had been adequately identified in OU 3, the risks to human health posed by releases of hazardous substances in OU 3, and whether the proposal for no remedial action in OU 3 was appropriate considering these risks. The ATSDR concluded that the COC selection process was based on reasonable assumptions, and that none of the constituents present in OU 3 posed public health concerns. Further, the ATSDR Health Consultation stated that no additional activities are needed in OU 3 in order to ensure the public's health.

Ecological Risk Assessment

The Ecological Risk Assessment (ERA) portion of the RFI/RI Report's Baseline Risk Assessment considered plutonium and americium as Potential Contaminants of Concern (PCOC's) for soils in IHSS 199 and in sediments of all three reservoirs. The ERA included field studies of the abundance and distribution of plants and animals in the aquatic

and terrestrial ecosystems within OU 3, collection and analysis of tissue samples for radionuclides, and calculation of hazard quotients using calculated exposures and literature-derived No Adverse Effect Levels. Field and laboratory work showed no indications of adverse effects from plutonium or americium on the ecology of OU 3. The highest calculated hazard quotient for OU 3 was 0.02, for plutonium in Great Western Reservoir sediments. Hazard quotients of less than 1.0 indicate no potential adverse ecological effects.

Conclusions

The excess cancer risks calculated in the HHRA portion of the RFI/RI Report, resulting from exposure to COC's in OU 3, are all within or well below the EPA guidance for protection of human health. Radiation exposures calculated for OU 3 resulting from contamination there were extremely small as compared with both the soil action levels negotiated for RFETS, and as compared with average background radiation doses. The ERA portion of the RFI/RI Report found no actual or predicted adverse effect on OU 3's ecology as a result of the contamination there.

Conditions in OU 3 pose no unacceptable or significant risks to human health or the environment; future unacceptable or significant exposures will not occur there as a result of past contamination. DOE concludes, therefore, that no action is necessary in OU 3 for the protection of human health or the environment.

Implementation of the no action remedy will not result in any irreversible damage to

natural resources. Wetlands will not be injured; flood elevations will not be affected; groundwater will not be affected; and no permanent displacement or loss of wildlife will occur from implementation of the selected remedy. Low levels of hazardous substances will remain in soils and reservoir sediments in OU 3, but at concentrations so low that they pose no threat to human health and the environment, and will not compromise natural resource values. In areas where tilling has taken place under the 1985 Settlement Agreement, there has been substantial damage to the existing plant communities. This damage was subsequently corrected, albeit with some difficulty over the course of several years.

Explanation of Significant Changes

DOE released the Proposed Plan for OU 3 for public comment on August 7, 1996, and held a public hearing on the Proposed Plan on September 18, 1996. The Proposed Plan identified no action as the preferred remedial alternative. DOE reviewed a written comments received during the public comment period, and verbal comments received at the public hearing. Following review of these comments, DOE determined that no significant changes to the remedy, as originally identified in the Proposed Plan, were necessary.

RESPONSIVENESS SUMMARY

Overview

DOE released the OU 3 Proposed Plan for public review and comment on August 7, 1996, and the comment period extended through October 11, 1996. DOE held a public hearing on the OU 3 Proposed Plan on September 18, 1996, at which oral and written comments were solicited. This Responsiveness Summary provides a summary of DOE responses to public comments received during the comment period. DOE considered all comments received in the final selection of the remedial alternative for OU 3.

The following responsiveness summary identifies commentors and their affiliation, if any. Verbatim comments appear in quotes; comments that have been paraphrased or summarized are so noted.

Comments Received During the Public Comment Period and DOE Responses

Commentor #1: Mr. Tom Settle, City of Westminster, Colorado

Comment #1: "Westminster feels it is premature to come to a final decision and closure on this area. It is our belief that the possibility remains for contamination to move off-site during the cleanup process within the site boundaries. We suggest that this process be held open or allowed to be re-visited at some point in the future, after all cleanup is done. It makes sense to us that cleanup decisions be made starting with the worst areas and then moving outward to ensure that the overall cleanup is most effective."

Response to Comment #1: DOE disagrees that issuance of a no-action CAD/ROD is premature, given the extensive investigations into conditions in OU 3 and the assessment of the risks posed by historic releases of hazardous substances. The RFI/RI Report and the CAD/ROD for OU 3, however, deal only with past releases of hazardous substances, and not the potential for future releases by activities at RFETS. DOE recognizes that there is a possibility, however slight, of the off-site release of hazardous substances during cleanup or other site activities. In such a situation, DOE would respond according to its obligations

under the RFCA and according to the statutory mandates contained in CERCLA. DOE is obligated by Federal and State law and by legally binding agreements to maintain an environmental monitoring system designed to detect and help avoid any such releases. In addition, cleanup projects at RFETS will incorporate project-specific environmental monitoring as appropriate, and plans for these projects will be available for public review and comment.

With regard to the suggestion that the process be allowed to be revisited following the completion of all cleanup, DOE intends to issues a Sitewide CAD/ROD following completion of Site cleanup. Among other issues, this document is intended to address any continuing risks posed by the Site to the off-site environment following cleanup.

DOE does not disagree that it makes sense to pursue the cleanup of the most highly contaminated areas at RFETS first. DOE, in consultation with EPA and CDPHE, has developed a priority listing of all IHSS's at RFETS, with the intent to help guide cleanup planning and project selection. Other factors, including budget, IHSS accessibility and the ability to combine similar projects also affect the selection and sequencing of cleanup projects at RFETS. DOE has chosen to pursue a CAD/ROD for OU 3 at this time because

the data in the RFI/RI Report support one, and because DOE is obligated to share its findings on OU 3 with the public, and to act on these findings.

Comment #2: "An important part of the entire cleanup process is establishing the standards by which the decisions are made. The U.S. Environmental Protection Agency (EPA) is in the process of establishing a nationwide soils standard. Since the OU 3 areas air, entirely separated from the plant site, we would urge the application of the new final standard to the OU 3 evaluation process to reinforce to the public that the decisions are appropriate. The final OU 3 Record of Decision (ROD) would have to be delayed in order to accommodate this request. An alternative would be to specify in the ROD that there should be a review of the OU 3 findings based on the new standard when it is promulgated by EPA."

Response to Comment #2: The decision to undertake no action at OU 3 was made based upon an extensive evaluation of the data generated by the RFI/RI, the identified Contaminants of Concern, and the risks posed by past releases of hazardous substances in OU 3. DOE does not believe that it is necessary to delay a CAD/ROD for OU 3 in order to await promulgation of a nationwide soils standard for radionuclides. However, DOE is mindful that a nationwide soils standard, had one been available, would have been an important consideration in the OU 3 CAD/ROD process. Therefore, the OU 3 CAD/ROD will be re-examined at such time as a nationwide soils standard for plutonium and/or americium is promulgated for consistency with such a standard, or on a five-year basis, consistent with CERCLA Section 121. This will be noted in the OU 3 CAD/ROD Declaration.

Comment #3: "In regards to Standley Lake, it is our opinion that the sampling of the reservoir was not done adequately to truly characterize the potential effects of the radiological contaminants which have been deposited there. There are still unanswered questions as to the quantity of Plutonium or Uranium constituents which may be released into the water column during periods of oxygen deficiency at the bottom of the reservoir. These periods can occur twice per year in Standley Lake and can be quite severe, both in oxygen levels and duration. The reduction of other metals back into the water column has already been well documented. Similar problems in Pond C-2 have been discussed in public meetings at various times in the past."

Response to Comment #3: The sampling of surface water in Standley Lake did not detect plutonium or uranium in the water column at concentrations that would be indicative of the

remobilization of these contaminants as a result of reducing conditions at or near the bottom of Standley Lake. The RFI/RI Report concludes that, even under reducing conditions, the adsorption of plutonium onto clay particles is not fully reversible. In addition to the water sampling results referenced in the RFI/RI Report, monthly sampling of these constituents in Standley Lake confirms their continued presence at very low levels, consistently below site-specific water quality standard promulgated by the Colorado Water Quality Control Commission. While Standley Lake may experience regular periods of oxygen deficiency at depth, DOE believes that the large body of water quality data available from Standley Lake does not support the hypothesis that uranium or plutonium are being remobilized from sediments in quantities that pose any concern to human health or the environment.

Commentor #2: Mr. Tim Holeman, City of Broomfield (note: the following are responses to written comments submitted by Mr. Holeman on behalf of the City)

Comment #1: "In light of DOE's use of conservative health risk scenarios and the risk associated with draining and dredging the reservoir, Broomfield believes that leaving the sediments untouched in the short-term is consistent with its short-term future use of the reservoir as a water reuse facility."

Response to Comment #1: DOE did not specifically evaluate a scenario in which Great Western Reservoir would be used for water reuse, as such a plan had not been developed at the time that the RFI/RI Report was being written. DOE did strive to employ the most conservative foreseeable use scenarios in evaluating the risks posed by Great Western reservoir sediment contamination. DOE cannot comment specifically on Broomfield's plans for future reservoir uses. The RFI/RI Report considered that Great Western Reservoir would be retained as a drinking water source. Even under this conservative scenario, no constituents were identified as Contaminants of Concern, because of the low concentrations of hazardous substances found in the waters of Great Western Reservoir, and the correspondingly low risks posed by these substances.

Comment #2: "Broomfield is not satisfied that leaving residual plutonium in the sediment, particularly the shoreline sediment, is an appropriate long-term solution. Regular review of sediment contamination levels and remedial alternatives should be a condition of a no-action alternative."

Response to Comment #2: DOE believes that leaving contaminated sediments in place in Great Western Reservoir is not inconsistent with any future use scenario because of the low risks that these sediments have been calculated to pose. Therefore, that review of remedial alternatives is not appropriate. The undertaking of any remediation is not supported by the findings of the RFI/RI Report. However, DOE believes that it is appropriate to re-examine a no action alternative for OU 3 at such time as a national standard for radioactive soil contamination is promulgated by the EPA. If a nationwide standard is set such that remediation would be required in OU 3, the feasibility of various remedial alternatives would be examined at that time.

Comment #3: "Broomfield believes that additional feasibility research into alternatives to 'no action' should be conducted. For instance, are there cost effective ways to remove 'hot spots' in the bottom of the reservoir, on the shoreline, and on the hillside? In the absence of a formal feasibility under CERCLA, DOE should conduct a future review of plutonium health risk and the prospects of using innovative technology to remove even residual quantities of plutonium - particularly along the Great Western Shoreline. What activities is DOE undertaking to locate innovative soil washing techniques?"

Response to Comment #3: As stated earlier, based upon the results of the RFI/RI Report, the risks posed by OU 3 are so low that evaluation of remedial alternatives is unwarranted. With regard to health risk evaluation, DOE has asked the Agency for Toxic Substances and Disease Registry (an agency of the federal Center for Disease Control) to provide DOE with an independent review of the OU 3 RFI/RI Report conclusions in the form of a Health Consultation. This Health Consultation is attached, and supports the RFI/RI Report's conclusion that no action is appropriate in OU 3. With regard to innovative technologies, such as soil washing, to remove residual plutonium in soils, DOE is planning to investigate technologies that would make removal of on-site soils effective and efficient. In the event that soil standards are promulgated at some future time, and a review of the no action alternative in this CAD/ROD indicates that remedial action is necessary to protect human health and the environment, the results of the on-site technology selection process would be available to assist in such a circumstance.

Comment #4: "Future cleanup activities upstream could substantially alter the long-term prospect of plutonium loading in the Walnut Creek Drainage and the reservoir. DOE should conduct additional modeling and documentation of the prospect for future loading. Ongoing studies regarding plutonium mobility and transport must be evaluated to document

the likelihood of mass loading on an annual basis. Additional analysis of the plutonium solubility will also impact sediment loading issues?"

Response to Comment #4: There are no current or future plans to conduct modeling of future plutonium loadings into Great Western reservoir. DOE does plan, however, to conduct monitoring of off-site discharges to determine concentrations of plutonium and other contaminants in waters leaving RFETS. Such monitoring will be conducted pursuant to the requirements of the RFCA, as well as other statutory and regulatory requirements. DOE will also conduct environmental monitoring, as appropriate, in conjunction with individual on-site cleanup actions.

Comment #5: "Recent alterations in DOE's process water management program - particularly the Interceptor Trench waters - have substantially changed the assumptions made in the RI regarding releases into Great Western. DOE should reassess its assumptions regarding downstream release in light of new budget priorities and the release of the Ten Year Plan."

Response to Comment #5: The RFI/RI Report considers the risks posed by past releases of hazardous substances in OU 3 and determines the need for action, if any, based upon those risks. The RFI/RI Report for OU 3 makes no assumptions regarding ongoing alterations to the RFETS water management program. Ongoing water management at RFETS is governed by a number of statutory controls and regulatory agreements. Of particular note is the RFETS Integrated Water Management Plan, being prepared pursuant to the RFCA. The City of Broomfield (along with other entities such as EPA, CDPHE, the U.S. Fish and Wildlife Service and the Cities of Westminster, Thornton and Northglenn) has been an active participant in the development of this Plan. The RFETS Integrated Water Management Plan will be reviewed annually.

Comment #6: "As DOE undertakes key CERCLA/RCRA decision-making processes, the potential impacts to the Walnut Creek Drainage and Great Western remain unclear. DOE should document the specific future decision-making points where it will re-evaluate the wisdom of a 'no-action' alternative. For instance, will the final CAD/ROD for the entire site include off-site OU's? What is the process of a five-year review anticipated under CERCLA? What is the impact of EPA's future promulgation of a soil radiation standard?"

Response to Comment #6: Section 121(c) of CERCLA (42 USC 9621), which provides for the five-year review process, states: "If the President selects a remedial action that

results in any hazardous substances, pollutants or contaminants remaining at the site, the President shall review such remedial action no less often than each 5 years after the initiation of such remedial action to ensure that human health and the environment are being protected by the remedial action being implemented." Consistent with this Section, the OU 3 CAD/ROD will be reviewed in light of a soil radiation standard promulgated at some future time. If a future standard is sufficiently stringent such that additional action at OU 3 may be required, DOE will evaluate such additional actions consistent with its responsibilities under CERCLA and the RFCA, and the action ultimately selected would be subject to public review prior to implementation. The final CAD/ROD for the entire site will consider the potential impacts of on-site activities to off-site areas in reaching a final decision.

Comment #7: "DOE should demonstrate that existing levels of residual plutonium or potential future releases into the soil and sediments of the reservoir do not jeopardize the value and usefulness of this important City asset."

Response to Comment #7: The RFI/RI Report concludes that the risks posed by residual levels of contamination in OU 3, even under very conservative use scenarios, justify taking no action there. DOE believes that this conclusion is appropriate, well-documented, and protective of human health and the environment. As stated previously, the RFI/RI Report does not consider potential future releases of hazardous substances in OU 3.

Comment #8: "How will a 'no action' level impact the 1985 lawsuit settlement between landowners and DOE, and the third party beneficiary including the City, regarding soils cleanup? The City is not convinced that the proposed action meets the spirit and intent of the 1985 settlement."

Response to Comment #8: The RFI/RI Report meets the spirit and intent of the 1985 settlement by determining the risks posed by past releases of hazardous substances in OU 3. The RFI/RI Report demonstrates that these past releases pose so little risk to human health and the environment that no remedial action is warranted.

Commentor #3, Ms. Paula Elofson-Gardine, Environmental Information Network (NOTE: the following comments were submitted as oral comments during the public hearing on September 18, 1996. They have been excerpted and summarized from the public hearing transcripts.)

Comment #1: With the very high winds that we have here, in excess of 100 miles per hour, our contention is that the majority of releases have been blown far beyond the perimeter monitors and far out into the communities. So we feel that a lot of the sampling that has gone on too close to the Plant has not tracked past releases well.

Response to Comment #1: Figure 4-6A of the RFI/RI Report shows concentrations of plutonium in surface soils at RFETS and in OU 3. This Figure uses the "Exhaustive Data Set," that is, the data set that incorporates the findings of historic studies as well as data collected specifically for the RFI/RI Report. Figure 4-6A illustrates that the highest surface soil levels of plutonium occur near the 903 Pad at RFETS, and that levels drop quickly and significantly to the east and south of RFETS. For the most part, samples taken two to three miles from RFETS had plutonium contents that were below the calculated background levels of 0.09 pCi/g. Based upon these data, DOE believes that plutonium distribution in OU 3 soils has been well-defined. DOE also believes that there has been no off-site release of plutonium that has been sufficiently large so as to warrant remedial action.

Comment #2: I haven't seen much tracking of americium, which is a daughter product of plutonium. We would like to see a much broader aerial gamma survey done of the whole area, for example, parts of Westminster, such as Countryside, Walnut Creek, perhaps a little farther out to the south of Standley Lake, Leyden, and northwest Arvada. We feel that these areas have been overlooked for decades and are the maximally exposed communities from the major accidents and releases at the facility.

Response to Comment #2: Figure 4-6B in the RFI/RI Report shows concentrations of americium in surface soils at RFETS and in OU 3. Similar to the plutonium data referred to in the foregoing response, Figure 4-6B shows the highest concentrations of americium in soils near the 903 Pad at RFETS, with levels dropping quickly east and south of there. Levels of americium in surface soils drop to below background (calculated at 0.04 pCi/g) within two to three miles of RFETS. DOE believes that these data adequately define the distribution of americium in OU 3, and that additional aerial gamma surveys for americium are not needed. As with plutonium, DOE believes there are no off-site levels of americium in soils that warrant remedial action.

Comment #3: We feel that since there is still remediation to occur at the Site, in addition to dismantling or tearing down buildings, there is still a great risk to the community of migration of contaminants off site, and that this is not well addressed in terms of recontamination of OU 3. This should be pursued as an alternative risk pathway workup with respect to OU 3 RI/FS, and the final decision.

Response to Comment #3: The OU 3 RFI/RI, and the CAD/ROD, address only past releases of hazardous substances to OU 3. RFETS has a number of environmental monitoring and pollution prevention programs, which are mandated by law or by enforceable agreement, designed to help detect and avoid any future releases; these programs are referenced in the CAD/ROD. Future remedial actions at RFETS, as well as building demolition, will incorporate project-specific environmental monitoring that will be designed to detect and avoid releases from these projects.

<IMG 97196C>